11-12-14

¼ SIZE

8.4 Perimeter Erosion Barrier, Special
11.4 Concrete Curb (Special)
12.4 Concrete Curb (Special) (Adjacent to Resurfacing)
13.4 Combination Concrete Curb & Gutter, Type ____, Special
15.4 Gutter Outlet Adjacent to Stabilized Shoulders
16.4 Concrete Gutter, Type A, with Flume
17.4 Catch Basins or Inlets to be Adjusted or Reconstructed
18.4 Curb & Gutter Outlet, Special
19.4 Riprap at End Sections
19.4a Concrete Revetment Mat at End Sections
20.4 Grading Around Wingwalls
21.4 Aggregate Ditch for Flexible Ditch Lining
23.4 Detail of Hot-Mix Asphalt Shoulder at Guardrail
23.4a Hot-Mix Asphalt Shoulder
24.4 Pavement Breaking Detail
27.4 Concrete Headwalls for Pipe Drains
28.4 Cast-in-Place Reinforced Concrete End Sections
29.4 Silicone Joint Seal (Concrete Details)
30.4 Stone Wells, Special
31.4 Parking Blocks
32.4 Pavement Patching for Hot-Mix Asphalt Surfaced Pavement
33.4 Pavement Patching Detail
34.4 Thrust Block Details
35.4 Sidewalk and Driveway Pavement Pay Areas
36.4 Concrete Gutter, Type A (Special)
37.4 Delineator and Post Orientation
38.4 Edge of Pavement Repair
40.4 Road Closed to Oversized Loads
43.4 Required Cold Milled Surface Texture
44.4 Slab Movement Detection Device
46.4 Aerial Speed Check Zones
50.4 Typical Benching Detail on Existing Embankment
63.4 Land Section & Reference Markers
69.4 Disabled Symbol
70.4 Tree Wall
71.4 Detail of Concrete Steps
79.4 Inlets, Special, No. 3
79.4a Inlets, Special, No. 4
79.4b Inlets, Special, No. 5
79.4c Inlets, Special, No. 6
79.4d Inlets, Special, No. 7
79.4e Inlets, Special, No. 8
79.4f Nose Type for Inlet Top Slab
79.4g Inlets, Special, No. 3, 4, 5, 6 Reinforcement Detail
79.4h Inlets, Special, No. 7 & 8 Reinforcement Detail
80.4 Inlets to be Reconstructed with New Standard 542546 Frame & Grate
83.4 Grate, Special
87.4 Typical Median Crossover Closure (with Emergency Opening)
88.4 Drain for Aggregate Bases in Urban Areas
91.4 Rumble Resurfacing
96.4 Drain for Aggregate Base Course
97.4 Subgrade Replacement
98.4 Typical Median Crossover Closure
99.4 Stop Line Sign for Temporary Signals

¼ Size District 2 Standards

11-12-14

8.4	This can be used on Smart & 3P resurfacing projects to maintain a maximum 9% cross slope on the aggregate shoulder in front of existing guardrail. The guardrail could also be removed and re-erected or replaced if it is extremely tipped, out of alignment, damaged, not to current standards, or the height is more than 3" high or low from the initial standard used to install it. Smart projects are allowed up to 15% of the total contract cost for spot safety improvements. 3P projects can also have spot safety improvements, but both projects require BDE approval. Include pay items for Steel Plate Beam Guardrail, Type A (Special), and Aggregate Wedge Shoulder, Type B.
11.4, 12.4 & 13.4	These can be used when a new median or curb & gutter is placed on bare concrete pavement. This isn't used much because the first thing necessary is bare concrete, and there isn't much bare concrete in our District.
15.4	This is used to replace existing gutter outlets adjacent to a HMA shoulder. District 2 doesn't construct new gutter adjacent to stabilized shoulders; curb & gutter is used. Therefore, when curb & gutter is constructed adjacent to a stabilized shoulder, use Highway Standard 606101.
16.4	This is a specialized gutter outlet. Do not use this on curb & gutter. An example of when it would be used is to outlet the gutter over the top of a culvert headwall.
17.4	Use this standard for adjustment of catch basins or inlets.
18.4	This is a specialized curb & gutter outlet. This can be used when there is a ditch behind the curb & gutter and there aren't any inlets with frame & grate or Winnebago's in the curb & gutter.
19.4	Use this when RIPRAP is required at culvert end section.
19.4a	Use this when concrete revetment mat is required at an end section. There is a table on the standard which needs to be filled out.
20.4	Use this on across road culverts that have wingwalls that are not parallel with the culvert. This is a guide for the Resident Engineer & Contractor on how to construct the dirt around wingwalls.
21.4	If riprap is needed in ditches to control erosion, use this standard. Specify the pay item for Class A3 or A4. Add the dimensions to the typical section. The height of the riprap on the side slopes should extend approximately 6" higher than the computed depth of water in the ditch.
23.4	Use this on projects where guardrail will be installed before the surface course is placed. This allows the guardrail to be installed and the shoulder resurfaced to the post so the posts do not have to be removed and re-erected. For example, staged bridge projects require guardrail to be installed for Stage 2, but all of the surface course is placed after the bridge is completed. If new HMA shoulders are constructed and guardrail will be installed after the HMA shoulder is installed, use District Standard 23.4a.
23.4a	Use this for new HMA shoulders. If guardrail will be installed before the surface course is placed, like on staged bridge projects, use District Standard 23.4.

24.4 Use this on projects with large changes in vertical alignment from the existing pavement to a new full depth pavement. This will require a thick resurfacing taper, pavement breaking, and variable depth subbase granular material.

27.4 Use this if the underdrain behind the bridge abutment will outlet into the riprap on the bridge cone. If not, use Highway Standard 601101.

28.4 Use this if storm sewer or field tile outlets through the backslope of the ditch. This can also be used for Cast-in-Place Reinforced Concrete End Section 8” or 10”.

29.4 Include this standard if #17 Polymer Concrete is checked on the Recurring Special Provision check sheet.

30.4 This can be used in sandy soils to drain areas with poor drainage or no outlets. Materials must take soil borings to determine if the stone well will function properly.

31.4 This can be used in parking lots or for diagonal parking if there isn’t a curb or curb & gutter.

32.4 Use this standard for peek-a-boo patching. Peek-a-boo patching is used to remove and replace the existing HMA on top of concrete pavement, up to a maximum of 8” thick.

33.4 Use this standard for pavement patching when the existing HMA overlay thickness is 8” or thicker.

34.4 Include this when constructing new water mains, or moving or relocating fire hydrants. Do not include this for the thrust blocks on Highway Standards 609001, 609006, or 610001.

35.4 Use this standard in urban areas when removing and replacing sidewalk and driveway pavements.

36.4 When constructing concrete gutter, District 2 has a flat bottom gutter which is easier to construct. Do not include Highway Standard 606101. For gutter inlets, include #20.2 Standard Inlet for Type A Gutter (Special), and for outlets include #15.4 Gutter Outlet Adjacent to Stabilized Shoulder.

37.4 Include when installing new delineators. The purpose of rotating the post 180° is to give more support for the delineators so it doesn’t break off.

38.4 Include this standard on 3P projects when there are areas along the edge of pavement that are badly deteriorated.

40.4 Include in projects where the clear width through a work zone with temporary concrete will be 16.0 feet or less.

43.4 Include this standard if #13 HMA Surface Correction is checked on the Recurring Special Provisions check sheet. This milling is for surface corrections that will not be resurfaced. To date this has not been used in District 2.

44.4 Include this standard if #12 Subsealing of Concrete Pavements is checked on the Recurring Special Provisions check sheet. This is used with the pay items Dry Grout Solids and Holes Drilled. To date this has not been used in District 2.

46.4	This is used when replacing existing aerial speed check zones on resurfacing projects. Field check the project to determine if any exist.
50.4	Include this when adding embankment on an existing slope that is 4' high or more.
63.4	Include this if Land Sections or ¼ Section Corners will be disturbed. This applies to projects where earth will be moved, not Smart or 3P resurfacing. Check with Land Acquisition for the existing section locations.
70.4	This can be used to save a tree on a slope that will be excavated. Usually there is a commitment in the project report to save a tree that requires a tree well.
71.4	Include this detail for installing or replacing steps adjacent to sidewalk.
79.4 79.4a 79.4b 79.4c 79.4d 79.4e 79.4f 79.4g 79.4h	These inlets, known as Winnebago's. No. 3 & 4, can be used with storm sewer up to 36" diameter, No. 5 & 6 can be used with storm sewer up to 24" diameter, No. 7 can be used with storm sewer up to 48" diameter, and No. 8 can be used with storm sewer up to 60" diameter. No. 4 & 6 have open backs for drainage behind the inlets. Do not use Winnebago's with curb & gutter with gutter flags less than 24", it makes the cross slope of the gutter flag too steep. This can be dangerous for bicyclists, or people stepping off of the curb. Instead, use an inlet with a frame & grate to fit the curb & gutter. When using 79.4, 79.4a, 79.4b, or 79.4c, also include 79.4f & 79.4g. When using 79.4d & 79.4e, also include 79.4f & 79.4h.
80.4	This can be used to lower an existing 3' x 3' median inlet.
83.4	Use this to replace broken grates or to replace a grate that isn't bicycle safe. Measure the existing grate to ensure this will fit.
87.4	Use this on permanent median crossovers where an emergency opening is needed. If an emergency opening isn't needed, use District Standard 98.4. Check with Operations to see if an opening is needed.
88.4	Use this in urban areas with new pavement, subbase, and storm sewer. The purpose of this is to drain the subbase.
91.4	This is usually used to replace existing rumble strips in the traffic lane before stop signs. It can also be used at new locations to reduce accidents.
96.4	Use this on new pavements with subbase where there will be ditches. Place one in all low points and others at approximately 250' intervals.
97.4	Include this for full depth patching. The quantity for subgrade replacement will be approximately 10-20% of the area of the full depth patches.
98.4	Use this on permanent median crossovers where an emergency opening is not needed. If an emergency opening is needed, use District Standard 87.4. Check with Operations to see if an opening is needed.
99.4	Include this when using Traffic Control and Protection Standard 701316 or 701321.

PERIMETER EROSION BARRIER, SPECIAL

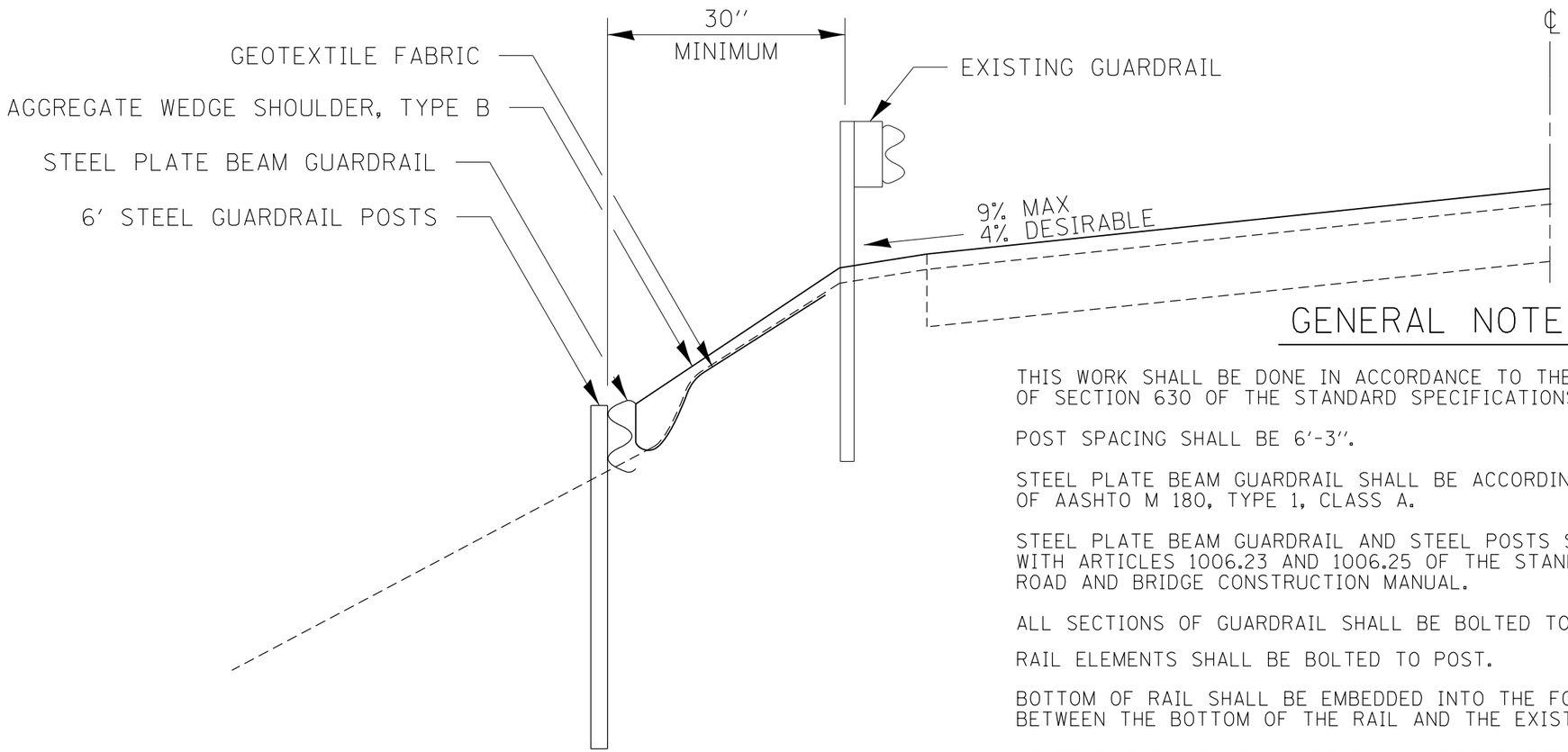

GENERAL NOTES

THIS WORK SHALL BE DONE IN ACCORDANCE TO THE APPLICABLE PORTIONS OF SECTION 630 OF THE STANDARD SPECIFICATIONS.

POST SPACING SHALL BE 6'-3".

STEEL PLATE BEAM GUARDRAIL SHALL BE ACCORDING TO THE REQUIREMENTS OF AASHTO M 180, TYPE 1, CLASS A.

STEEL PLATE BEAM GUARDRAIL AND STEEL POSTS SHALL BE IN ACCORDANCE WITH ARTICLES 1006.23 AND 1006.25 OF THE STANDARD SPECIFICATIONS FOR ROAD AND BRIDGE CONSTRUCTION MANUAL.

ALL SECTIONS OF GUARDRAIL SHALL BE BOLTED TOGETHER.

RAIL ELEMENTS SHALL BE BOLTED TO POST.

BOTTOM OF RAIL SHALL BE EMBEDDED INTO THE FORESLOPE UNTIL NO GAP EXISTS BETWEEN THE BOTTOM OF THE RAIL AND THE EXISTING GROUND.

GEOTEXTLIE FABRIC SHALL BE PLACED BEHIND THE RAIL ELEMENT AND ON THE GROUND BEHIND THE EXISTING GUARDRAIL BEFORE PLACING THE AGGREGATE WEDGE SHOULDERS. THE INSTALLATION AND MATERIAL FOR GEOTEXTILE FABRIC SHALL BE ACCORDING TO SECTION 210 OF THE STANDARD SPECIFICATIONS.

AT LOCATIONS WHERE THERE ARE GAPS UNDER THE RAIL ANOTHER RAIL ELEMENT SHALL BE PLACED BELOW THE FIRST RAIL AND BOLTED TO IT. THE ADDITIONAL RAIL ELEMENTS WILL BE PAID AT THE CONTRACT UNIT PRICE PER FOOT FOR STEEL PLATE BEAM GUARD RAIL, TYPE A (SPECIAL).

STEEL PLATE BEAM GUARDRAIL, 6' STEEL GUARDRAIL POSTS, AND GEOTEXTILE FABRIC SHALL BE PAID FOR AT THE CONTRACT UNIT PRICE PER FOOT FOR PERIMETER EROSION BARRIER, SPECIAL.

AGGREGATE SHALL BE PAID FOR AT THE CONTRACT UNIT PRICE PER TON FOR AGGREGATE WEDGE SHOULDER, TYPE B.

PLOT DATE = Thu Nov 13 11:31:39 2014

REVISED - 9-16-11	REGION 2 / DISTRICT 2 STANDARD				F.A. RTE.	SECTION	COUNTY	TOTAL SHEETS	SHEET NO.
REVISED -									
REVISED -							CONTRACT NO.		
REVISED -	SCALE: 1.0000 '/ in.	SHEET NO. OF SHEETS	STA.	TO STA.	FED. ROAD DIST. NO.	ILLINOIS	FED. AID PROJECT		

CONCRETE CURB (SPECIAL)

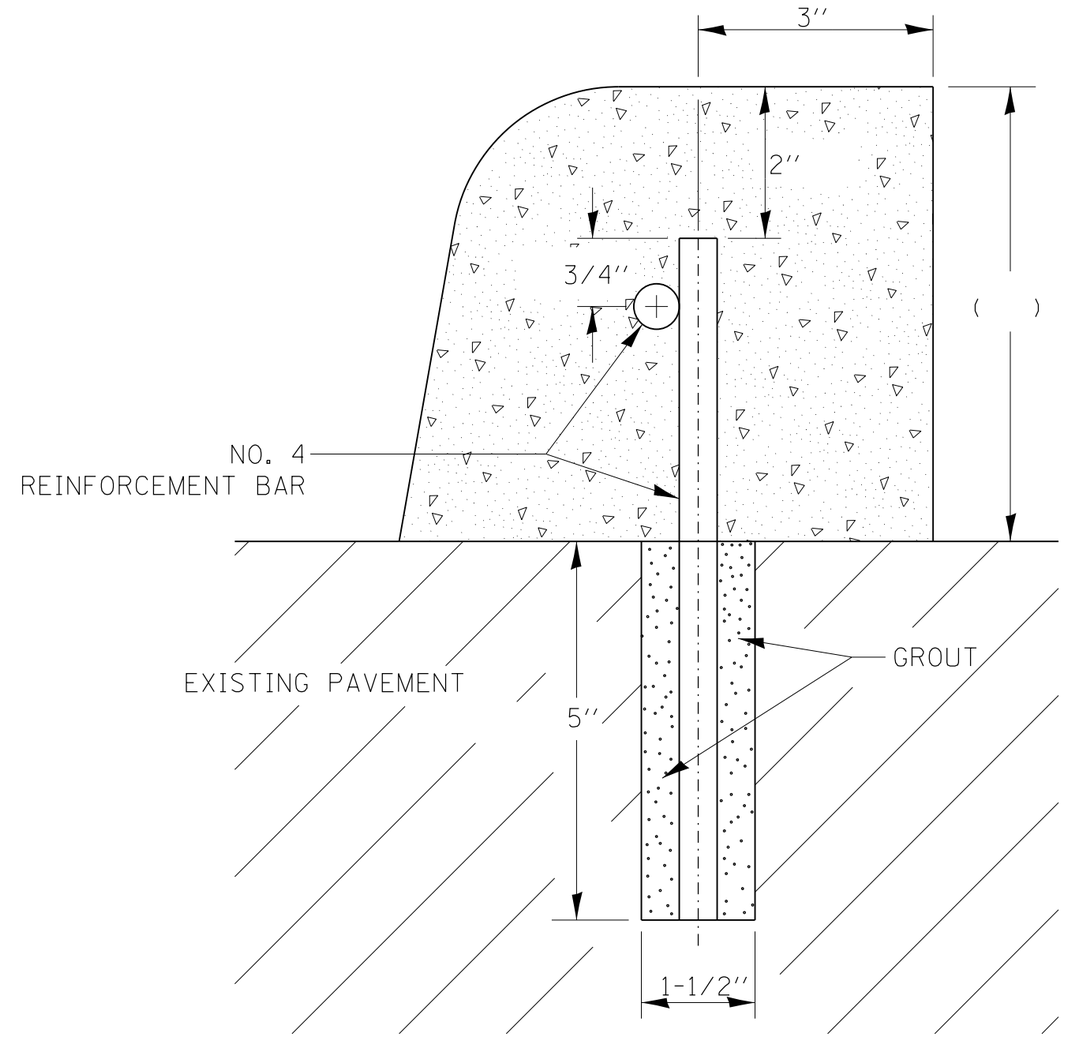

CONCRETE CURB (SPECIAL) SHALL BE CONSTRUCTED IN ACCORDANCE WITH SECTION 606 OF THE STANDARD SPECIFICATIONS, SUPPLEMENTAL SPECIFICATIONS, STANDARD 606001 AND THIS DRAWING.

CLASS SI CONCRETE SHALL BE USED THROUGHOUT.

HOLES 1-1/2''Ø AND 5'' DEEP SHALL BE DRILLED IN THE EXISTING CONCRETE PAVEMENT AT 5'-0'' CENTERS. NO. 4 REINFORCEMENT BARS ( ) LONG SHALL BE GROUTED IN THE HOLES AND A NO. 4 REINFORCEMENT BAR SHALL BE INSTALLED LONGITUDINALLY IN THE CURB.

JOINTS OF A TYPE SIMILAR TO THAT IN THE UNDERLYING PAVEMENT (EXPANSION OR CONTRACTION) SHALL BE INSTALLED IN THE CONCRETE CURB IN ALIGNMENT WITH THE JOINTS IN THE PAVEMENT.

THE COST OF ALL MATERIALS AND LABOR REQUIRED TO INSTALL THE JOINTS AND REINFORCEMENT BARS IN THE CURB SHALL BE INCLUDED IN THE CONTRACT UNIT PRICE FOOT FOR CONCRETE CURB (SPECIAL).

ALL DIMENSIONS ARE IN INCHES UNLESS OTHERWISE NOTED.

PLOT DATE = Thu Nov 13 11:31:40 2014

REVISED - 6-27-14	REGION 2 / DISTRICT 2 STANDARD				F.A. RTE.	SECTION	COUNTY	TOTAL SHEETS	SHEET NO.
REVISED - 9-16-11									
REVISED -							CONTRACT NO.		
REVISED -	SCALE: 1.0000 '/ in.	SHEET NO.	OF	SHEETS	STA.	TO STA.	FED. ROAD DIST. NO.	ILLINOIS	FED. AID PROJECT

CONCRETE CURB (SPECIAL)
(ADJACENT TO RESURFACING)

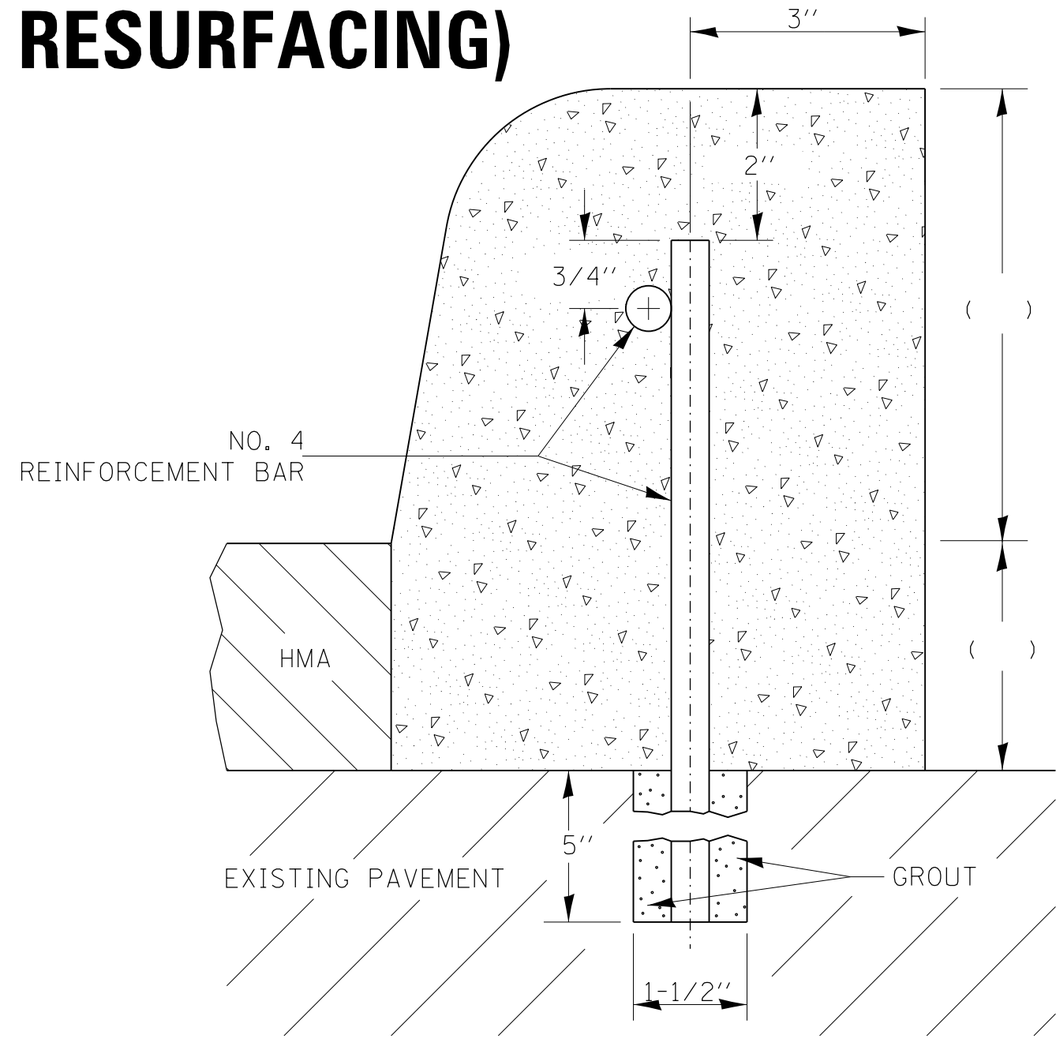

CONCRETE CURB (SPECIAL) SHALL BE CONSTRUCTED IN ACCORDANCE WITH SECTION 606 OF THE STANDARD SPECIFICATIONS, SUPPLEMENTAL SPECIFICATIONS, STANDARD 606001 AND THIS DRAWING.

CLASS SI CONCRETE SHALL BE USED THROUGHOUT.

HOLES 1-1/2''Ø AND 5'' DEEP SHALL BE DRILLED IN THE EXISTING CONCRETE PAVEMENT AT 5'-0'' CENTERS. NO. 4 REINFORCEMENT BARS ( ) LONG SHALL BE GROUTED IN THE HOLES AND A NO. 4 REINFORCEMENT BAR SHALL BE INSTALLED LONGITUDINALLY IN THE CURB.

JOINTS OF A TYPE SIMILAR TO THAT IN THE UNDERLYING PAVEMENT (EXPANSION OR CONTRACTION) SHALL BE INSTALLED IN THE CONCRETE CURB IN ALIGNMENT WITH THE JOINTS IN THE PAVEMENT.

THE COST OF ALL MATERIALS AND LABOR REQUIRED TO INSTALL THE JOINTS AND REINFORCEMENT BARS IN THE CURB SHALL BE INCLUDED IN THE CONTRACT UNIT PRICE FOOT FOR CONCRETE CURB (SPECIAL).

ALL DIMENSIONS ARE IN INCHES UNLESS OTHERWISE NOTED.

PLOT DATE = Thu Nov 13 11:31:41 2014

REVISED - 6-27-14	REGION 2 / DISTRICT 2 STANDARD			F.A. RTE.	SECTION	COUNTY	TOTAL SHEETS / SHEET NO.
REVISED - 9-16-11							
REVISED -						CONTRACT NO.	
REVISED -	SCALE: 1.0000 '/ in.	SHEET NO. OF SHEETS	STA. TO STA.	FED. ROAD DIST. NO.	ILLINOIS	FED. AID PROJECT	

COMBINATION CONCRETE CURB & GUTTER, TYPE , SPECIAL

COMBINATION CONCRETE CURB AND GUTTER, TYPE SPECIAL SHALL BE CONSTRUCTED IN ACCORDANCE WITH SECTION 606 OF THE STANDARD SPECIFICATIONS, SUPPLIMENTAL SPECIFICATIONS, STANDARD 606001 AND THIS DRAWING.

HOLES 1-1/2'' Ø AND 5'' DEEP SHALL BE DRILLED IN THE EXISTING CONCRETE PAVEMENT AT 5'-0'' CENTERS. NO. 4 REINFORCEMENT BARS '' LONG SHALL BE GROUTED IN THE HOLES AND A NO. 4 REINFORCEMENT BAR SHALL BE INSTALLED LONGITUDINALLY IN THE CURB.

JOINTS OF A TYPE SIMILAR TO THAT IN THE UNDERLYING PAVEMENT (EXPANSION OR CONTRACTION) SHALL BE INSTALLED IN THE CONCRETE CURB AND GUTTER IN ALIGNMENT WITH THE JOINTS IN THE PAVEMENT.

GUTTER FLAG 12'' OR GREATER IN WIDTH SHALL BE REINFORCED WITH WELDED FABRIC, 6 x 6 MESH NO. 4 WIRES, NOT WEIGHING LESS THAN 58 LBS/100 SQ. FT.

THE COST OF ALL MATERIALS AND LABOR REQUIRED TO INSTALL THE JOINTS, REINFORCEMENT BARS AND REINFORCEMENT FABRIC IN THE CURB AND GUTTER SHALL BE INCLUDED IN THE CONTRACT UNIT PRICE PER FOOT FOR COMBINATION CONCRETE CURB AND GUTTER, TYPE , SPECIAL.

CLASS SI CONCRETE SHALL BE USED THROUGHOUT.

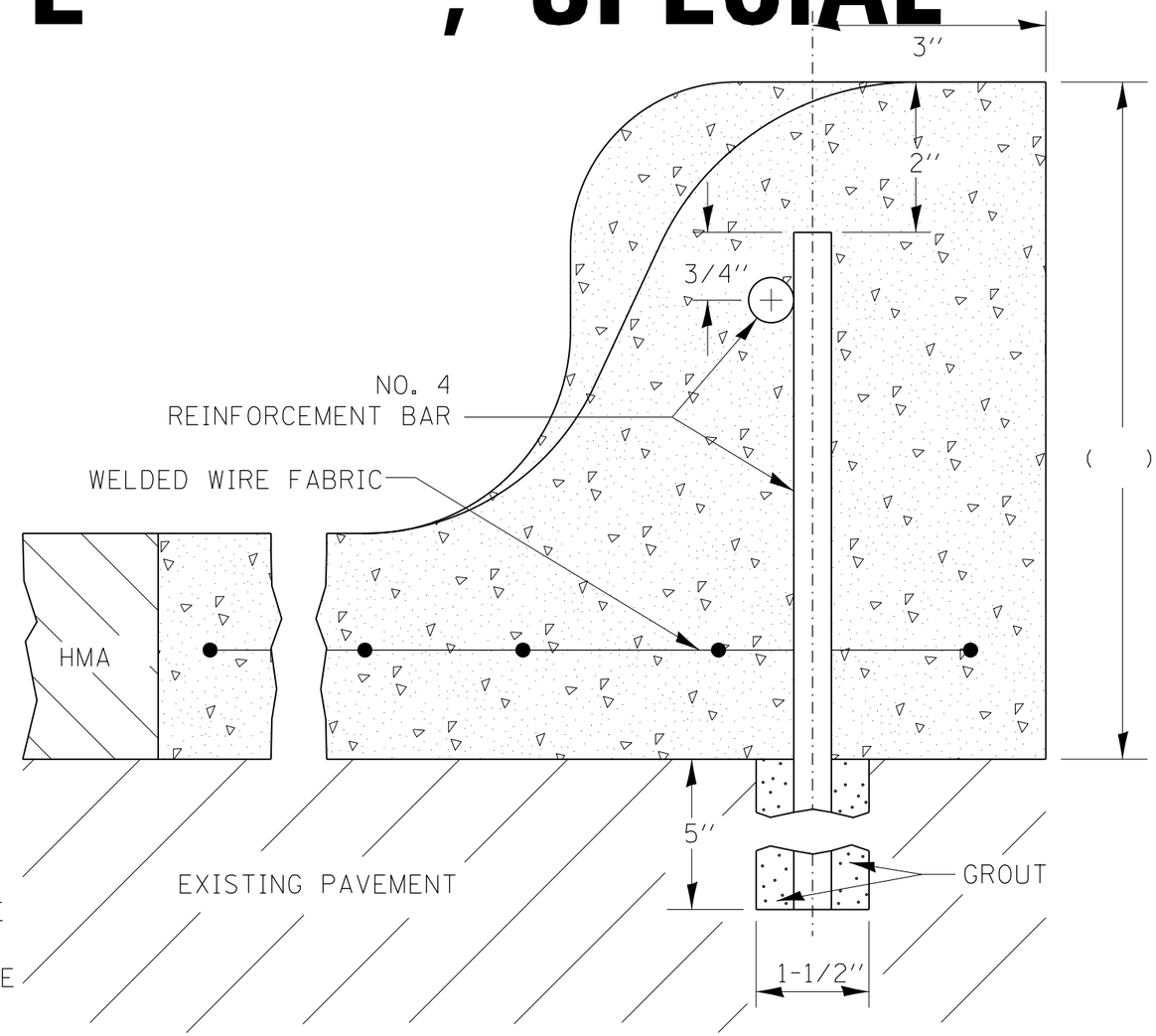

ALL DIMENSIONS ARE IN INCHES UNLESS OTHERWISE NOTED.

REVISED - 9-16-11	REGION 2 / DISTRICT 2 STANDARD			F.A. RTE.	SECTION	COUNTY	TOTAL SHEETS / SHEET NO.
REVISED -							
REVISED -						CONTRACT NO.	
REVISED -	SCALE: 1.0000 '/ in.	SHEET NO. OF SHEETS	STA. TO STA.	FED. ROAD DIST. NO.	ILLINOIS	FED. AID PROJECT	

PLOT DATE = Thu Nov 13 11:31:42 2014

GUTTER OUTLET ADJACENT TO STABILIZED SHOULDER

NOTE:
IF THE AVERAGE GRADE OF PAVEMENT FOR THE DISTANCE A-C EXCEEDS 2%, THIS DISTANCE SHALL BE INCREASED 6' FOR EACH 1% INCREASE IN GRADE.

3 %	30'	2.93 CU. YD.
4 %	36'	3.51 CU. YD.
5 %	42'	4.10 CU. YD.
6 %	48'	4.68 CU. YD.

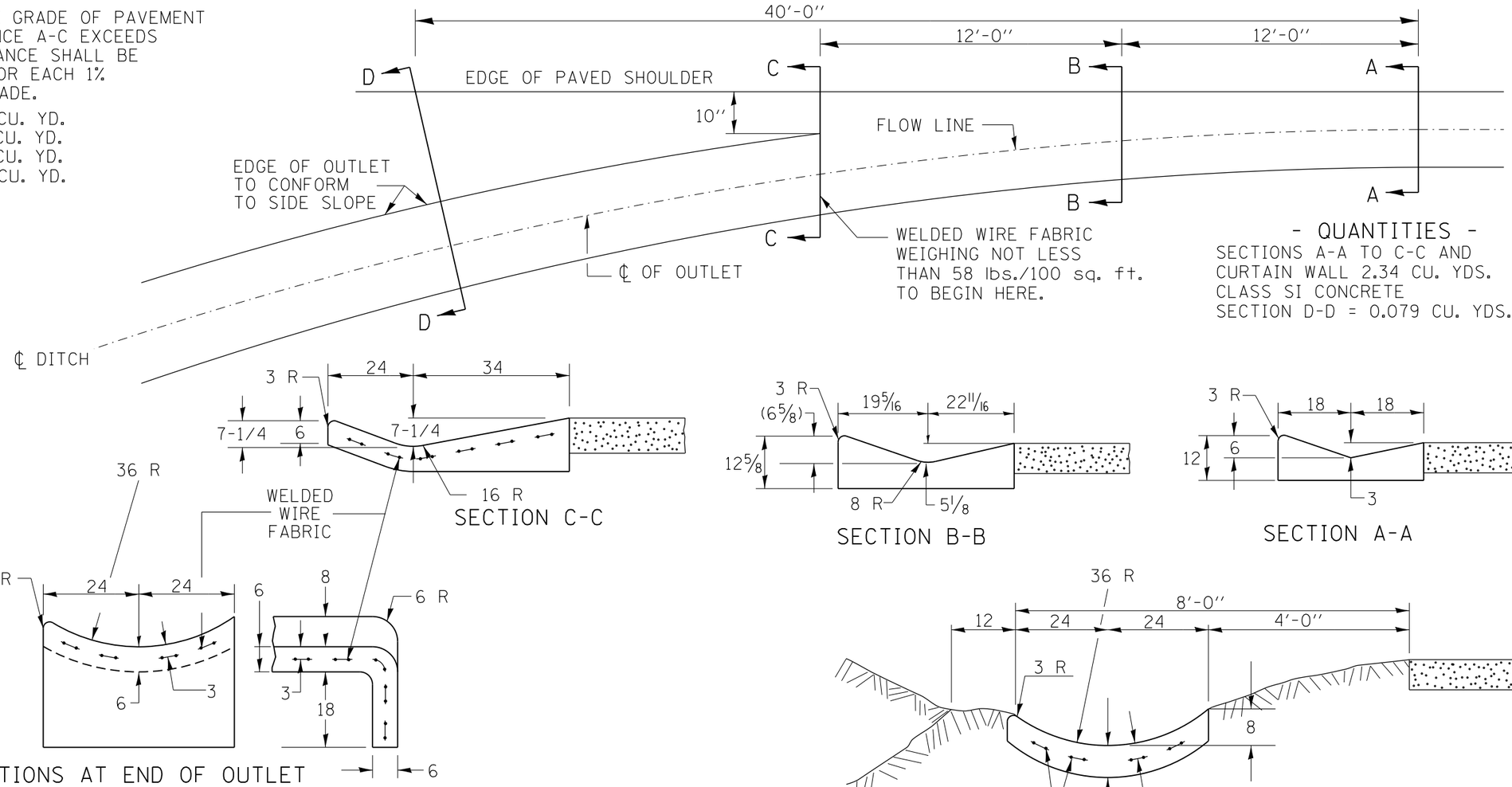

- QUANTITIES -
SECTIONS A-A TO C-C AND CURTAIN WALL 2.34 CU. YDS.
CLASS SI CONCRETE
SECTION D-D = 0.079 CU. YDS./ft.

NOTES:
CLASS SI CONCRETE SHALL BE USED THROUGHOUT.
THE GUTTER OUTLET WILL BE PAID FOR AT THE CONTRACT UNIT PRICE PER CU. YD. FOR CLASS SI CONCRETE (OUTLETS), WHICH PRICE SHALL INCLUDE THE COST OF THE WELDED WIRE FABRIC REINFORCEMENT

ALL DIMENSIONS ARE IN INCHES UNLESS OTHERWISE NOTED.

REVISED - 9-30-11	REGION 2 / DISTRICT 2 STANDARD		F.A. RTE.	SECTION	COUNTY	TOTAL SHEETS	SHEET NO.
REVISED -							
REVISED -					CONTRACT NO.		
REVISED -	SCALE: 1.0000 ' / in.	SHEET NO. OF SHEETS	STA. TO STA.	FED. ROAD DIST. NO.	ILLINOIS	FED. AID PROJECT	

PLOT DATE = Thu Nov 13 11:31:42 2014

CONCRETE GUTTER, TYPE A, WITH FLUME

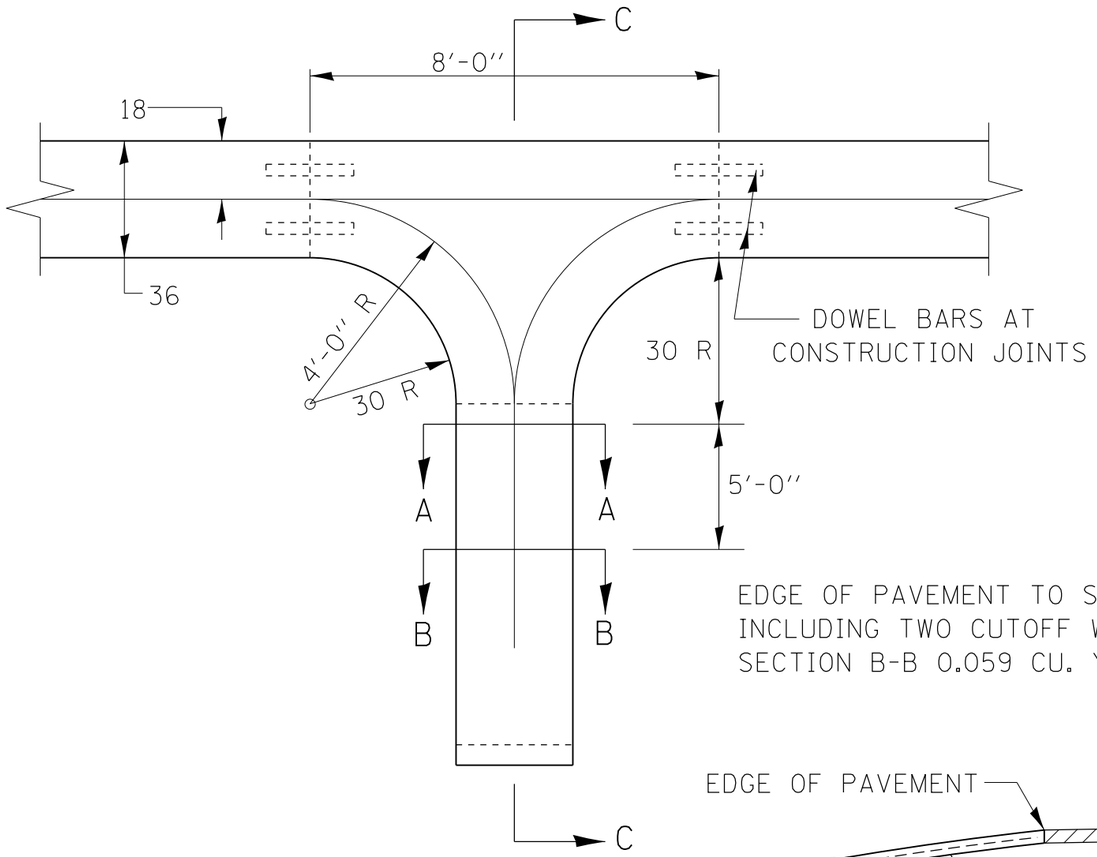

EDGE OF PAVEMENT TO SECTION A-A
INCLUDING TWO CUTOFF WALLS 1.02 CU YDS
SECTION B-B 0.059 CU. YD./FT.

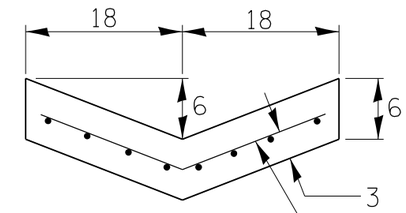

SECTION A-A

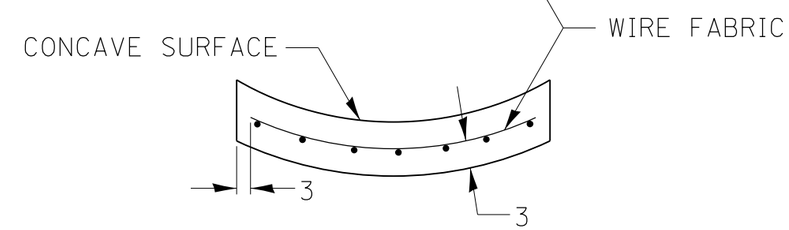

SECTION B-B

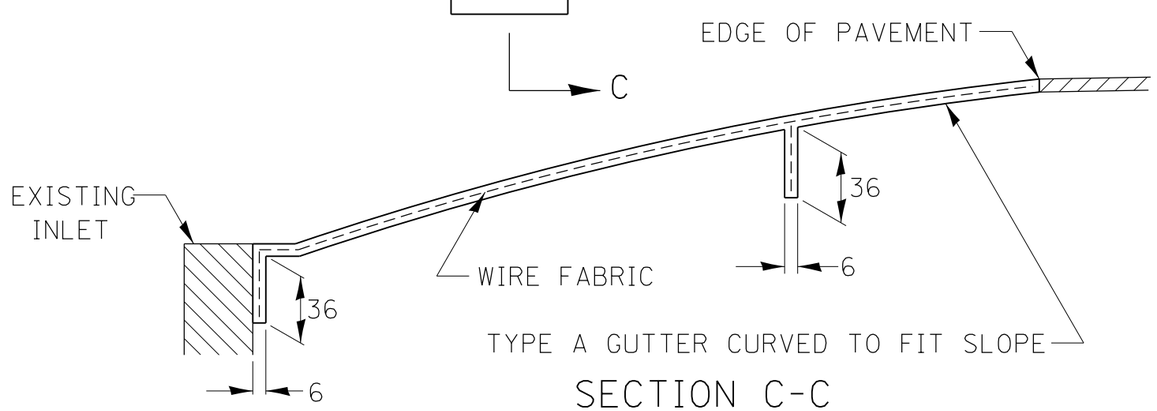

SECTION C-C

NOTES:

CLASS SI CONCRETE SHALL BE USED THROUGHOUT. THE GUTTER SHALL BE TIED TO ITS FLUME AS SHOWN. THE FLUME SHALL BE REINFORCED WITH WIRE MESH HAVING A WEIGHT OF AT LEAST 58 LBS/100 SQ. FT. 6X6. FLUME SHALL ALSO HAVE TWO (2) CUTOFF WALLS AS SHOWN. COST OF FLUME PORTION INCLUDING ALL MATERIALS AND LABOR SHALL BE PAID FOR AT THE CONTRACT UNIT PRICE PER CU. YD. FOR CLASS SI CONCRETE (OUTLET).

ALL DIMENSIONS ARE IN INCHES UNLESS OTHERWISE NOTED.

REVISED - 6-27-14	REGION 2 / DISTRICT 2 STANDARD			F.A. RTE.	SECTION	COUNTY	TOTAL SHEETS / SHEET NO.
REVISED - 9-30-11							
REVISED -						CONTRACT NO.	
REVISED -	SCALE: 1.0000 ' / in.	SHEET NO. OF SHEETS	STA. TO STA.	FED. ROAD DIST. NO.	ILLINOIS	FED. AID PROJECT	

PLOT DATE = Thu Nov 13 11:31:43 2014

CATCH BASIN OR INLETS TO BE ADJUSTED OR RECONSTRUCTED

(DETAILS FOR CURB & GUTTER REPLACEMENT)

CONCRETE CURB AND GUTTER SHALL BE CONSTRUCTED IN ACCORDANCE WITH SECTION 606 OF THE STANDARD SPECIFICATIONS, SUPPLEMENTAL SPECIFICATIONS, STANDARD 606001 AND THIS DRAWING.

CLASS SI CONCRETE SHALL BE USED THROUGHOUT. A HOLE 1-1/2 IN DIAMETER AND 9 DEEP SHALL BE DRILLED IN THE EXISTING CONCRETE CURB AS SHOWN. A 1-1/4 X 18 SMOOTH DOWEL BAR SHALL BE GROUTED IN THE HOLE LONGITUDINALLY.

JOINTS OF A TYPE SIMILAR TO THAT IN THE UNDER-LYING PAVEMENT (EXPANSION OR CONTRACTION) SHALL BE INSTALLED IN THE CONCRETE CURB IN ALIGNMENT WITH THE JOINTS IN THE PAVEMENT.

THE PROPOSED CONFIGURATION OF THE CURB AND GUTTER SHALL MATCH THAT REMOVED.

THE LOCATION OF THE DOWEL BAR SHALL BE DETERMINED BY THE ENGINEER.

ALL EXISTING TIE BARS IN EDGE OF PAVEMENT SLAB THRU REPLACEMENT AREA SHALL BE CUT OFF.

THE WORK SHALL BE DONE IN ACCORDANCE WITH SECTION 602 OF THE STANDARD SPECIFICATIONS AND INCLUDES THE REMOVAL AND REPLACEMENT OF SOD, CONCRETE PAVEMENT AND/OR CURB AND GUTTER ADJACENT TO CATCH BASINS OR INLETS TO BE ADJUSTED OR RECONSTRUCTED AND SHALL BE INCLUDED IN THE PAY ITEM OF CATCH BASINS OR INLETS TO BE ADJUSTED OR RECONSTRUCTED AS SPECIFIED.

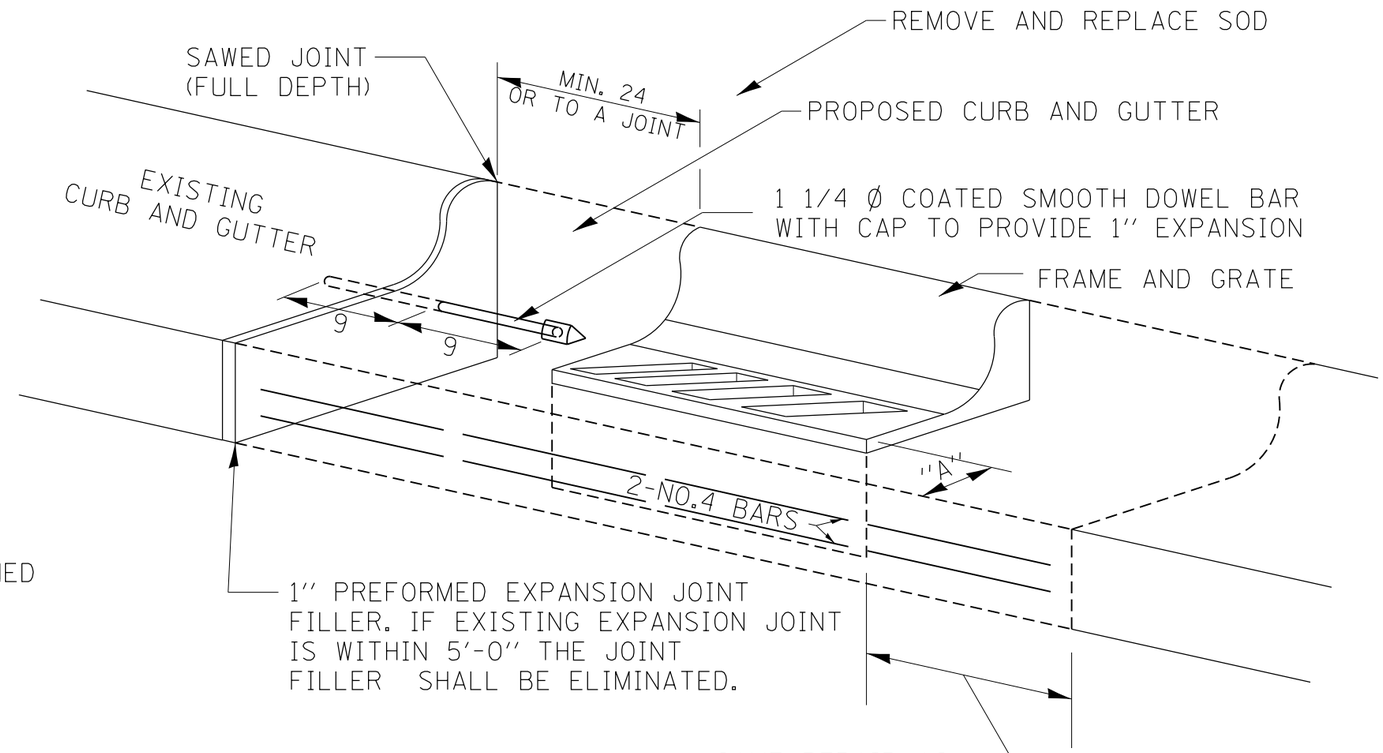

WHEN "A" IS GREATER THAN 2 , 2-NO. 4 BARS SHALL BE PLACED AS SHOWN.

SAME REPAIR AS INDICATED ON OTHER SIDE OF FRAME AND GRATE.

ALL DIMENSIONS ARE IN INCHES UNLESS OTHERWISE NOTED.

REVISED - 9-30-11	REGION 2 / DISTRICT 2 STANDARD			F.A. RTE.	SECTION	COUNTY	TOTAL SHEETS / SHEET NO.
REVISED -							
REVISED -						CONTRACT NO.	
REVISED -	SCALE: 1.0000 ' / in.	SHEET NO. OF SHEETS	STA. TO STA.	FED. ROAD DIST. NO.	ILLINOIS	FED. AID PROJECT	

PLOT DATE = Thu Nov 13 11:31:44 2014

CURB AND GUTTER OUTLET, SPECIAL

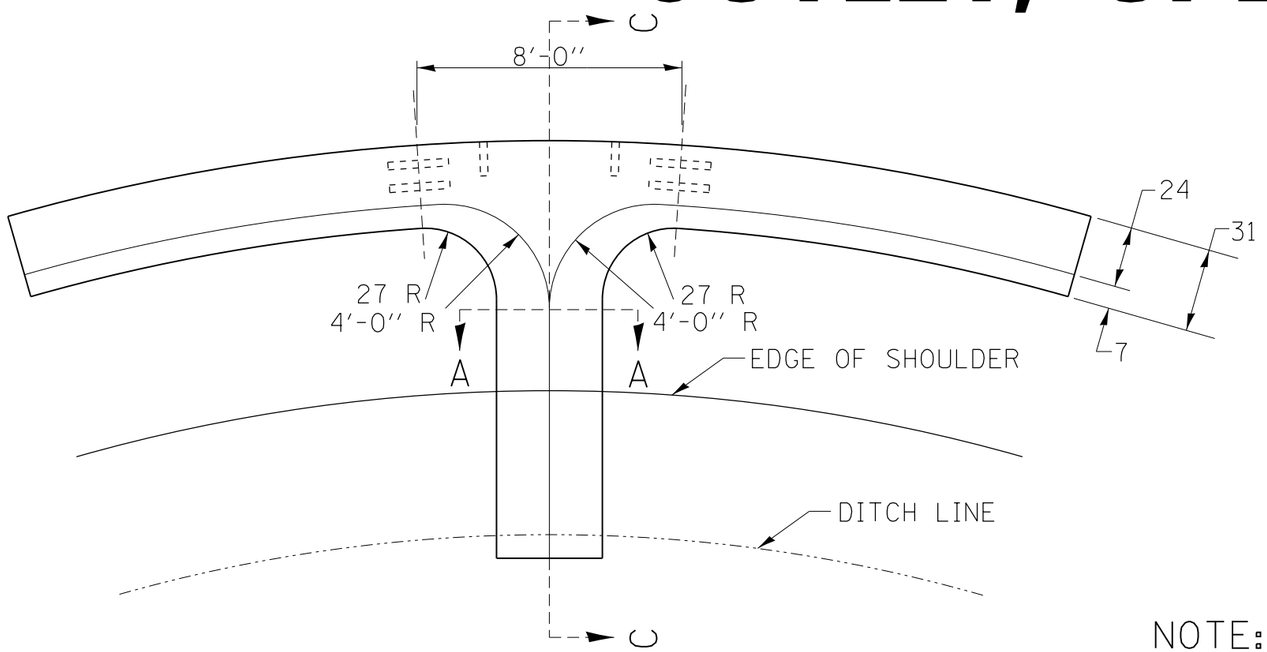

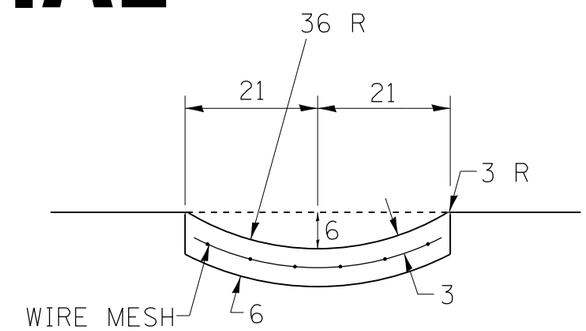

QUANTITY OF CONCRETE
SECTION A-A = 0.07 CU.YD./FT.
8' SECTION OF CURB & GUTTER UP TO
SECTION A-A = 0.75 CU.YD.

SECTION A-A

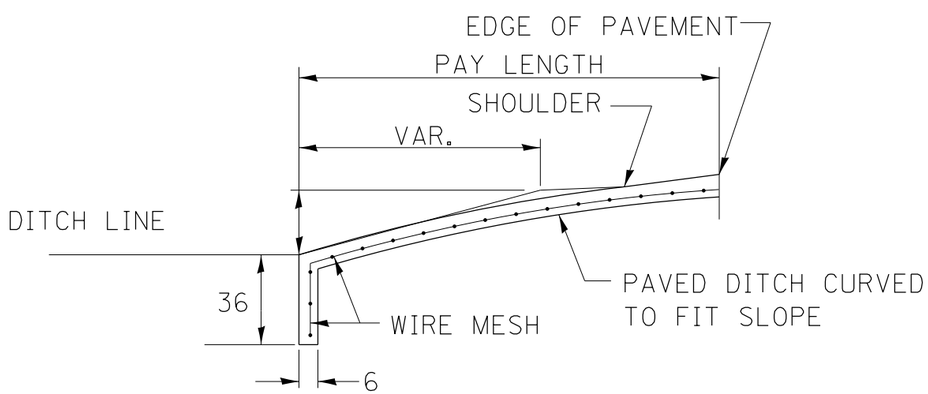

SECTION C-C

NOTE:

CLASS SI CONCRETE SHALL BE USED THROUGHOUT. CURB AND GUTTER OUTLET SHALL BE TIED TO PAVEMENT SLAB WITH 2 TIE BARS, 30 LONG - 30 CENTERS. OUTLET SHALL BE TIED TO CURB AND GUTTER AT CONTRACTION JOINTS AS SHOWN. GUTTER OUTLET AND PAVED DITCH SHALL BE REINFORCED WITH WIRE MESH HAVING A WEIGHT OF AT LEAST 58 LBS/SQ. FT. COST TO BE INCLUDED IN THE UNIT PRICE PER CUBIC YARD FOR CLASS SI CONCRETE (OUTLET).

ALL DIMENSIONS ARE IN INCHES UNLESS OTHERWISE NOTED.

PLOT DATE = Thu Nov 13 11:31:44 2014

REVISED - 9-30-11	REGION 2 / DISTRICT 2 STANDARD				F.A. RTE.	SECTION	COUNTY	TOTAL SHEETS	SHEET NO.
REVISED -									
REVISED -							CONTRACT NO.		
REVISED -	SCALE: 1.0000 ' / in.	SHEET NO. OF SHEETS	STA.	TO STA.	FED. ROAD DIST. NO.	ILLINOIS	FED. AID PROJECT		

RIPRAP AT END SECTIONS

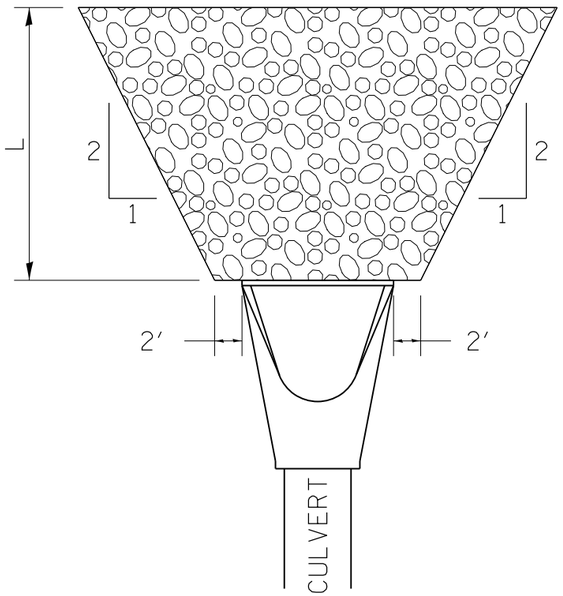

FLARED END SECTION

THE LENGTH OF RIPRAP (L) IS TO BE THREE (3) TIMES THE 10 YEAR CULVERT OUTLET VELOCITY, FROM THE WATERWAY INFORMATION TABLE (WIT).

IF THE CULVERT OUTLETS INTO A DEFINED CHANNEL, RIPRAP BANK TO BANK FOR LENGTH (L).

STANDARD END SECTION:
542001 (PIPE), 542011 (ELLIPTICAL)
DISTRICT STANDARD 10.1 (BOX).

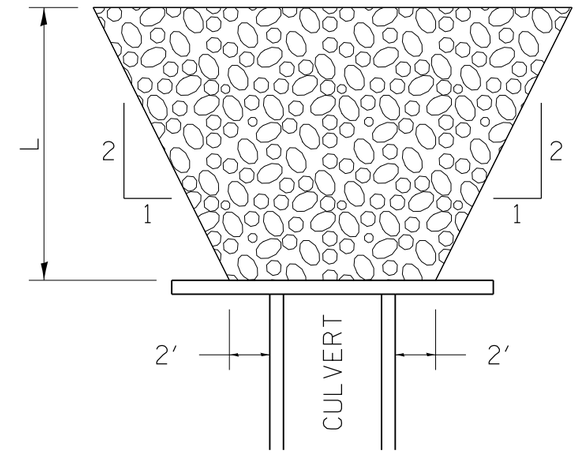

CULVERT WITH HEADWALL

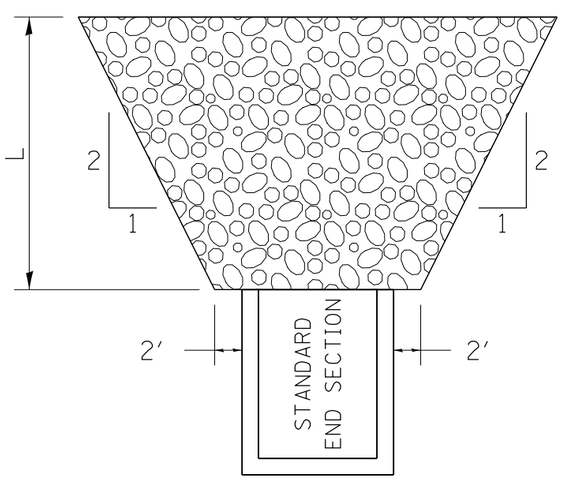

STANDARD END SECTION

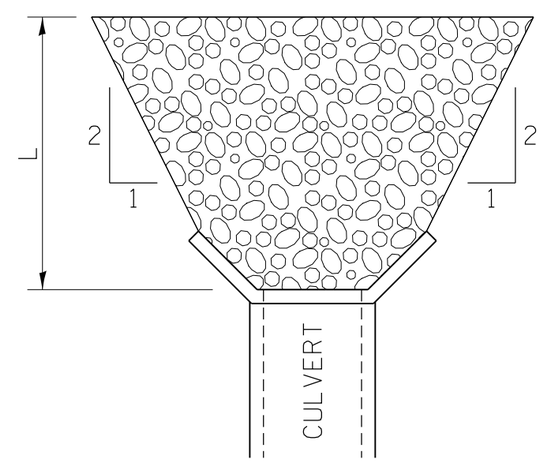

CULVERT WITH WING WALLS

REVISED - 11-12-14	**REGION 2 / DISTRICT 2 STANDARD**				F.A. RTE.	SECTION	COUNTY	TOTAL SHEETS	SHEET NO.
REVISED - 2-10-14									
REVISED -							CONTRACT NO.		
REVISED -	SCALE: 1.0000 ' / in.	SHEET NO.	OF	SHEETS	STA.	TO STA.	FED. ROAD DIST. NO.	ILLINOIS	FED. AID PROJECT

PLOT DATE = Thu Nov 13 11:31:45 2014

CONCRETE REVETMENT MAT AT END SECTIONS

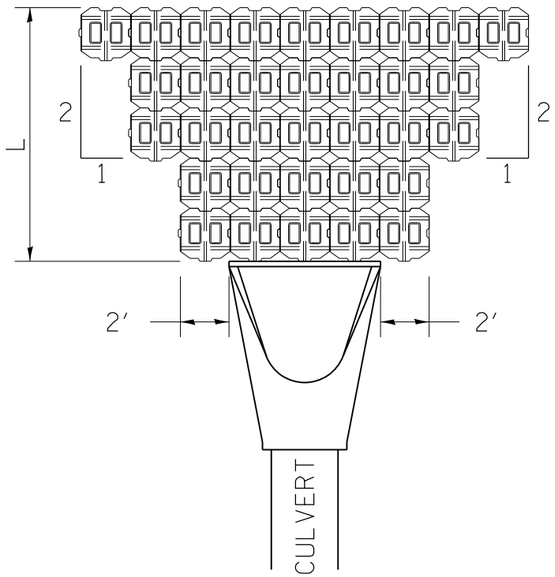

FLARED END SECTION

THE LENGTH OF BLOCK MAT (L) IS TO BE THREE (3) TIMES THE 10 YEAR CULVERT OUTLET VELOCITY, FROM THE WATERWAY INFORMATION TABLE (WIT).

IF THE CULVERT OUTLETS INTO A DEFINED CHANNEL, INSTALL BLOCK BANK TO BANK FOR LENGTH (L).

STANDARD END SECTION:
542001 (PIPE), 542011 (ELLIPTICAL)
DISTRICT STANDARD 10.1 (BOX).

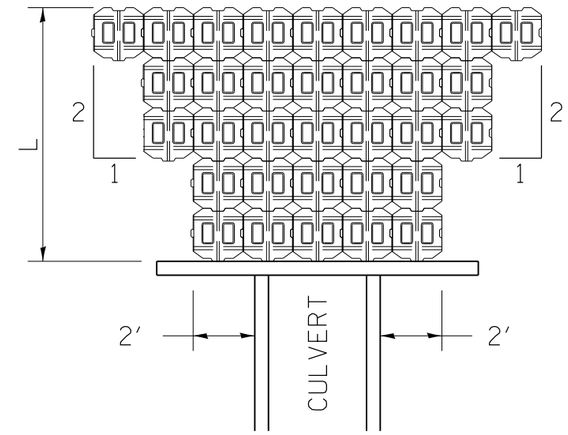

CULVERT WITH HEADWALL

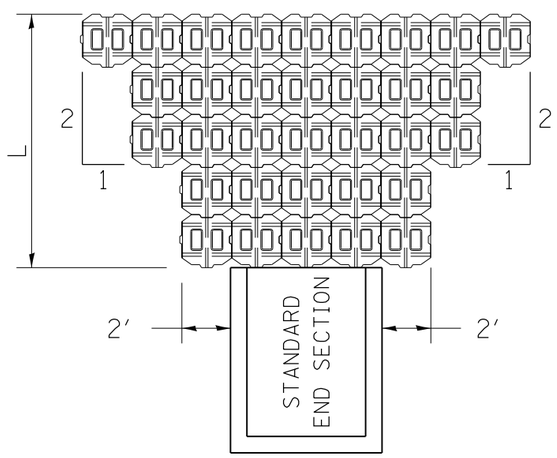

STANDARD END SECTION

Station	Offset	Velocity (ft/sec)	Slope (ft/ft)	Depth of Flow (ft)	Shear Stress (lb/ft²)

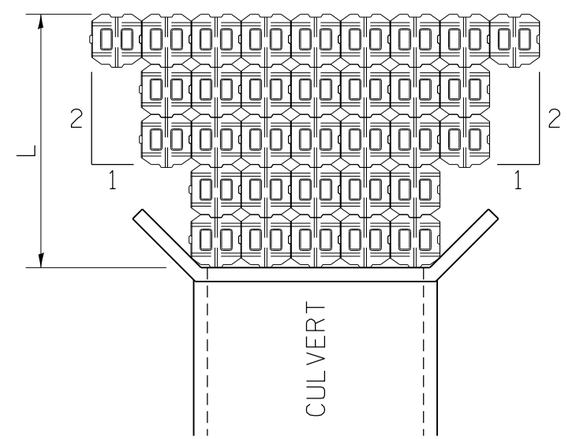

CULVERT WITH WING WALLS

REVISED - 11-12-14	REGION 2 / DISTRICT 2 STANDARD			F.A. RTE.	SECTION	COUNTY	TOTAL SHEETS	SHEET NO.
REVISED -								
REVISED -						CONTRACT NO.		
REVISED -	SCALE: 1.0000 ' / in.	SHEET NO. OF SHEETS	STA. TO STA.	FED. ROAD DIST. NO.	ILLINOIS	FED. AID PROJECT		

PLOT DATE = Thu Nov 13 11:31:46 2014

GRADING AROUND WINGWALLS

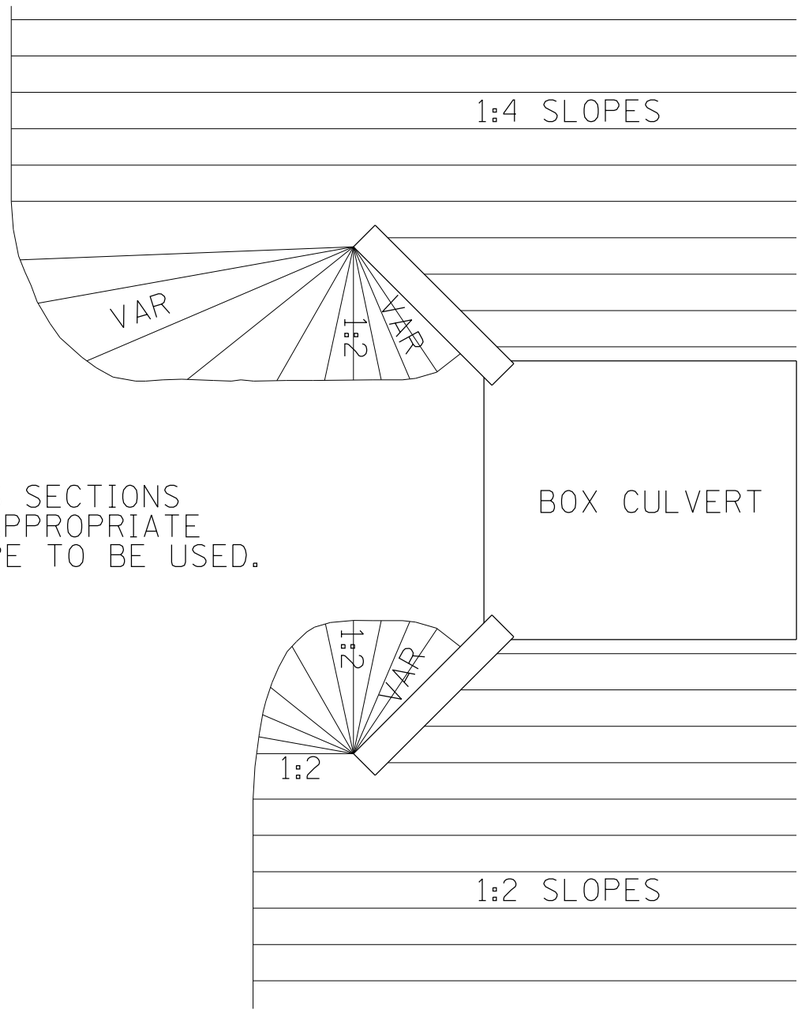

NOTES
SEE CROSS SECTIONS FOR THE APPROPRIATE FRONTSLOPE TO BE USED.

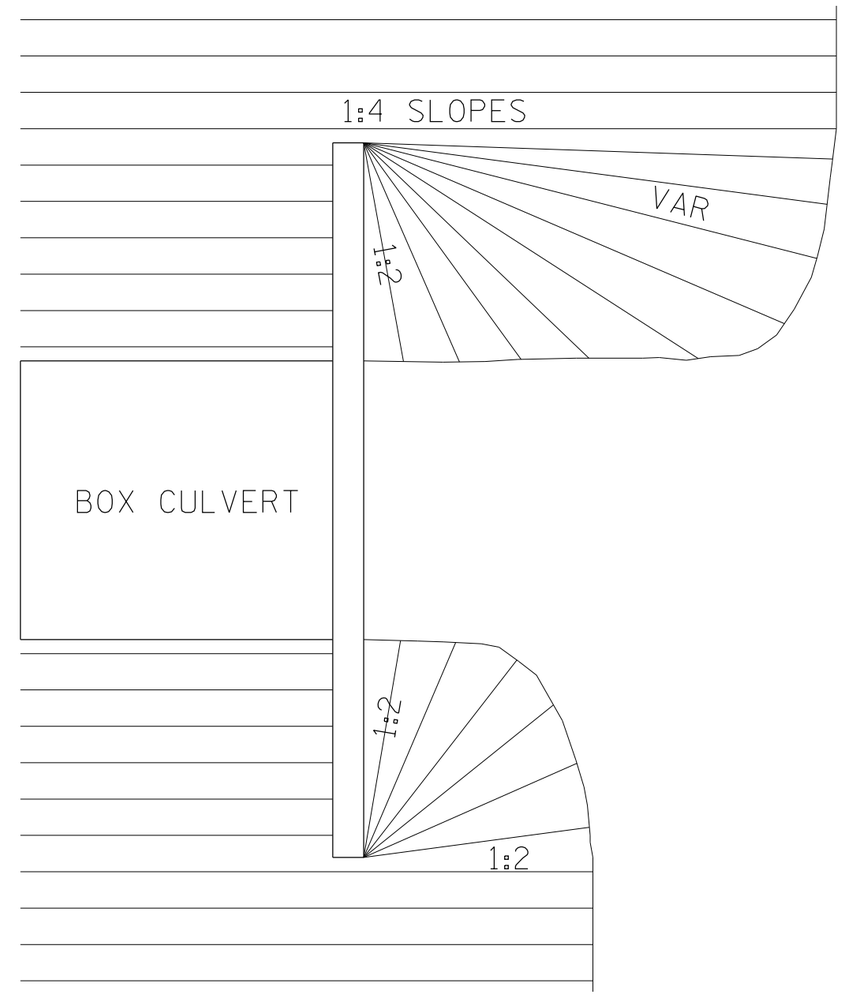

PLOT DATE = Thu Nov 13 11:31:47 2014

REVISED - 5-27-09	REGION 2 / DISTRICT 2 STANDARD				F.A. RTE.	SECTION	COUNTY	TOTAL SHEETS	SHEET NO.
REVISED -									
REVISED -							CONTRACT NO.		
REVISED -	SCALE: 1.0000 ' / in.	SHEET NO. OF SHEETS	STA.	TO STA.	FED. ROAD DIST. NO.	ILLINOIS	FED. AID PROJECT		

AGGREGATE DITCH FOR FLEXIBLE DITCH LINING

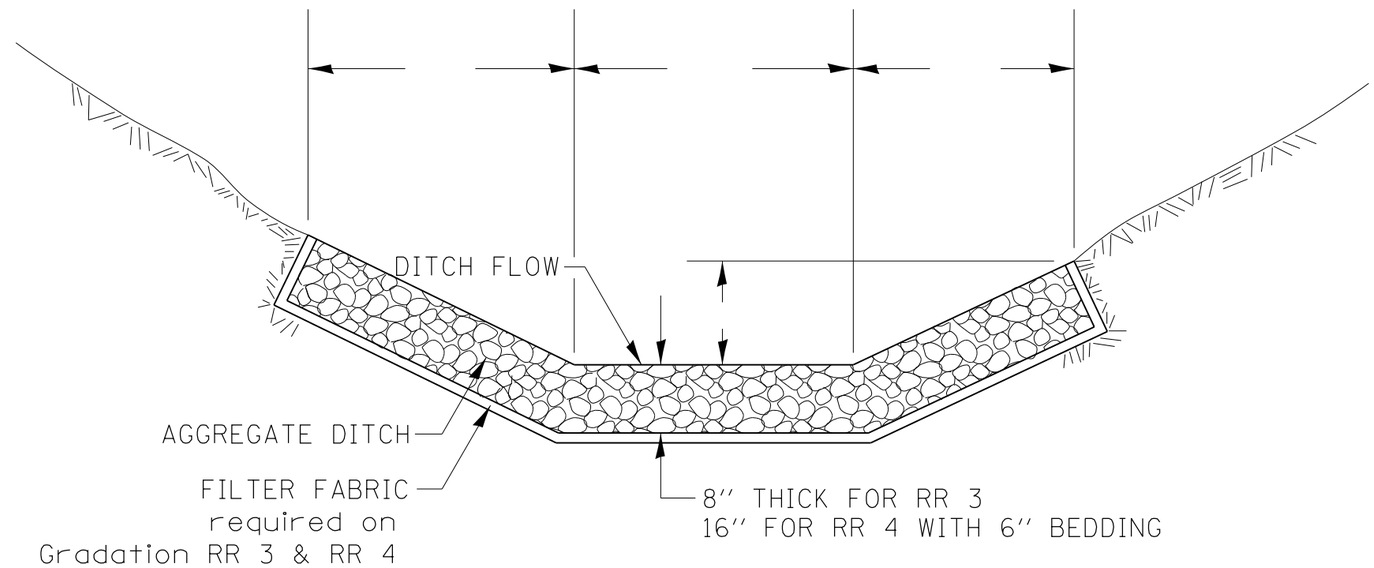

THIS WORK SHALL BE DONE IN ACCORDANCE WITH SECTION 281. AGGREGATE DITCH WILL BE MEASURED FOR PAYMENT IN PLACE AND THE AREA COMPUTED IN SQUARE YARDS OF ACTUAL SURFACE AREA.
AGGREGATE DITCH WILL BE PAID FOR AT THE CONTRACT UNIT PRICE PER SQUARE YARD FOR STONE RIPRAP CLASS A3 OR STONE RIPRAP CLASS A4 THE FILTER FABRIC SHALL BE ACCORDING TO SECTION 282. FILTER FABRIC WILL BE PAID FOR AT THE CONTRACT UNIT PRICE PER SQUARE YARD FOR FILTER FABRIC.

ALL DIMENSIONS ARE IN INCHES UNLESS OTHERWISE NOTED.

PLOT DATE = Thu Nov 13 11:31:47 2014

REVISED - 7-05-12	**REGION 2 / DISTRICT 2 STANDARD**				F.A. RTE.	SECTION	COUNTY	TOTAL SHEETS	SHEET NO.
REVISED -									
REVISED -							CONTRACT NO.		
REVISED -	SCALE: 1.0000 '/ in.	SHEET NO.	OF	SHEETS	STA.	TO STA.	FED. ROAD DIST. NO.	ILLINOIS	FED. AID PROJECT

DETAIL OF HOT-MIX ASPHALT SHOULDER AT GUARDRAIL

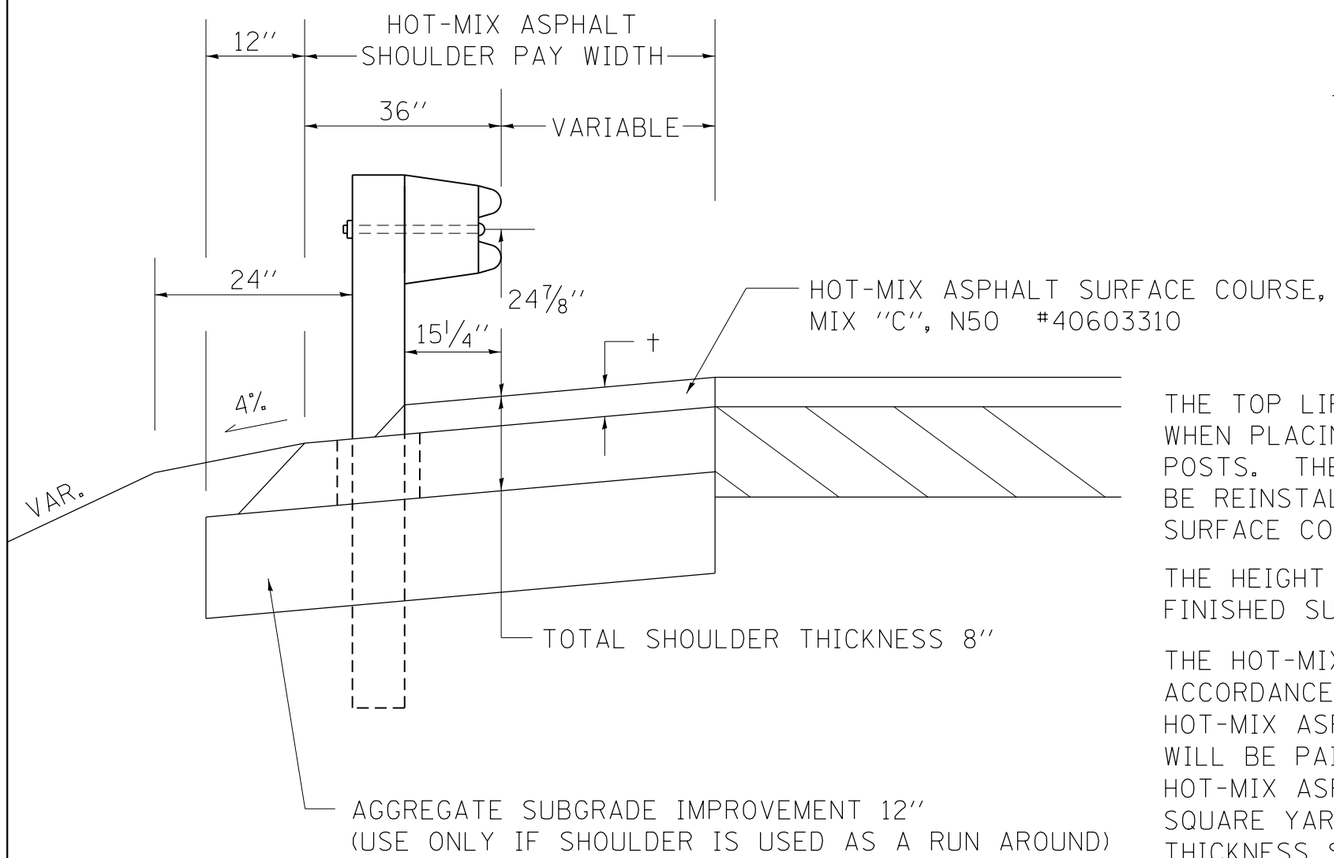

† = SEE TYPICAL SECTIONS FOR THICKNESS

GENERAL NOTES

THE TOP LIFT SHALL NOT BE PLACED BEHIND THE GUARDRAIL POSTS. WHEN PLACING THE TOP LIFT THE RAIL MUST BE REMOVED FROM THE POSTS. THE POST SHALL NOT BE REMOVED. THE RAIL ELEMENT SHALL BE REINSTALLED WITHIN 72 HOURS OF THE COMPLETION OF THE SURFACE COURSE.

THE HEIGHT OF THE GUARDRAIL SHALL BE SET 24 7/8'' FROM THE FINISHED SURFACE.

THE HOT-MIX ASPHALT SHOULDER SHALL BE CONSTRUCTED IN ACCORDANCE WITH SECTION 482 EXCEPT THE TOP LIFT SHALL BE HOT-MIX ASPHALT SURFACE COURSE, MIXTURE C, N50. THE WORK WILL BE PAID FOR AT THE CONTRACT UNIT PRICE PER TON FOR HOT-MIX ASPHALT SURFACE COURSE, MIXTURE ''C'', N50 AND SQUARE YARD FOR HOT-MIX ASPHALT SHOULDERS OF THE THICKNESS SPECIFIED. THE REMOVAL & REINSTALLATION OF THE GUARDRAIL WILL BE INCLUDED IN THE COST OF THE HOT-MIX ASPHALT SURFACE COURSE, MIXTURE C, N50.

PLOT DATE = Thu Nov 13 11:31:48 2014

REVISED - 6-27-14	REGION 2 / DISTRICT 2 STANDARD			F.A. RTE.	SECTION	COUNTY	TOTAL SHEETS	SHEET NO.
REVISED - 8-27-13								
REVISED - 3-13-13						CONTRACT NO.		
REVISED -	SCALE: 1.0000 '/ in.	SHEET NO. OF SHEETS	STA. TO STA.	FED. ROAD DIST. NO.	ILLINOIS	FED. AID PROJECT		

HOT–MIX ASPHALT SHOULDER

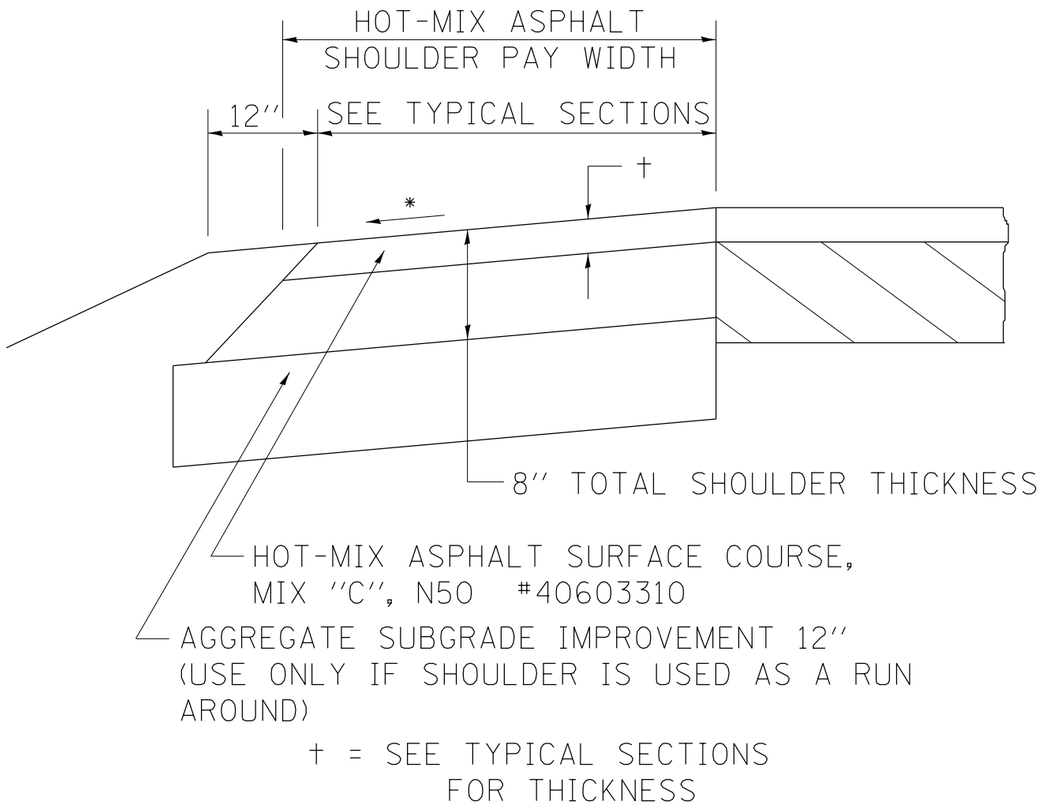

GENERAL NOTES

THE HOT-MIX ASPHALT SHOULDER SHALL BE CONSTRUCTED IN ACCORDANCE WITH SECTION 482 EXCEPT THE TOP LIFT SHALL BE HOT-MIX ASPHALT SURFACE COURSE, MIX ''C'', N50 #40603310. THE WORK WILL BE PAID FOR AT THE CONTRACT UNIT PRICE PER TON FOR HOT-MIX ASPHALT SURFACE COURSE, MIX ''C'', N50 #40603310 AND SQUARE YARD FOR HOT-MIX ASPHALT SHOULDERS OF THE THICKNESS SPECIFIED.

USE HOT-MIX ASPHALT SURFACE COURSE, MIX ''C'', N50 #40603310. WHEN RESURFACING EXISTING HOT-MIX ASPHALT SHOULDERS. THE THICKNESS IS SHOWN ON THE TYPICAL SECTIONS. THIS WORK WILL BE PAID FOR AT THE CONTRACT UNIT PRICE PER TON FOR HOT-MIX ASPHALT SURFACE COURSE, MIX ''C'', N50 #40603310.

REMOVAL OF MATERIAL FOR PLACEMENT OF THE HOT-MIX ASPHALT SHOULDER TO BE PAID FOR IN UNITS FOR EXCAVATING AND GRADING EXISTING SHOULDERS OR IN CUBIC YARDS FOR EARTH EXCAVATION OR EARTH EXCAVATION WIDENING.

* 4% WHEN MAINLINE IS ON TANGENT. FOR CROSS SLOPE ON SUPERELEVATION SECTION, SEE HIGHWAY STANDARD 482001 OR 482006.

PLOT DATE = Thu Nov 13 11:31:48 2014

REVISED - 3-13-13	REGION 2 / DISTRICT 2 STANDARD				F.A. RTE.	SECTION	COUNTY	TOTAL SHEETS	SHEET NO.
REVISED -									
REVISED -							CONTRACT NO.		
REVISED -	SCALE: 1.0000 '/ in.	SHEET NO. OF SHEETS	STA.	TO STA.	FED. ROAD DIST. NO.	ILLINOIS	FED. AID PROJECT		

PAVEMENT BREAKING DETAIL

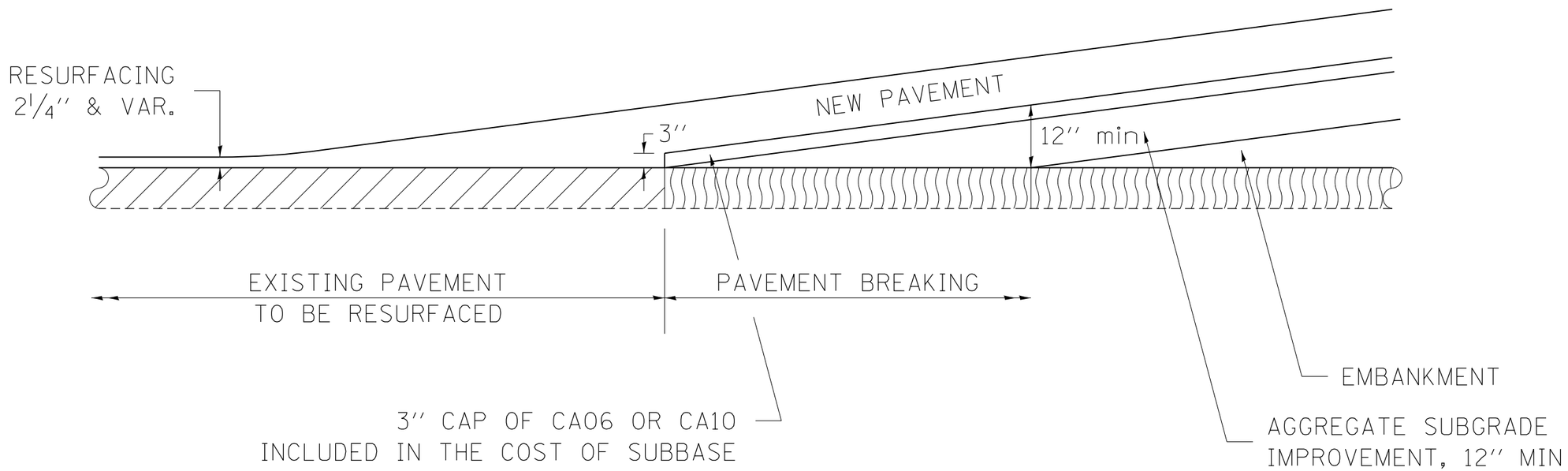

PLOT DATE = Thu Nov 13 11:31:49 2014

REVISED - 3-19-13	**REGION 2 / DISTRICT 2 STANDARD**				F.A. RTE.	SECTION	COUNTY	TOTAL SHEETS	SHEET NO.
REVISED -									
REVISED -							CONTRACT NO.		
REVISED -	SCALE: 1.0000 '/ in.	SHEET NO.	OF	SHEETS	STA.	TO STA.	FED. ROAD DIST. NO.	ILLINOIS	FED. AID PROJECT

PAVEMENT BREAKING DETAIL **24.4**

CONCRETE HEADWALLS FOR PIPE DRAINS

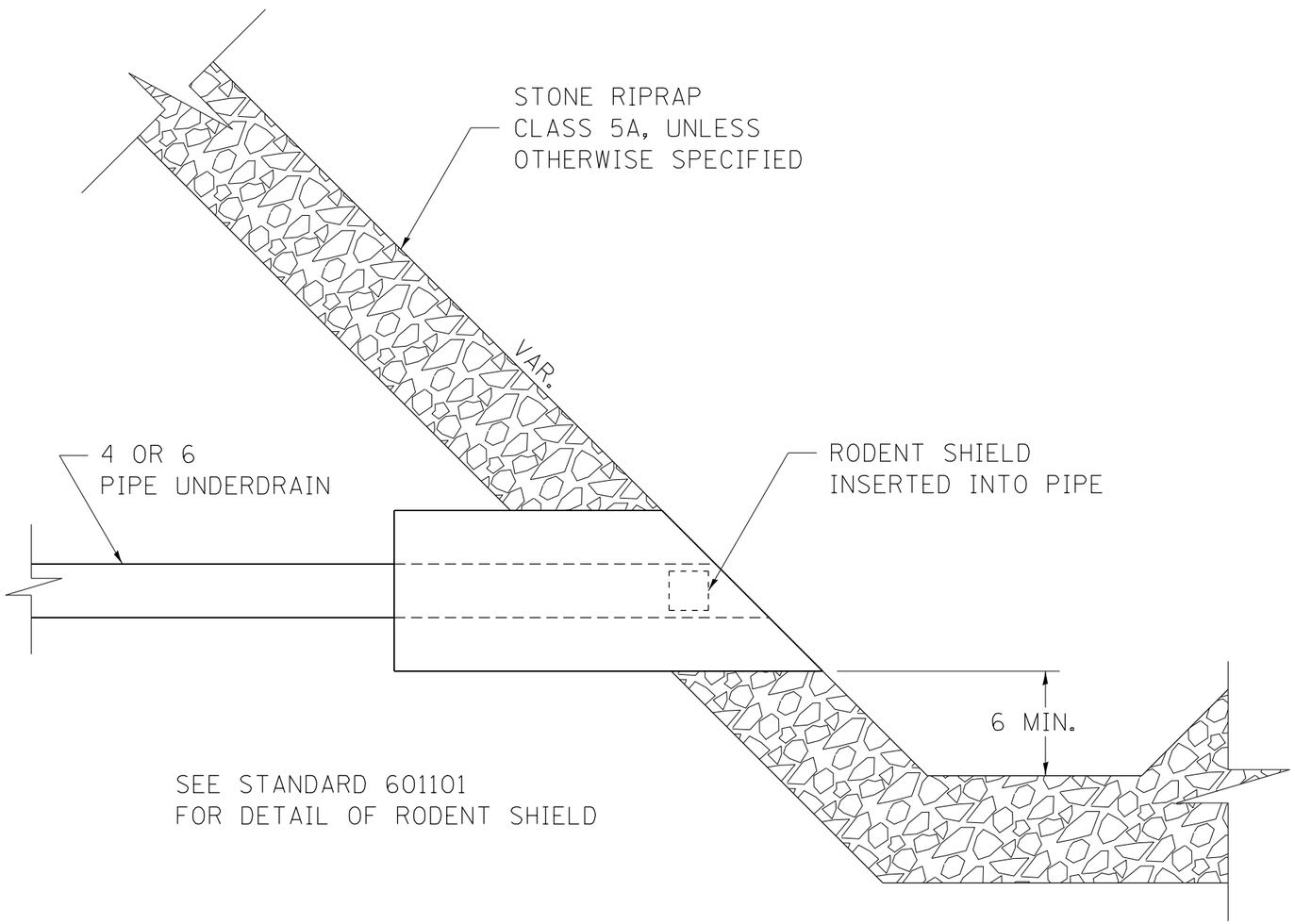

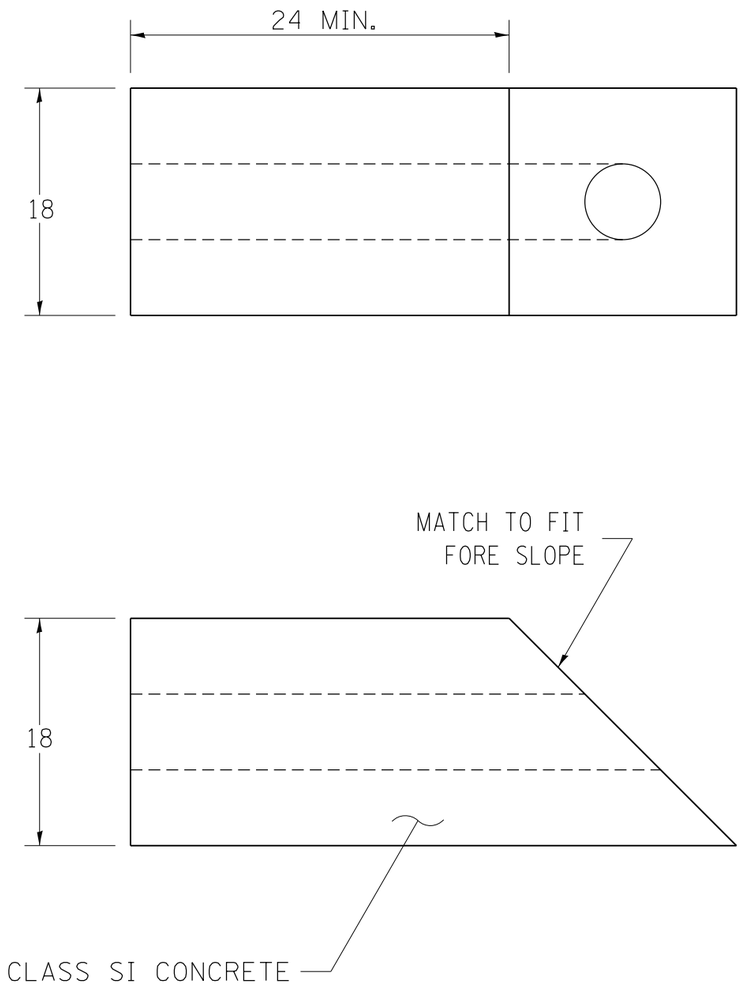

ALL DIMENSIONS ARE IN INCHES UNLESS OTHERWISE NOTED.

REVISED - 11-12-14	REGION 2 / DISTRICT 2 STANDARD			F.A. RTE.	SECTION	COUNTY	TOTAL SHEETS / SHEET NO.
REVISED - 10-03-11							
REVISED -						CONTRACT NO.	
REVISED -	SCALE: 1.0000 ' / in.	SHEET NO. OF SHEETS	STA. TO STA.	FED. ROAD DIST. NO.	ILLINOIS	FED. AID PROJECT	

PLOT DATE = Thu Nov 13 11:31:50 2014

CAST–IN–PLACE REINFORCED CONCRETE END SECTIONS

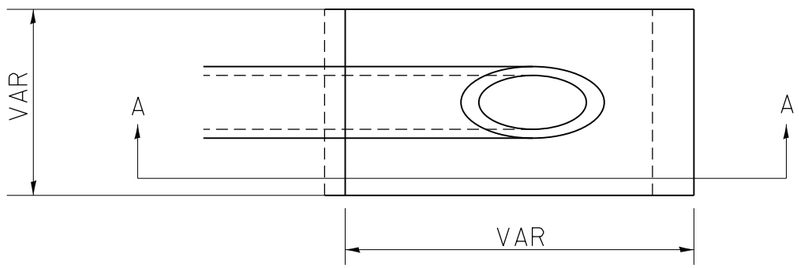

NOTES

1. ANY STORM SEWER OR FIELD TILE OUTLET INTO A DITCH SHALL HAVE A HEADWALL BUILT IN ACCORDANCE WITH THIS DETAIL.

2. COST OF FURNISHING AND INSTALLING WIRE MESH SHALL BE INCLUDED IN THE CONTRACT UNIT PRICE EACH OF THE SIZE SPECIFIED. WIRE MESH TO WEIGH NOT LESS THAN 58# PER 100 SQ. FT.

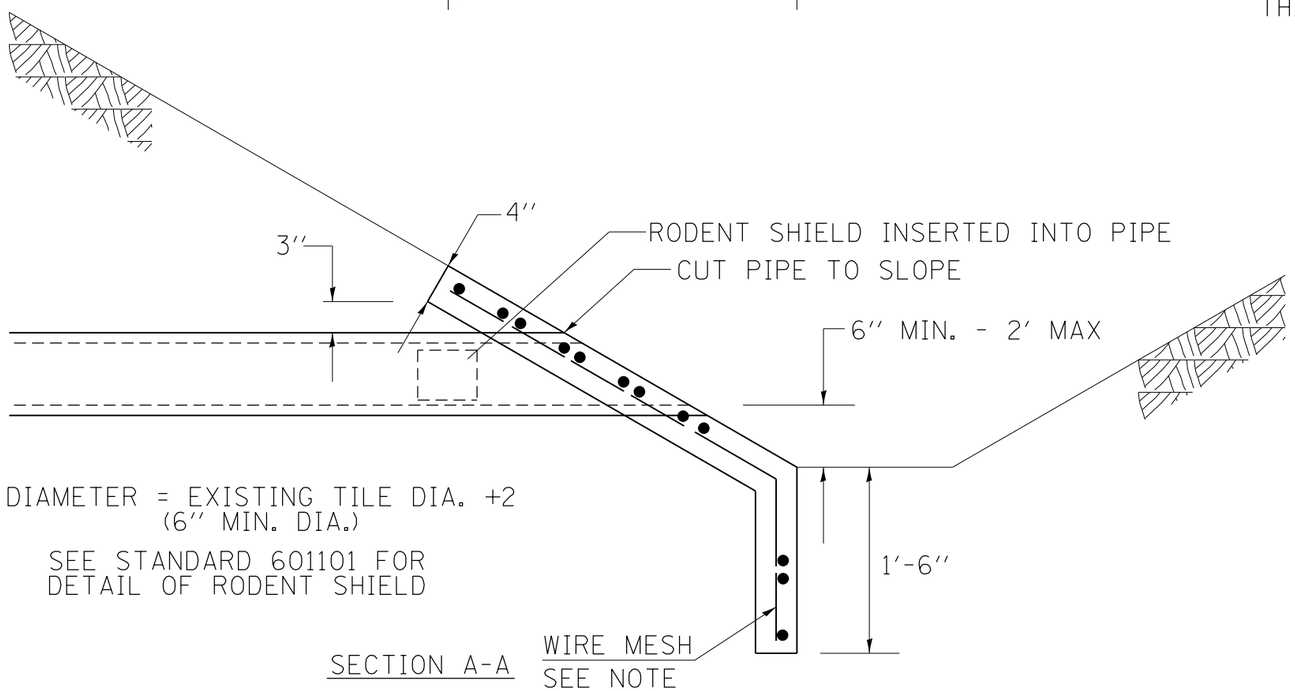

SECTION A-A

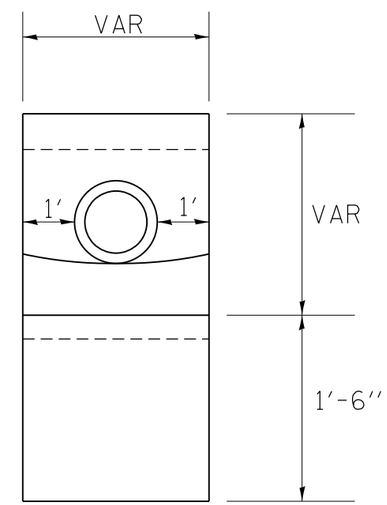

REVISED - 10-09-12	REGION 2 / DISTRICT 2 STANDARD			F.A. RTE.	SECTION	COUNTY	TOTAL SHEETS / SHEET NO.
REVISED -							
REVISED -						CONTRACT NO.	
REVISED -	SCALE: 1.0000 '/ in.	SHEET NO. OF SHEETS	STA. TO STA.	FED. ROAD DIST. NO.	ILLINOIS	FED. AID PROJECT	

PLOT DATE = Thu Nov 13 11:31:50 2014

SILICONE JOINT SEAL (CONCRETE DETAILS)

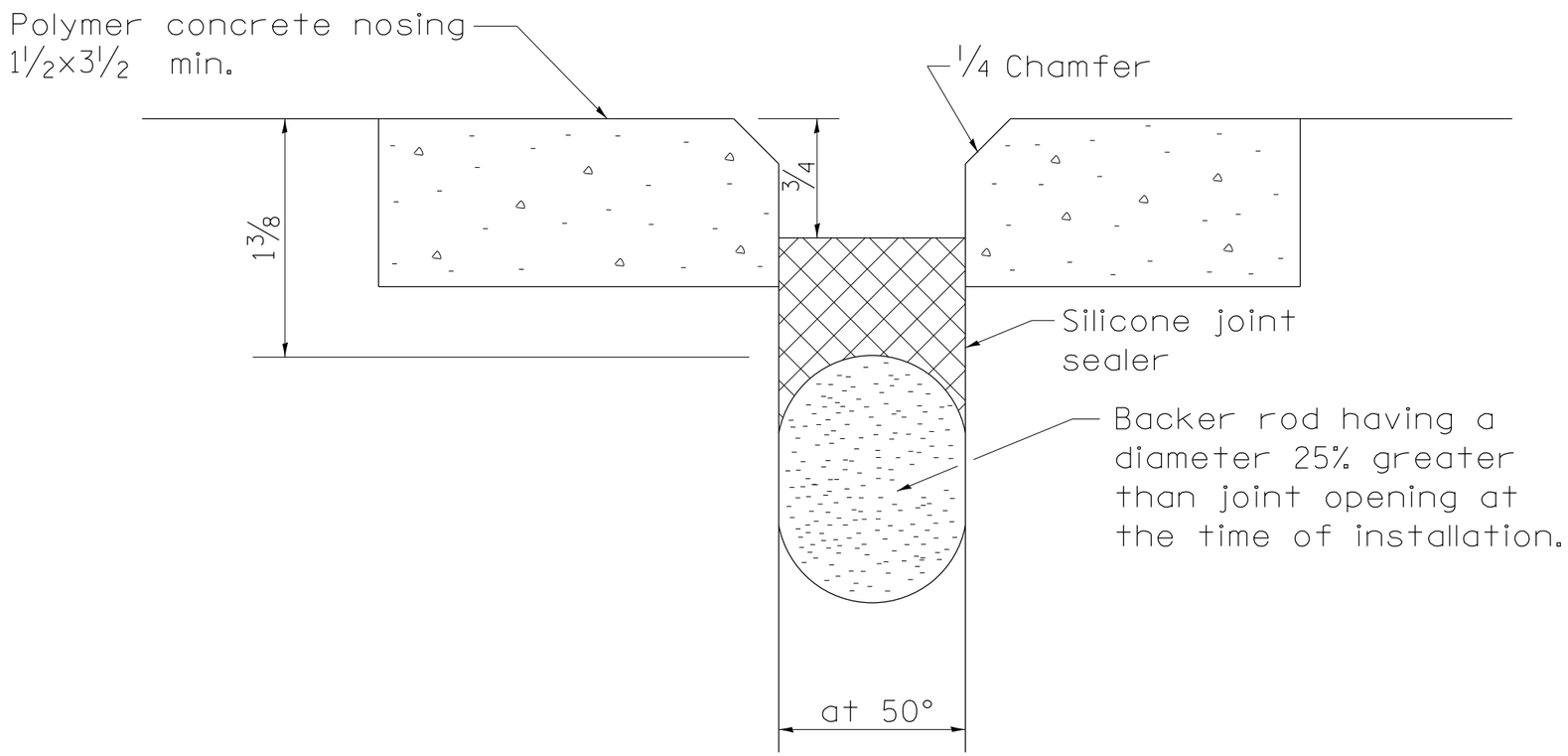

ALL DIMENSIONS ARE IN INCHES UNLESS OTHERWISE NOTED.

REVISED - 10-03-11	REGION 2 / DISTRICT 2 STANDARD				F.A. RTE.	SECTION	COUNTY	TOTAL SHEETS	SHEET NO.
REVISED -									
REVISED -							CONTRACT NO.		
REVISED -	SCALE: 1.0000 ' / in.	SHEET NO. OF SHEETS	STA.	TO STA.	FED. ROAD DIST. NO.	ILLINOIS	FED. AID PROJECT		

PLOT DATE = Thu Nov 13 11:31:51 2014

STONE WELLS, SPECIAL

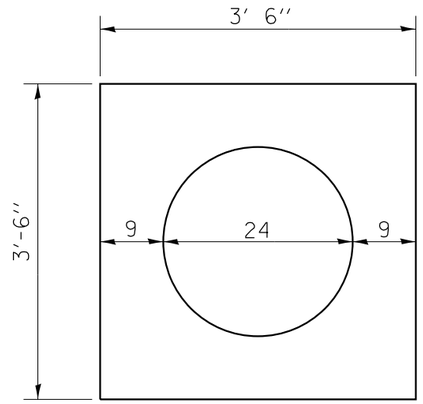

PLAN
SINGLE STONE WELL

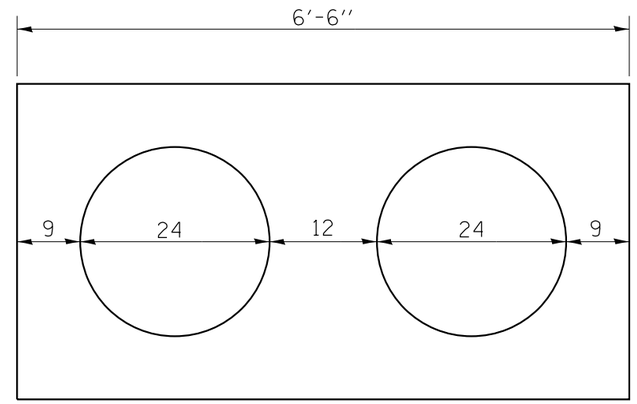

PLAN
DOUBLE STONE WELL

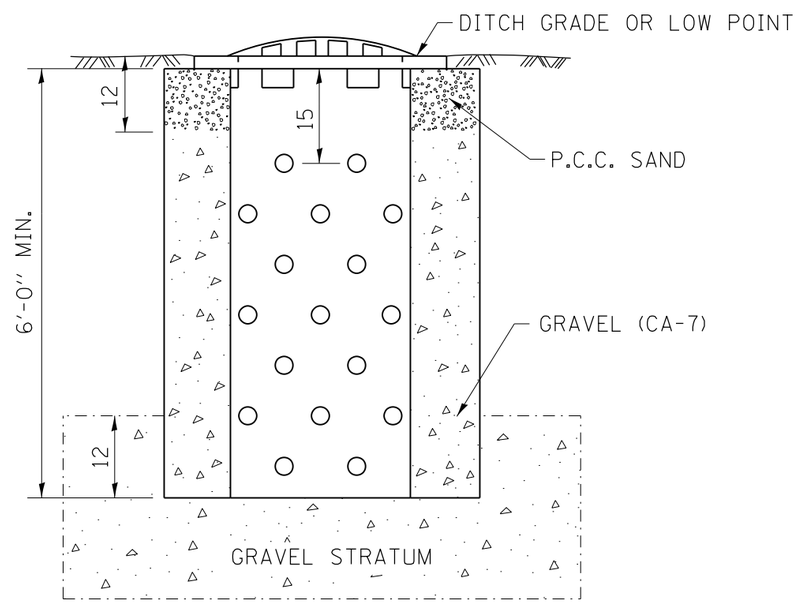

NOTE:

THE INSIDE LINER OF THE STONE WELL SHALL BE A 24 CORRUGATED METAL PIPE OF THE SAME QUALITY AS SPECIFIED FOR PIPE CULVERTS, TYPE I. THE PERFORATIONS SHALL BEGIN 15 FROM THE TOP OF THE STONE WELL AT THE RATE OF 4 HOLES PER SQUARE FOOT. THE SIZE OF THE HOLES SHALL NOT BE LESS THAN 5/16 OR MORE THAN 5/8 DIAMETER. DOUBLE STONE WELL TO BE PAID FOR AS TWO (2) STONE WELLS. STANDARD GRATE TYPE 8 (STD. 604036) WILL BE USED. THE CONTRACT UNIT PRICE FOR STONE WELLS, SPECIAL SHALL INCLUDE ALL MATERIALS AND LABOR FOR THE COMPLETE IN PLACE STONE WELL.

ALL DIMENSIONS ARE IN INCHES UNLESS OTHERWISE NOTED.

PLOT DATE = Thu Nov 13 11:31:52 2014

REVISED - 6-27-14	REGION 2 / DISTRICT 2 STANDARD				F.A. RTE.	SECTION	COUNTY	TOTAL SHEETS	SHEET NO.
REVISED - 10-03-11									
REVISED -							CONTRACT NO.		
REVISED -	SCALE: 1.0000 ' / in.	SHEET NO. OF SHEETS	STA.	TO STA.	FED. ROAD DIST. NO.	ILLINOIS	FED. AID PROJECT		

PARKING BLOCKS

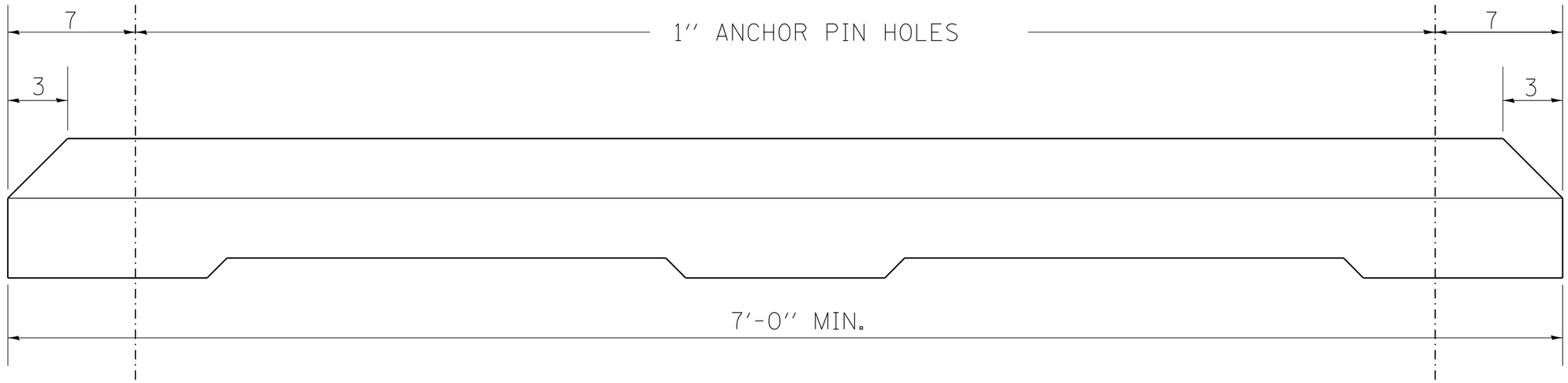

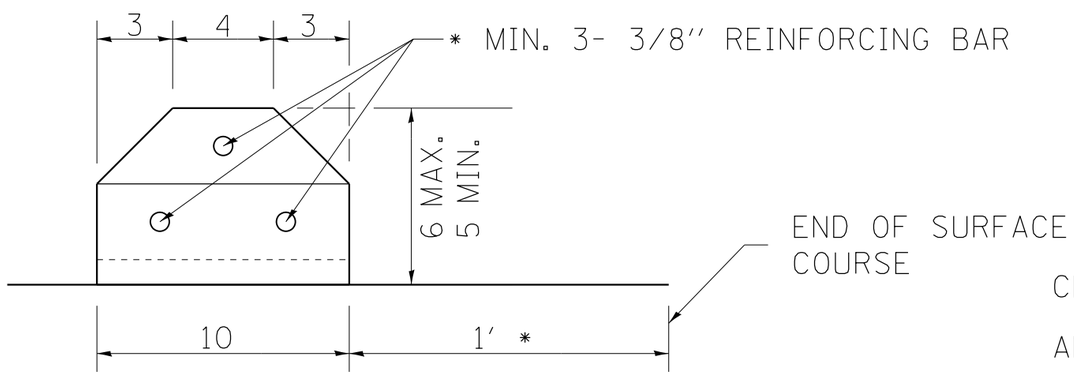

* OR AS DIRECTED BY THE ENGINEER.

GENERAL NOTES

CLASS SI CONCRETE SHALL BE USED THROUGHOUT.

ANCHOR PINS SHALL BE 3/4 DIAMETER, 36 LONG.

THE COST OF THE MATERIAL, LABOR AND EQUIPMENT NECESSARY TO INSTALL THE PARKING BLOCKS WITH ANCHOR PINS SHALL BE INCLUDED IN THE CONTRACT UNIT PRICE PER EACH FOR PARKING BLOCKS.

ALL DIMENSIONS ARE IN INCHES UNLESS OTHERWISE NOTED.

PLOT DATE = Thu Nov 13 11:31:52 2014

REVISED - 10-03-11	**REGION 2 / DISTRICT 2 STANDARD**				F.A. RTE.	SECTION	COUNTY	TOTAL SHEETS	SHEET NO.
REVISED -									
REVISED -							CONTRACT NO.		
REVISED -	SCALE: 1.0000 '/ in.	SHEET NO. OF SHEETS	STA.	TO STA.	FED. ROAD DIST. NO.	ILLINOIS	FED. AID PROJECT		

PAVEMENT PATCHING FOR HOT-MIX ASPHALT SURFACED PAVEMENT

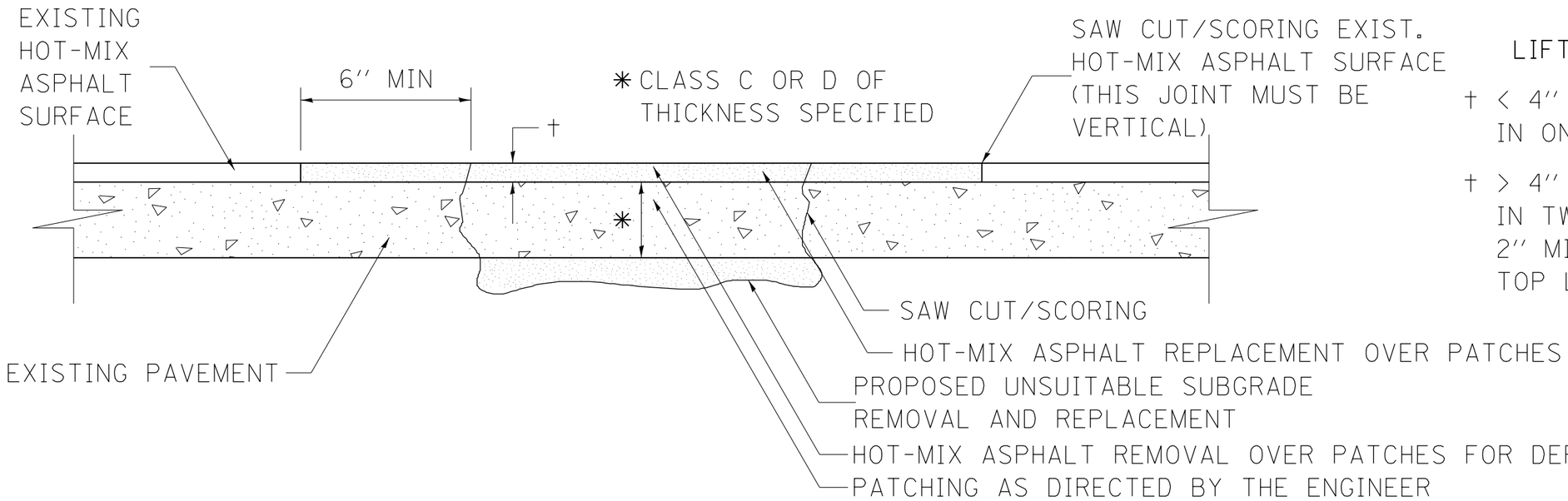

LIFT PLACEMENT:

† < 4'' MAY BE PLACED IN ONE LIFT.

† > 4'' TO BE PLACED IN TWO LIFTS WITH 2'' MIN. COMPACTED TOP LIFT.

SEQUENCE OF CONSTRUCTION:

1. REMOVE THE EXISTING HOT-MIX ASPHALT SURFACE.
2. RESIDENT ENGINEER WILL DETERMINE IF LOCATION IS TO BE PATCHED OR TO ONLY REPLACE HOT-MIX ASPHALT SURFACE.
3. REMOVE AND REPLACE FULL DEPTH PATCHES AT LOCATIONS DIRECTED BY THE ENGINEER.
4. REPLACE HOT-MIX ASPHALT SURFACE OVER FULL DEPTH PATCHES AND AT LOCATIONS OF HOT-MIX ASPHALT SURFACE REMOVAL.

GENERAL NOTES:

1. FOR BASIS OF PAYMENT: SEE THE RECURRING SPECIAL PROVISION ''PATCHING WITH HOT-MIX ASPHALT OVERLAY REMOVAL''.

ALL DIMENSIONS ARE IN INCHES UNLESS OTHERWISE NOTED.

PLOT DATE = Thu Nov 13 11:31:53 2014

REVISED - 10-03-11	REGION 2 / DISTRICT 2 STANDARD				F.A. RTE.	SECTION	COUNTY	TOTAL SHEETS	SHEET NO.
REVISED -									
REVISED -							CONTRACT NO.		
REVISED -	SCALE: 1.0000 '/ in.	SHEET NO. OF SHEETS	STA.	TO STA.	FED. ROAD DIST. NO.	ILLINOIS	FED. AID PROJECT		

PAVEMENT PATCHING DETAIL

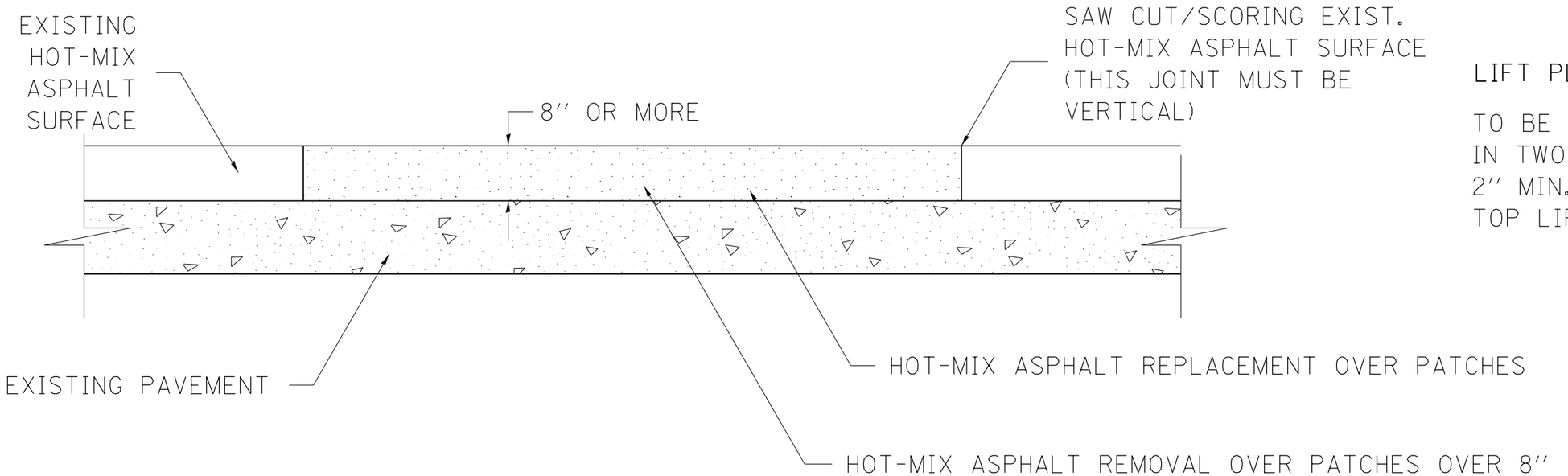

LIFT PLACEMENT:

TO BE PLACED IN TWO LIFTS WITH 2'' MIN. COMPACTED TOP LIFT.

SEQUENCE OF CONSTRUCTION:

1. REMOVE THE EXISTING HOT-MIX ASPHALT SURFACE.
2. REPLACE HOT-MIX ASPHALT SURFACE.

GENERAL NOTES:

1. FOR BASIS OF PAYMENT: SEE THE RECURRING SPECIAL PROVISION ''PATCHING WITH HOT-MIX ASPHALT OVERLAY REMOVAL''.

ALL DIMENSIONS ARE IN INCHES UNLESS OTHERWISE NOTED.

PLOT DATE = Thu Nov 13 11:31:53 2014

REVISED - 10-03-11	REGION 2 / DISTRICT 2 STANDARD					F.A. RTE.	SECTION	COUNTY	TOTAL SHEETS	SHEET NO.
REVISED -										
REVISED -								CONTRACT NO.		
REVISED -	SCALE: 1.0000 '/ in.	SHEET NO.	OF	SHEETS	STA.	TO STA.	FED. ROAD DIST. NO.	ILLINOIS	FED. AID PROJECT	

THRUST BLOCK DETAILS

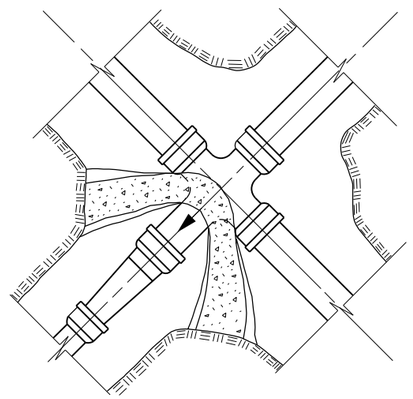

REDUCING CROSS

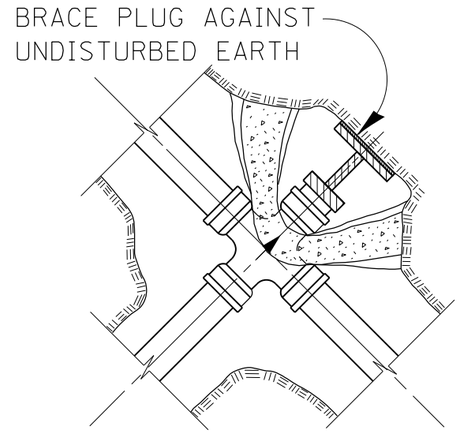

PLUGGED CROSS

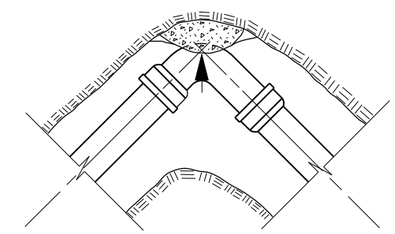

90° ELBOW

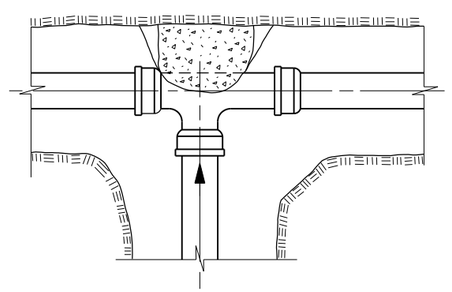

TEE

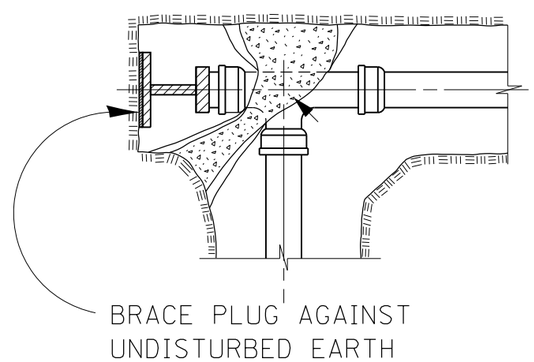

PLUGGED TEE

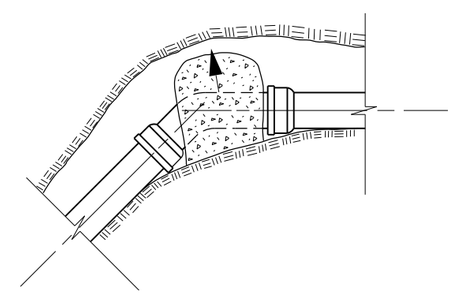

VERTICAL BEND

NOTES:
ALL BLOCKS TO BEAR AGAINST UNDISTURBED EARTH.
ARROWS INDICATE DIRECTION OF THRUST.
ALL BLOCKS TO BE CLASS SI CONCRETE.
ALL FITTINGS SHOWN IN PLAN EXCEPT VERTICAL BEND.

ALL DIMENSIONS ARE IN INCHES UNLESS OTHERWISE NOTED.

PLOT DATE = Thu Nov 13 11:31:54 2014

REVISED - 10-03-11	REGION 2 / DISTRICT 2 STANDARD				F.A. RTE.	SECTION	COUNTY	TOTAL SHEETS	SHEET NO.
REVISED -									
REVISED -							CONTRACT NO.		
REVISED -	SCALE: 1.0000 ' / in.	SHEET NO.	OF	SHEETS	STA.	TO STA.	FED. ROAD DIST. NO.	ILLINOIS	FED. AID PROJECT

THRUST BLOCK DETAILS **34.4**

SIDEWALK AND DRIVEWAY PAVEMENT PAY AREAS

PAY FOR AS

- SIDEWALK REMOVAL
- DRIVEWAY PAVEMENT REMOVAL
- PCC SIDEWALK 5
- PCC DRIVEWAY PAVEMENT 7

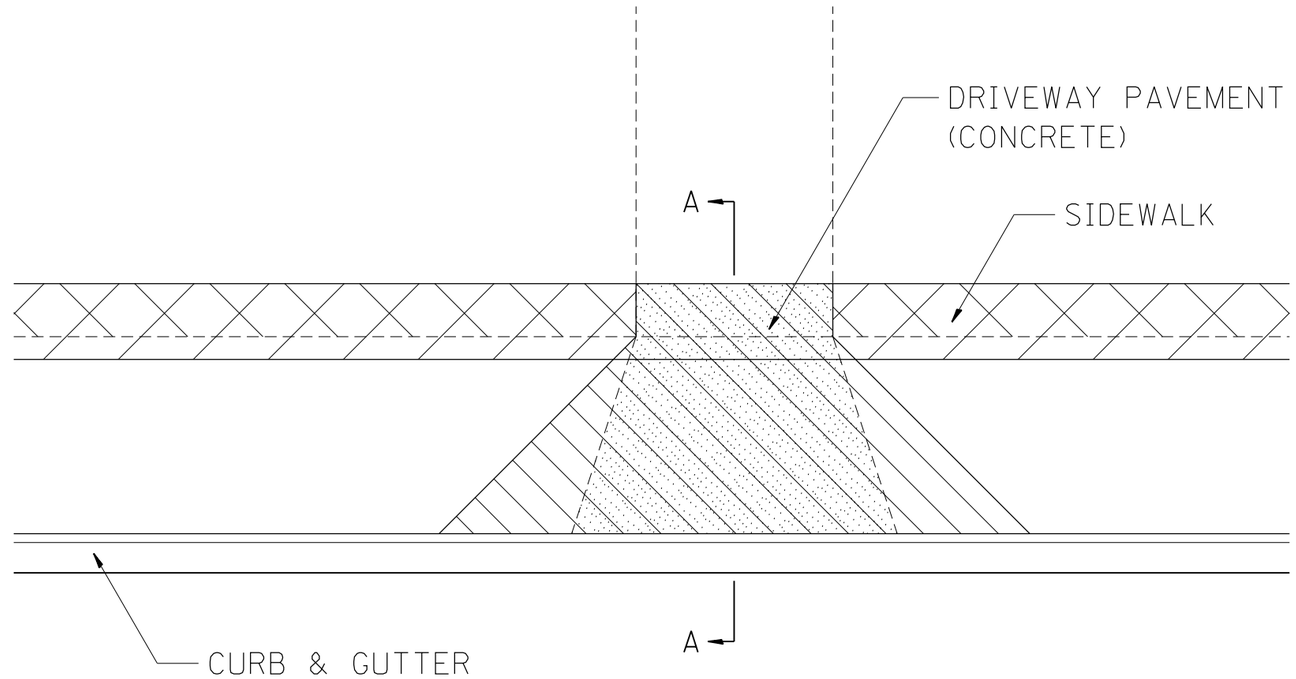

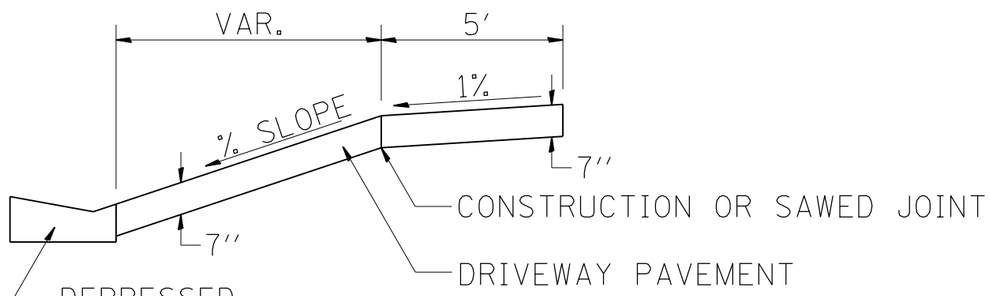

SECTION A-A

FOR DETAILS ON DIMENSIONS AND GRADES, SEE DISTRICT STANDARD 25.1 OR PLANS.

ALL DIMENSIONS ARE IN INCHES UNLESS OTHERWISE NOTED.

REVISED - 6-27-14	REGION 2 / DISTRICT 2 STANDARD			F.A. RTE.	SECTION	COUNTY	TOTAL SHEETS / SHEET NO.
REVISED - 10-03-11							
REVISED -						CONTRACT NO.	
REVISED -	SCALE: 1.0000 '/ in.	SHEET NO. OF SHEETS	STA. TO STA.	FED. ROAD DIST. NO.	ILLINOIS	FED. AID PROJECT	

PLOT DATE = Thu Nov 13 11:31:55 2014

CONCRETE GUTTER, TYPE A (SPECIAL)

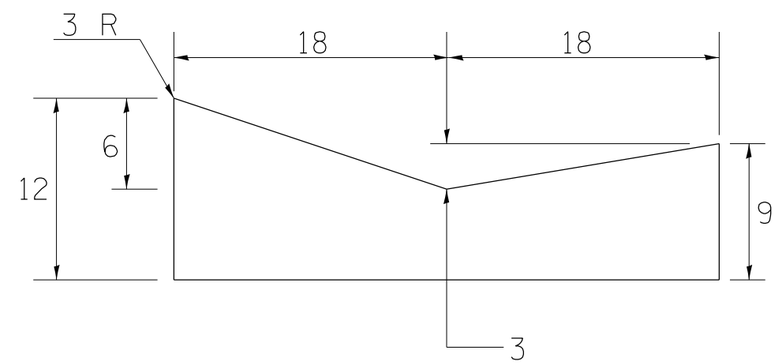

NOTES:

THIS WORK SHALL BE DONE IN ACCORDANCE WITH THIS DETAIL AND STANDARD 606101
THIS WORK SHALL BE PAID FOR AT THE CONTRACT UNIT PRICE PER FOOT FOR CONCRETE GUTTER, TYPE A (SPECIAL).

ALL DIMENSIONS ARE IN INCHES UNLESS OTHERWISE NOTED.

PLOT DATE = Thu Nov 13 11:31:55 2014

REVISED - 10-03-11	REGION 2 / DISTRICT 2 STANDARD				F.A. RTE.	SECTION	COUNTY	TOTAL SHEETS	SHEET NO.
REVISED -									
REVISED -							CONTRACT NO.		
REVISED -	SCALE: 1.0000 ' / in.	SHEET NO. OF SHEETS	STA.	TO STA.	FED. ROAD DIST. NO.	ILLINOIS	FED. AID PROJECT		

DELINEATOR AND POST ORIENTATION

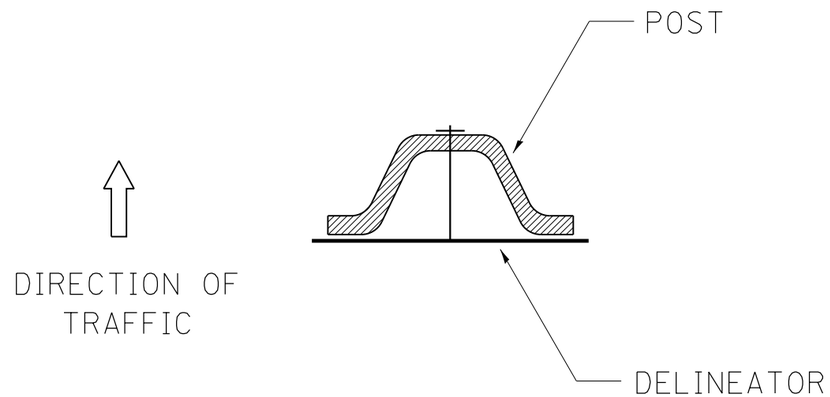

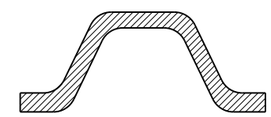

SECTION D-D

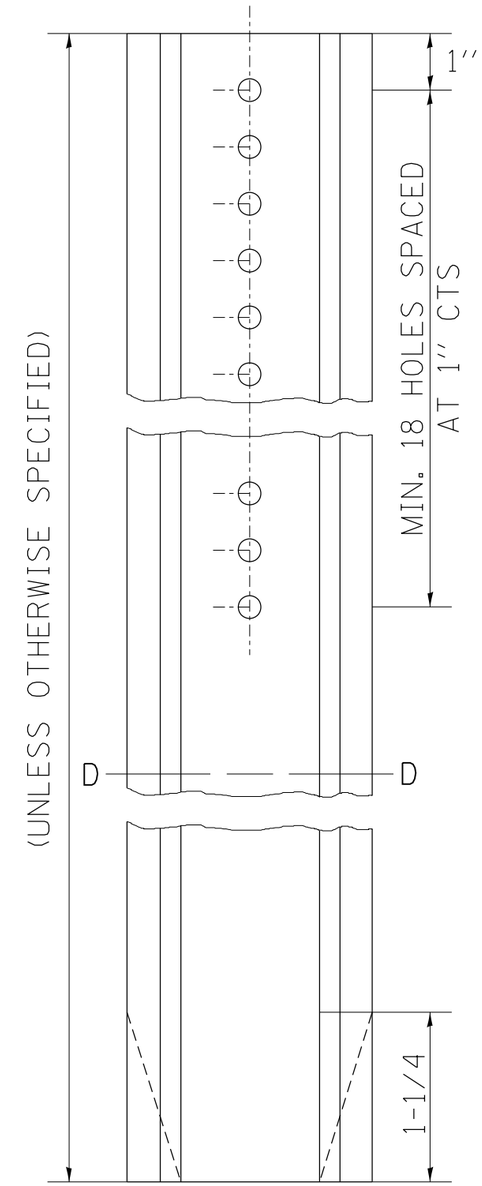

DELINEATORS SHALL BE INSTALLED ACCORDING TO STANDARD 635001 EXCEPT THAT THE POST SHALL BE ROTATED 180° . THE POST WILL HAVE THE WIDE SIDE FACING TRAFFIC AND THE DELINEATOR ATTACHECD AS SHOWN ABOVE.

ALL DIMENSIONS ARE IN INCHES UNLESS OTHERWISE NOTED.

PLOT DATE = Thu Nov 13 11:31:56 2014

REVISED - 10-03-11	REGION 2 / DISTRICT 2 STANDARD				F.A. RTE.	SECTION	COUNTY	TOTAL SHEETS	SHEET NO.
REVISED -									
REVISED -							CONTRACT NO.		
REVISED -	SCALE: 1.0000 ' / in.	SHEET NO. OF SHEETS	STA.	TO STA.	FED. ROAD DIST. NO.	ILLINOIS	FED. AID PROJECT		

EDGE OF PAVEMENT REPAIR

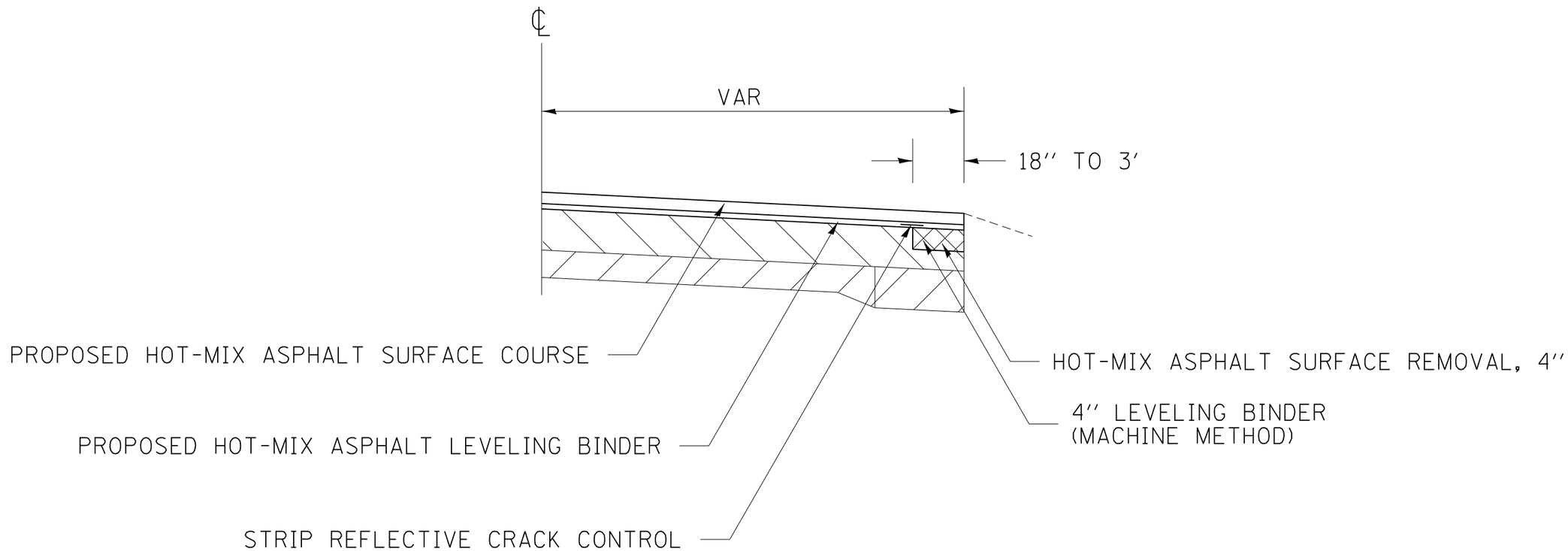

PLOT DATE = Thu Nov 13 11:31:57 2014

REVISED - 4-04-11	REGION 2 / DISTRICT 2 STANDARD				F.A. RTE.	SECTION	COUNTY	TOTAL SHEETS	SHEET NO.
REVISED -									
REVISED -							CONTRACT NO.		
REVISED -	SCALE: 1.0000 '/ in.	SHEET NO. OF SHEETS	STA.	TO STA.	FED. ROAD DIST. NO.	ILLINOIS	FED. AID PROJECT		

ROAD CLOSED TO OVERSIZED LOADS

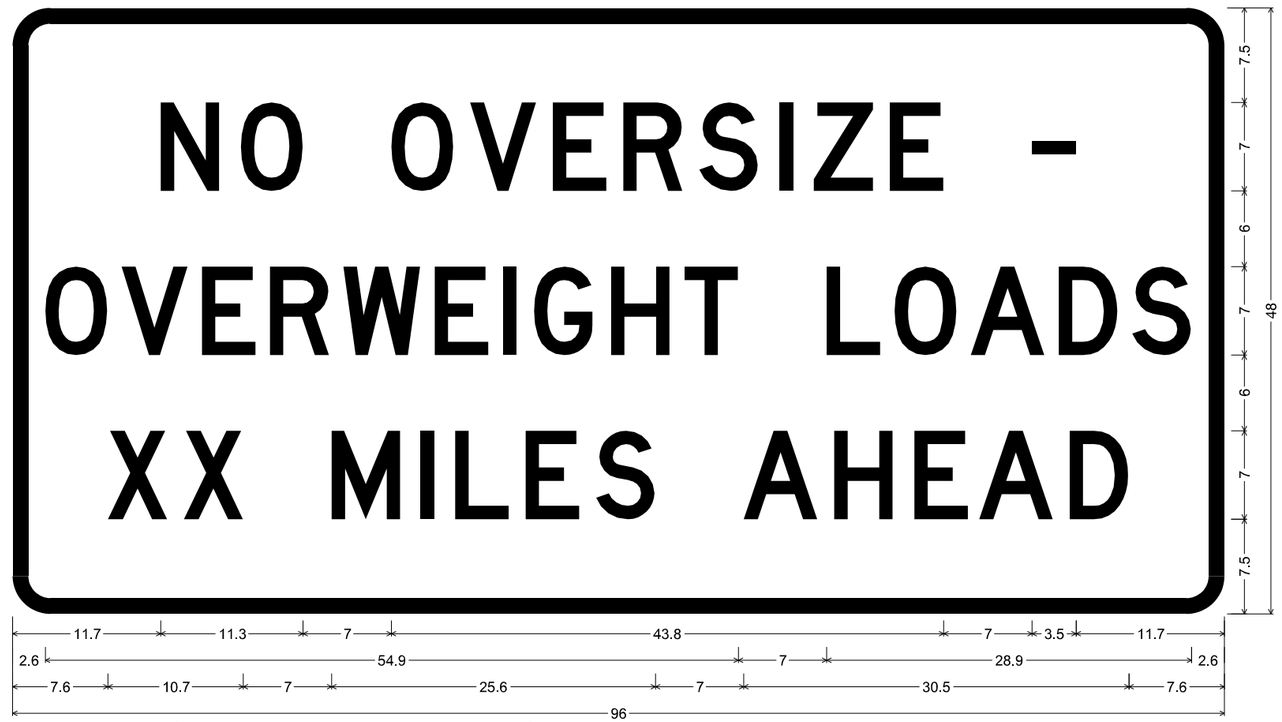

Permit Loads - Loads Over 13 Feet; 3.0" Radius, 1.3" Border, Black on Orange;
[NO OVERSIZE -] D; [OVERWEIGHT LOADS] D 85% spacing; [XX MILES AHEAD] D;
Table of letter and object lefts.

N	O	O	V	E	R	S	I	Z	E	-					
11.7	18.1	30.0	36.2	42.8	48.4	54.4	60.7	63.5	69.5	80.8					
O	V	E	R	W	E	I	G	H	T	L	O	A	D	S	
2.6	8.6	15.0	20.4	26.2	33.4	38.8	41.3	47.4	53.2	64.5	69.9	75.9	82.9	88.7	
X	X	M	I	L	E	S	A	H	E	A	D				
7.6	13.6	25.3	32.3	35.1	40.6	46.2	47.9	65.1	71.4	76.6	83.7				

All work to furnish and install these signs shall be included in the cost of the Traffic Control Standards and shall not be paid for separately.

ALL DIMENSIONS ARE IN INCHES UNLESS OTHERWISE NOTED.

PLOT DATE = Thu Nov 13 11:31:57 2014

REVISED - 3-11-09	REGION 2 / DISTRICT 2 STANDARD	F.A. RTE.	SECTION	COUNTY	TOTAL SHEETS	SHEET NO.
REVISED -						
REVISED -				CONTRACT NO.		
REVISED -	SCALE: 1.0000 ' / in. SHEET NO. OF SHEETS STA. TO STA.	FED. ROAD DIST. NO.	ILLINOIS	FED. AID PROJECT		

REQUIRED COLD MILLED SURFACE TEXTURE

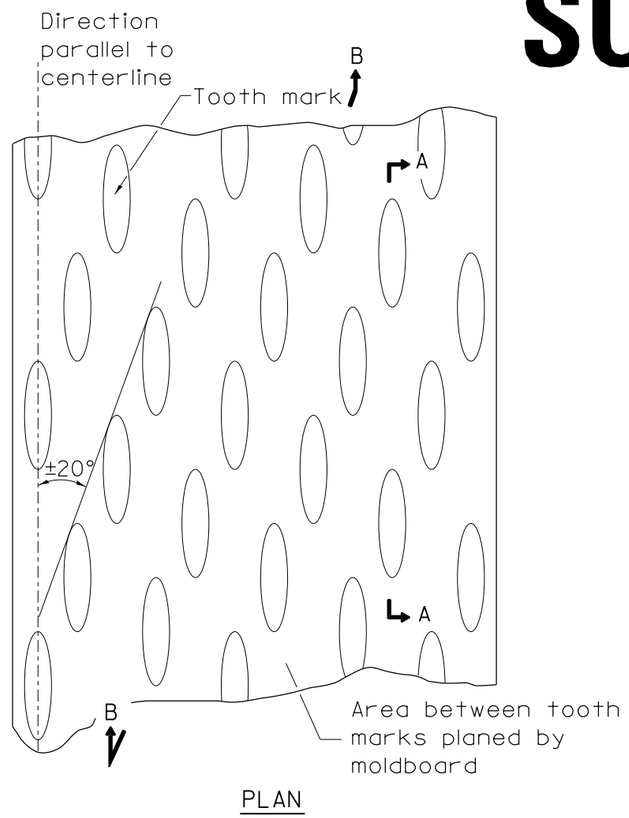

PLAN

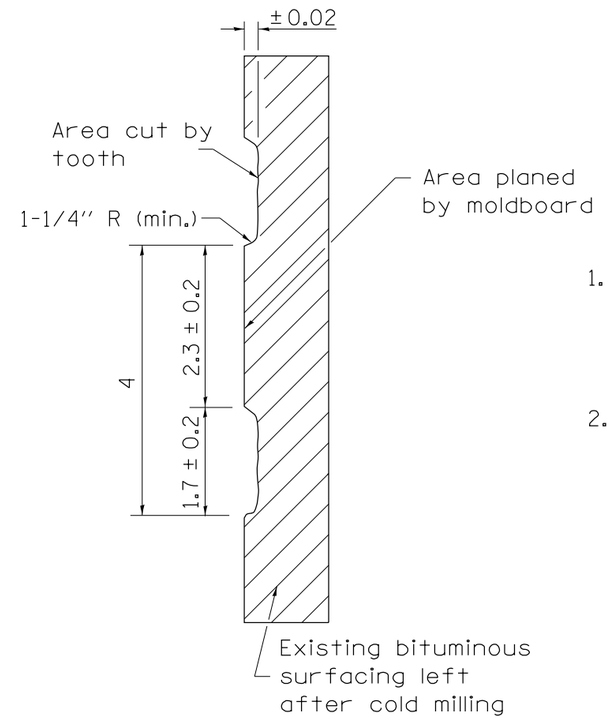

SECTION A-A

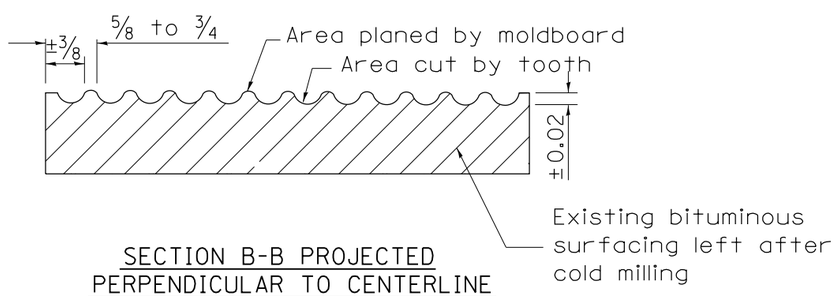

SECTION B-B PROJECTED PERPENDICULAR TO CENTERLINE

NOTES

1. Cold Milling shall consist of two processes: Cutting with carbide teeth mounted on a rotating drum, and planing with a moldboard mounted immediately behind the cutting drum.

2. Other similar patterns will be acceptable if they consist of a smooth, flat, planed surface interspersed with a pattern of discontinuous longitudinal striations.

ALL DIMENSIONS ARE IN INCHES UNLESS OTHERWISE NOTED.

PLOT DATE = Thu Nov 13 11:31:58 2014

REVISED - 10-03-11	REGION 2 / DISTRICT 2 STANDARD				F.A. RTE.	SECTION	COUNTY	TOTAL SHEETS	SHEET NO.
REVISED -									
REVISED -							CONTRACT NO.		
REVISED -	SCALE: 1.0000 ' / in.	SHEET NO. OF SHEETS	STA.	TO STA.	FED. ROAD DIST. NO.	ILLINOIS	FED. AID PROJECT		

SLAB MOVEMENT DETECTION DEVICE

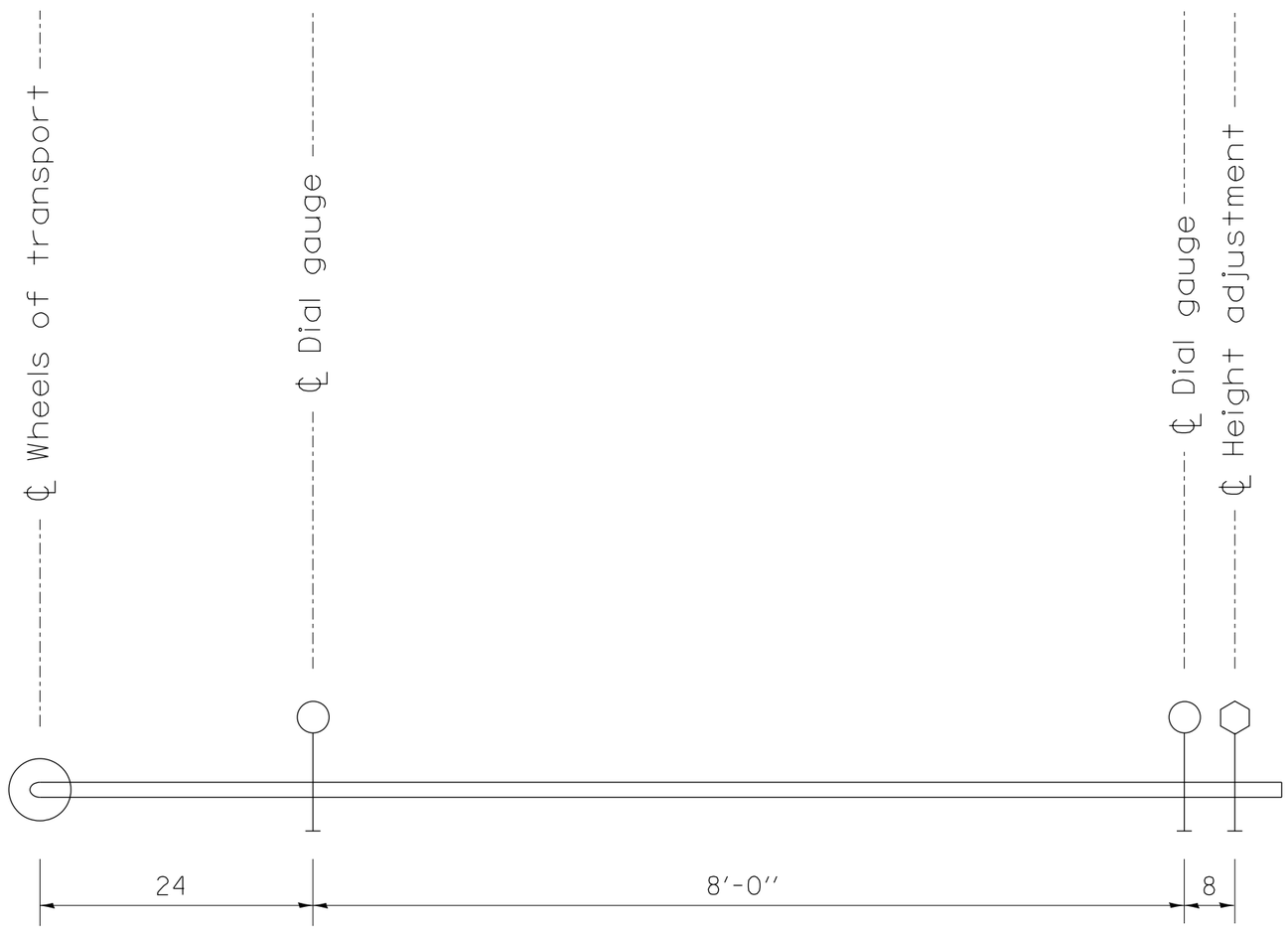

ELEVATION

NOTES

Dial gauges shall be spring loaded in order to measure both extension and compression.

ALL DIMENSIONS ARE IN INCHES UNLESS OTHERWISE NOTED.

PLOT DATE = Thu Nov 13 11:31:58 2014

REVISED - 10-03-11	REGION 2 / DISTRICT 2 STANDARD				F.A. RTE.	SECTION	COUNTY	TOTAL SHEETS	SHEET NO.
REVISED -									
REVISED -							CONTRACT NO.		
REVISED -	SCALE: 1.0000 ' / in.	SHEET NO. OF SHEETS	STA.	TO STA.	FED. ROAD DIST. NO.	ILLINOIS	FED. AID PROJECT		

AERIAL SPEED CHECK ZONES

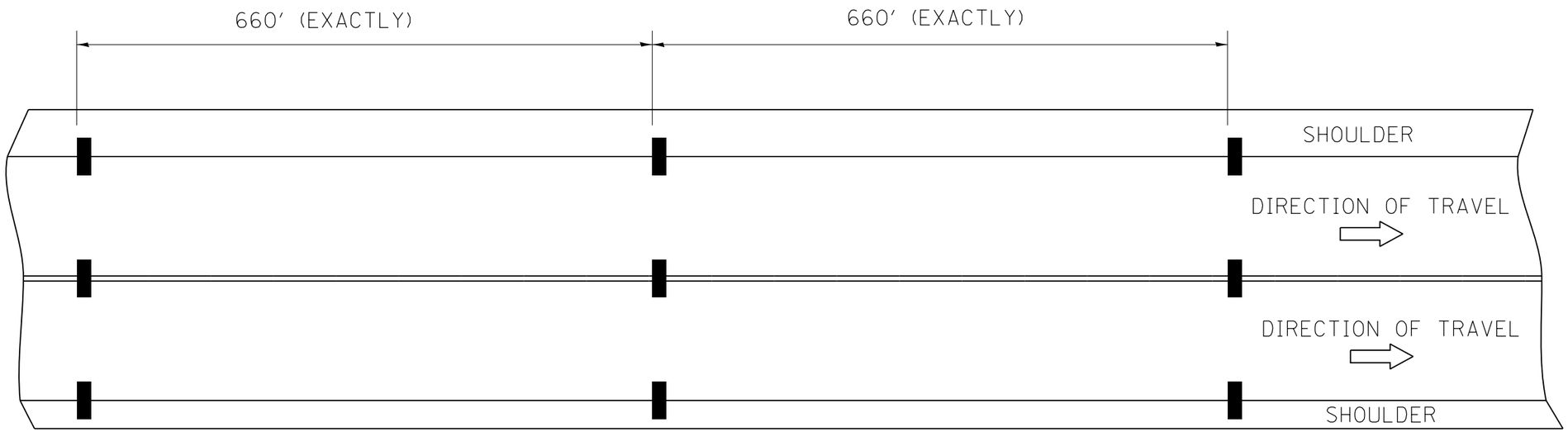

USE THERMOPLASTIC PAVEMENT MARKINGS

PAVEMENT MARKING DETAIL

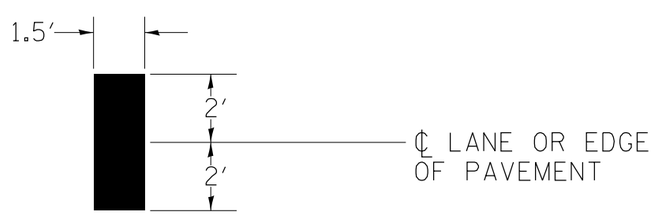

POLICE AERIAL SPEED CHECK ZONES

ESTABLISHED ZONES AND NEW ZONES REQUESTED BY THE ILLINOIS STATE POLICE SHALL BE MARKED CONSISTENT WITH THE REQUIREMENTS OF SECTION 3B.21 OF THE MUTCD. WHEN NEW ZONES ARE PLACED IT WILL BE NECESSARY TO HAVE A REPRESENTATIVE OF THE STATE POLICE PRESENT SO THAT THE ACCURACY OF THE MEASURMENT CAN BE ATTESTED TO IN COURT.

ILLINOIS STATE POLICE

DISTRICT 1 STERLING 815/632-4010 CARROLL, LEE, OGLE, WHITESIDE
DISTRICT 7 EAST MOLINE 309/752-4915 HENRY, ROCK ISLAND
DISTRICT 16 PECATONICA 815/239-1152 BOONE, JO DAVIESS, STEPHENSON, WINNEBAGO

BASIS OF PAYMENT:

THIS WORK SHALL BE PAID FOR AT THE CONTRACT UNIT PRICE PER FOOT FOR AERIAL SPEED CHECK MARKING.

PLOT DATE = Thu Nov 13 11:31:59 2014

REVISED - 6-27-14	**REGION 2 / DISTRICT 2 STANDARD**				F.A. RTE.	SECTION	COUNTY	TOTAL SHEETS	SHEET NO.
REVISED - 8-27-13									
REVISED - 10-03-11							CONTRACT NO.		
REVISED -	SCALE: 1.0000 ′ / in.	SHEET NO. OF SHEETS	STA.	TO STA.	FED. ROAD DIST. NO.	ILLINOIS	FED. AID PROJECT		

TYPICAL BENCHING ON EXISTING EMBANKMENT

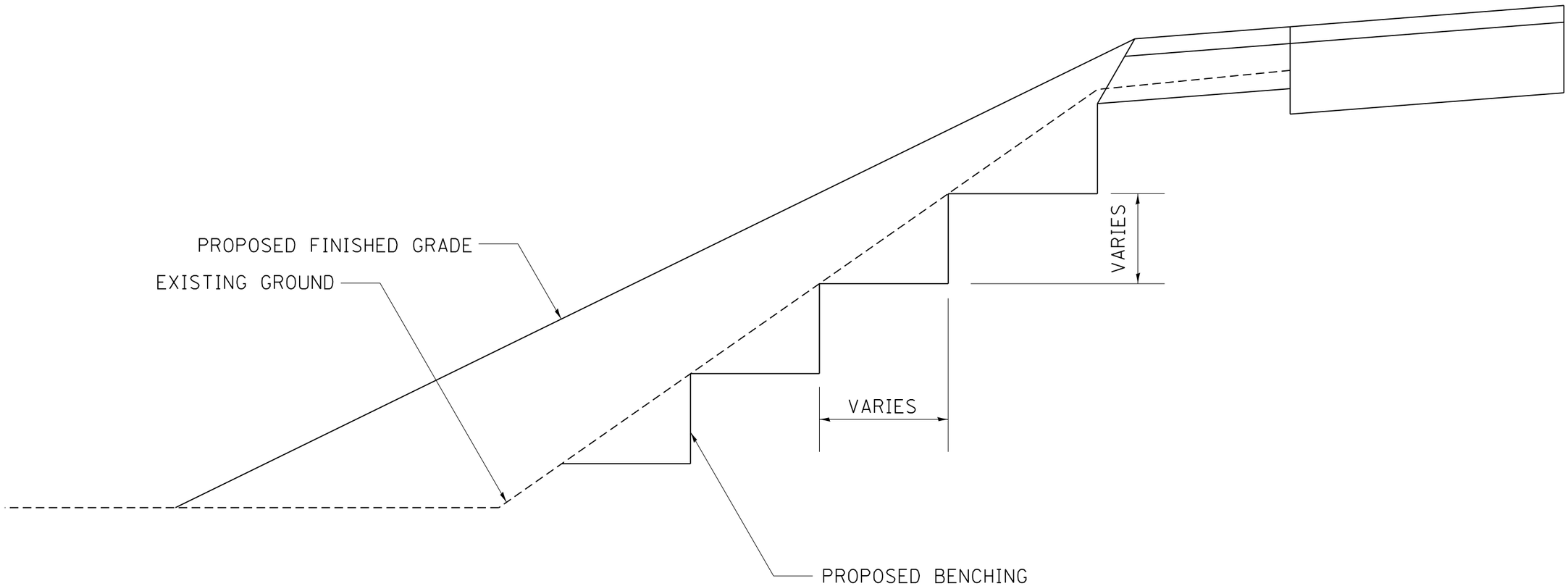

REVISED - 2-22-06	**REGION 2 / DISTRICT 2 STANDARD**				F.A. RTE.	SECTION	COUNTY	TOTAL SHEETS	SHEET NO.
REVISED -									
REVISED -							CONTRACT NO.		
REVISED -	SCALE: 1.0000 ' / in.	SHEET NO. OF SHEETS	STA.	TO STA.	FED. ROAD DIST. NO.	ILLINOIS	FED. AID PROJECT		

PLOT DATE = Thu Nov 13 11:32:00 2014

LAND SECTION & REFERENCE MARKERS

REFERENCE MARKER & LAND SECTION MARKER

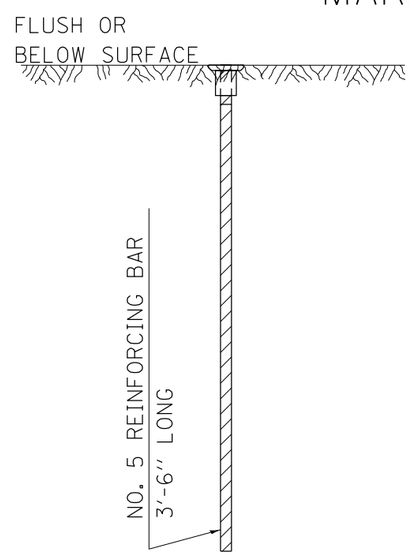

SECTION

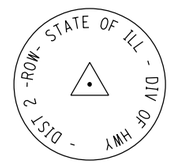

R.O.W. CAP

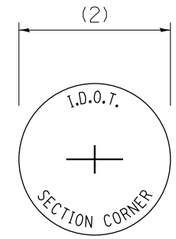

SECTION CORNER CAP

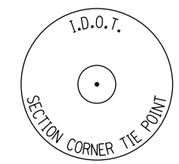

SECTION CORNER TIE POINT CAP

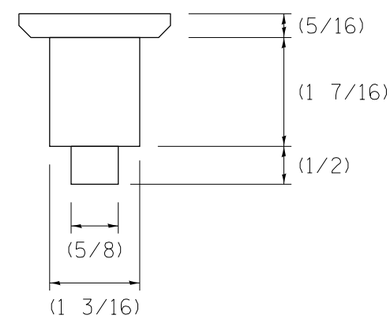

CAP DETAIL

METHOD OF REFERENCING MARKERS

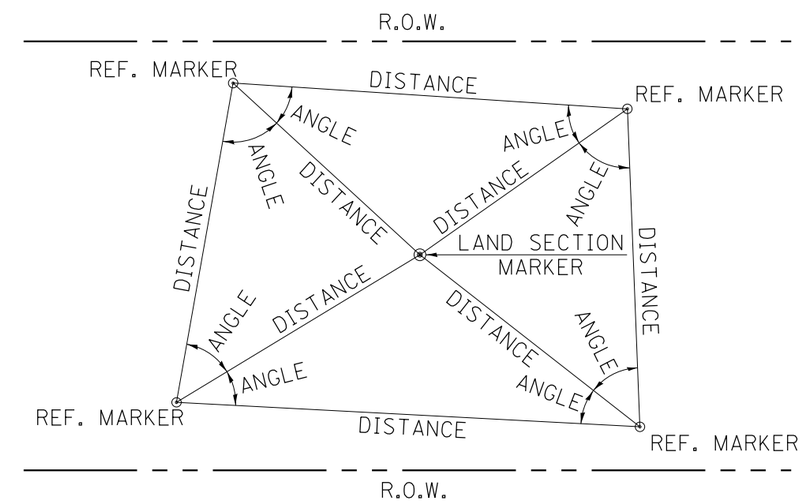

METHOD OF REFERENCING POINTS

REFERENCE MARKERS SHALL BE USED TO TIE IN PERMANENT LAND SECTION AND 1/4 SECTION CORNERS. WHERE LAND SECTION MARKERS FALL IN THE SHOULDERS OR GRAVEL SURFACES, THE TOP OF THE BAR SHALL BE KEPT 3" BELOW THE SURFACE. LAND SECTION MARKERS LOCATED IN TRAFFIC LANES SHALL BE REPLACED BY CORE DRILL AND RESETTING PIN.

ALUMINUM CAPS SHALL BE PLACED ON TOP OF THE REINFORCEMENT BAR. THERE ARE 3 TYPES OF CAPS, ONE FOR THE RIGHT-OF-WAY CORNERS, ONE FOR THE SECTION CORNERS AND ONE FOR THE SECTION CORNER TIE POINTS. THE CAPS WILL BE SUPPLIED BY THE SURVEYOR WHO IS RESPONSIBLE FOR MONUMENTING CORNERS.

- USE INSTRUMENT TIES TO NEARBY LAND-MARKS (STEEPLES, TOWERS, SILOS, ETC...)
- IN CULTIVATED FIELDS, SET 28" OR MORE BELOW GROUND SURFACE.
- IN FENCE LINE OR PROTECTED AREA SET TOP AT GROUND LEVEL SO AS NOT TO BE DISTURBED BY MOWING.

ALL DIMENSIONS ARE IN INCHES UNLESS OTHERWISE NOTED.

PLOT DATE = Thu Nov 13 11:32:00 2014

REVISED - 3-05-10	**REGION 2 / DISTRICT 2 STANDARD**				F.A. RTE.	SECTION	COUNTY	TOTAL SHEETS	SHEET NO.
REVISED -									
REVISED -							CONTRACT NO.		
REVISED -	SCALE: 1.0000 ' / in.	SHEET NO. OF SHEETS	STA.	TO STA.	FED. ROAD DIST. NO.	ILLINOIS	FED. AID PROJECT		

TREE WALL

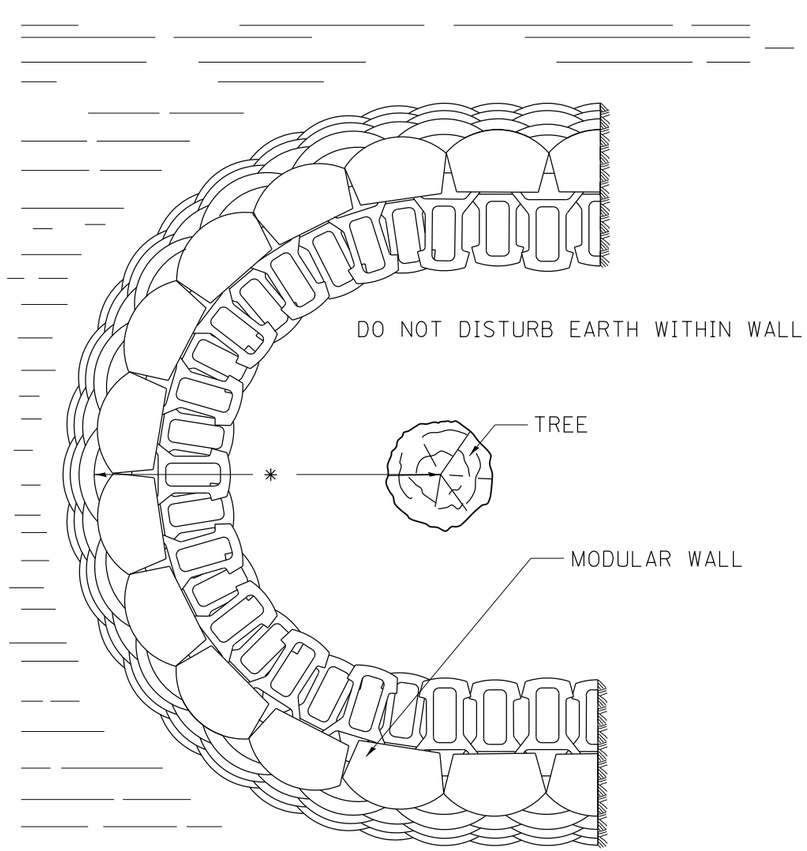

PLAN

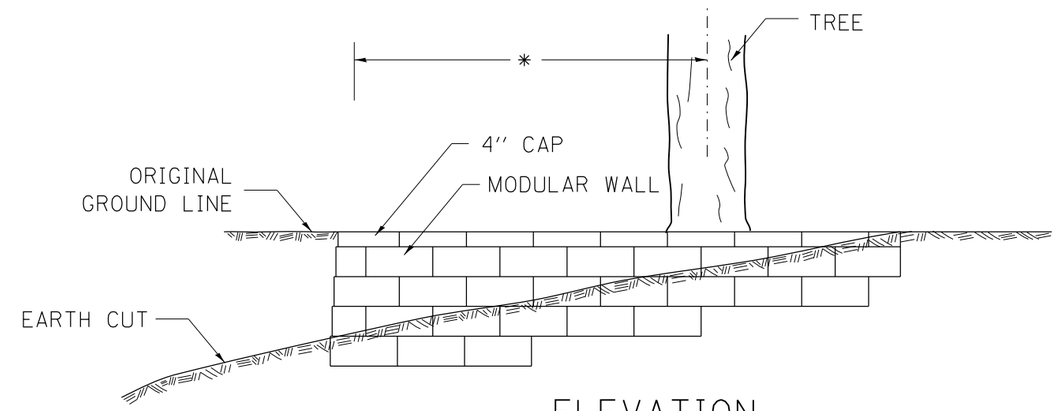

ELEVATION

HEIGHT OF WALL DEPENDENT ON SLOPE OF THE CUT.

* THE RADIUS OF THE TREE WALL SHALL BE DETERMINED BY MULTIPLING 6 BY THE DIAMETER OF THE TREE, WITH A MAXIMUM OF A 12 FOOT RADIUS.

USE 8'' HIGH BLOCKS EXCEPT WHEN HEIGHT OF WALL IS LESS THAN 24'', THEN 4'' HIGH BLOCKS SHALL BE USED.

NOTES

SPECIAL CARE SHALL BE TAKEN BY THE CONTRACTOR NOT TO DISTURB THE EARTH OR THE ROOTS WITHIN THE PROPOSED TREE WALL.

THESE TREE WALLS SHALL BE PAID FOR AT THE CONTRACT UNIT PRICE PER SQUARE FOOT FOR ''SEGMENTAL CONCRETE BLOCK WALL'' INCLUDED IN THIS SHALL BE THE FACE OF THE WALL THAT ARE BURIED.

ALL DIMENSIONS ARE IN INCHES UNLESS OTHERWISE NOTED.

PLOT DATE = Thu Nov 13 11:32:01 2014

REVISED - 10-03-11	**REGION 2 / DISTRICT 2 STANDARD**			F.A. RTE.	SECTION	COUNTY	TOTAL SHEETS	SHEET NO.
REVISED -								
REVISED -						CONTRACT NO.		
REVISED -	SCALE: 1.0000 '/ in.	SHEET NO. OF SHEETS	STA. TO STA.	FED. ROAD DIST. NO.	ILLINOIS	FED. AID PROJECT		

TREE WALL 70.4

DETAIL OF CONCRETE STEPS

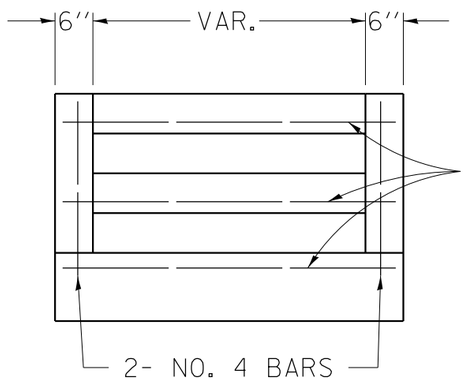

END ELEVATION

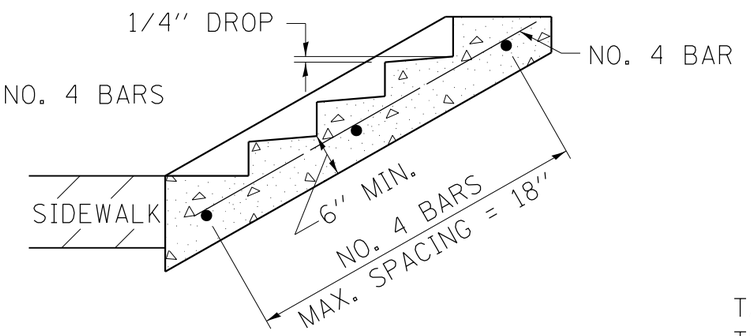

SECTION A-A

TABLE OF TREADS & RISERS

SLOPE	TREAD	RISER
1:2	12''	6''
1:3	15''	5''
1:4	17''	4 1/4''

WHERE SLOPES FALL BETWEEN THOSE SHOWN IN THE TABLE ABOVE, THE STAIR RAIL SHOULD FIT THE SLOPE AND THE TREAD IN INCHES x THE RISER IN INCHES SHOULD BE BETWEEN 72 AND 78.

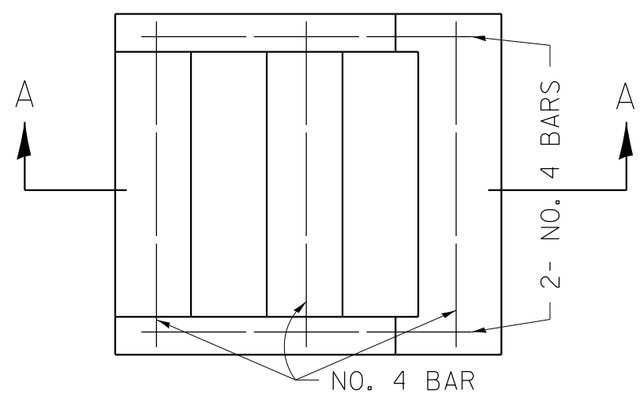

PLAN

EXAMPLE:

FOR A 1:4 SLOPE USE y = RISER HEIGHT $4y^2 = 75''$.
SOLVING $y^2 = \frac{75''}{4}$, y= 4.3'' (USE 4 1/4'' FOR CONVENIENCE.)

TREAD WOULD THEN BE 4 1/4'' x 4 = 17''

COST OF REINFORCEMENT BARS SHALL BE PAID FOR AT THE CONTRACT UNIT PRICE PER LBS FOR REINFORCEMENT BARS.

CLASS SI CONCRETE SHALL BE USED THROUGHTOUT, WHICH SHALL BE PAID FOR AT THE CONTRACT UNIT PRICE PER CUBIC YARD FOR CONCRETE STEPS

ALL DIMENSIONS ARE IN INCHES UNLESS OTHERWISE NOTED.

PLOT DATE = Thu Nov 13 11:32:01 2014

REVISED - 8-27-13	REGION 2 / DISTRICT 2 STANDARD				F.A. RTE.	SECTION	COUNTY	TOTAL SHEETS	SHEET NO.
REVISED - 10-03-11									
REVISED -							CONTRACT NO.		
REVISED -	SCALE: 1.0000 '/ in.	SHEET NO. OF SHEETS	STA.	TO STA.	FED. ROAD DIST. NO.	ILLINOIS	FED. AID PROJECT		

INLETS, SPECIAL, NO. 3

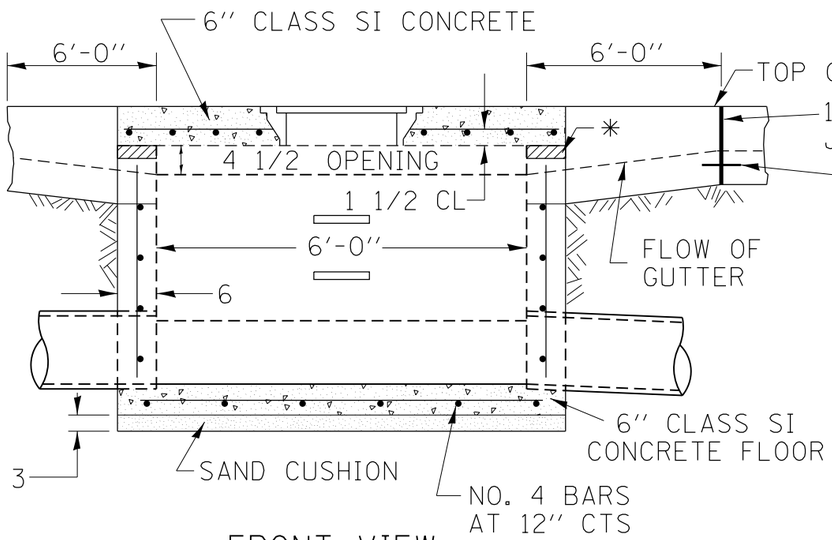

FRONT VIEW

STEPS AT 12 TO 16 CTS.

* THE WALL ADJUSTMENTS SHALL BE MADE WITH CONCRETE BUILDING BRICK OR CLASS SI CONCRETE.

THE HEIGHT OF THE BOX MAY BE CONSTRUCTED 6'' SHORT TO ALLOW FOR FIELD ADJUSTMENTS.

ALL DIMENSIONS ARE IN INCHES UNLESS OTHERWISE NOTED.

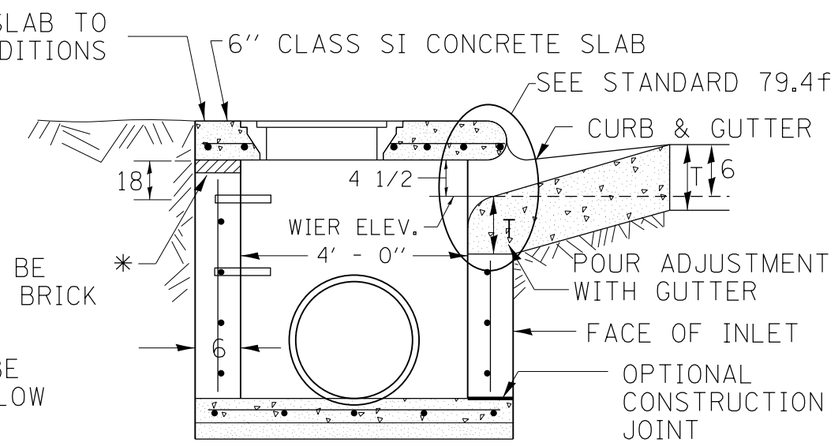

SEC. A-A

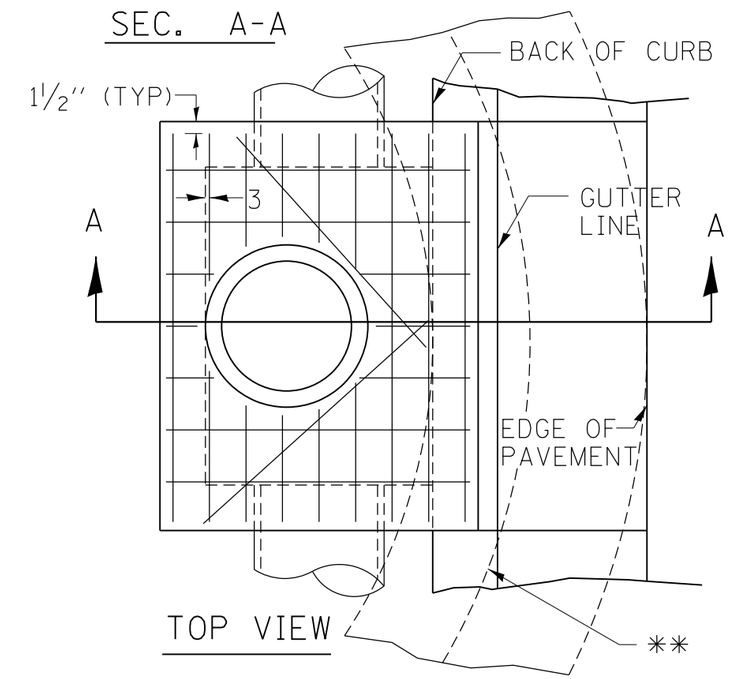

TOP VIEW

** WHEN INLET IS CONSTRUCTED IN RETURN, THE TOP OF SLAB SHALL CONFORM TO THE RADIUS OF THE RETURN.

NOTES

SEE STANDARD 602701 FOR DETAILS OF STEPS.

1'' PREFORMED EXPANSION JOINTS AS SHOWN SHALL BE PROVIDED ON EACH SIDE OF INLET.

CLASS SI CONCRETE OR PRECAST CONCRETE SHALL BE USED TROUGHOUT.

THE SIDE WALLS MAY BE BUILT AS PRECAST SEGMENTAL SECTIONS.

REINFORCEMENT FOR INLETS, SPECIAL, NO. 3 SHALL BE ACCORDING TO DISTRICT STANDARD 79.4g

STEPS SHALL BE OMITTED WHEN DEPTH OF INLET IS LESS THAN 5 FOOT

THE INLET SHALL BE CAST IN PLACE OR PRECAST.

EXCEPT AS NOTED HEREON INLETS, SPECIAL, NO. 3 SHALL BE CONSTRUCTED IN ACCORDANCE WITH SECTION 602 OF THE STANDARD SPECIFICATIONS.

THE CONTRACT UNIT PRICE EACH FOR INLET SPECIAL NO. 3 SHALL INCLUDE THE COST OF FURNISHING AND INSTALLING THE FRAME, LID, REINFORCEMENT BARS, FLOOR AND TOP SLABS, CAST IRON STEPS (IF USED).

THE CURB AND GUTTER WILL BE PAID FOR SEPARATELY AND WILL BE MEASURED THROUGH THE INLET.

THE CURB AND GUTTER ADJACENT TO AND 6 FOOT ON EITHER SIDE OF THE INLET SHALL BE CONSTRUCTED AS SHOWN WITH NO ADDITIONAL COMPENSATION FOR THE TRANSITION.

ALL PIPE UNDERDRAIN CONNECTIONS WHEN SPECIFIED SHALL BE DONE IN ACCORDANCE WITH ART. 601 OF THE STANDARD SPECIFICATIONS. THIS WORK WILL BE PAID FOR AT THE CONTRACT UNIT PRICE PER (FOOT) FOR PIPE UNDERDRAINS OR PIPE UNDERDRAINS (SPECIAL) OF THE DIAMETER SPECIFIED WHICH PRICE SHALL INCLUDE THE CA7 OR CA16 AND THE CONNECTION TO THE INLET.

LIGHT WEIGHT MANHOLE CASTING

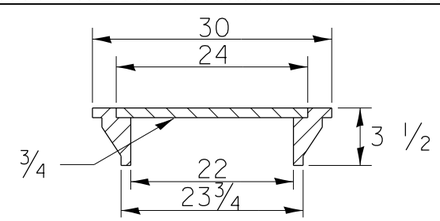

TOTAL WEIGHT 160 LBS.

REVISED - 8-27-13	REGION 2 / DISTRICT 2 STANDARD				F.A. RTE.	SECTION	COUNTY	TOTAL SHEETS	SHEET NO.
REVISED - 10-03-11									
REVISED -							CONTRACT NO.		
REVISED -	SCALE: 1.0000 '/ in.	SHEET NO.	OF	SHEETS	STA.	TO STA.	FED. ROAD DIST. NO.	ILLINOIS	FED. AID PROJECT

PLOT DATE = Thu Nov 13 11:32:02 2014

INLETS, SPECIAL, NO. 4

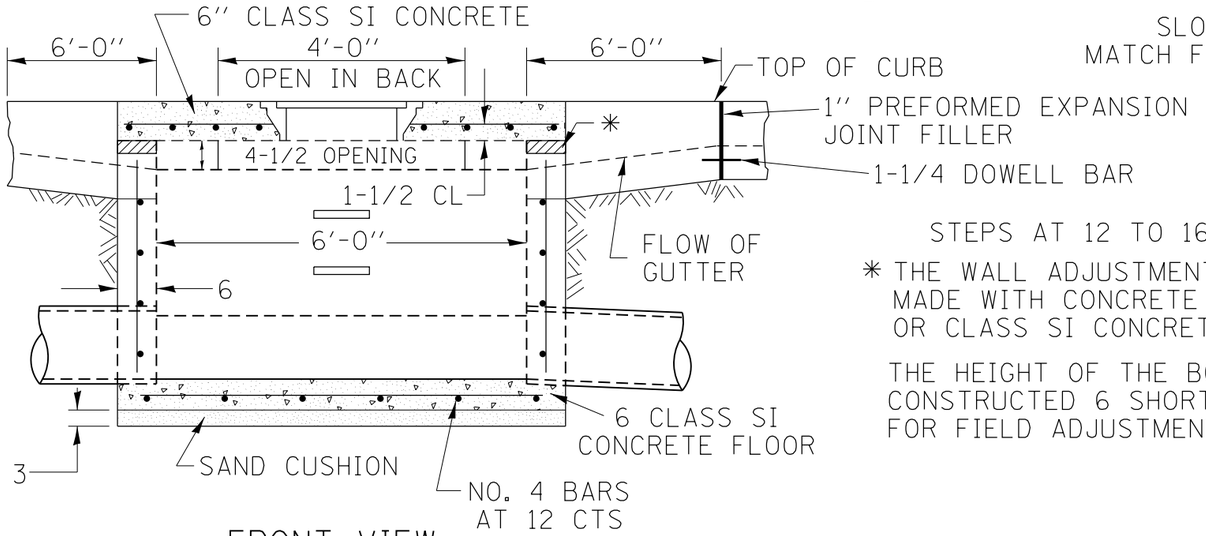

FRONT VIEW

STEPS AT 12 TO 16 CTS.

* THE WALL ADJUSTMENTS SHALL BE MADE WITH CONCRETE BUILDING BRICK OR CLASS SI CONCRETE.

THE HEIGHT OF THE BOX MAY BE CONSTRUCTED 6 SHORT TO ALLOW FOR FIELD ADJUSTMENTS.

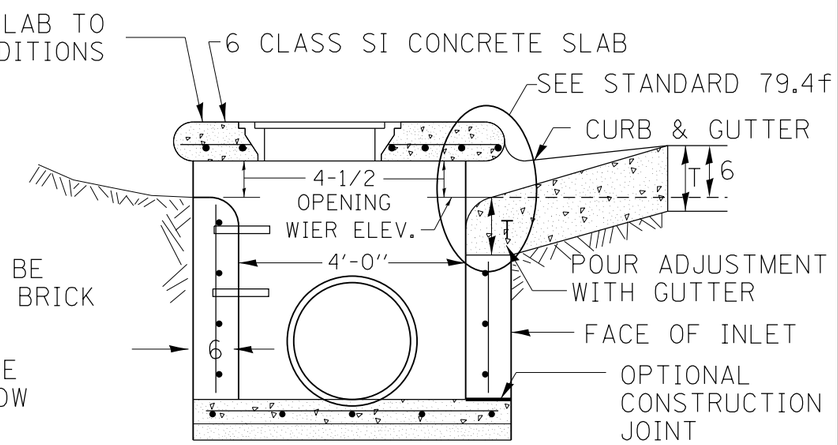

SEC. A-A

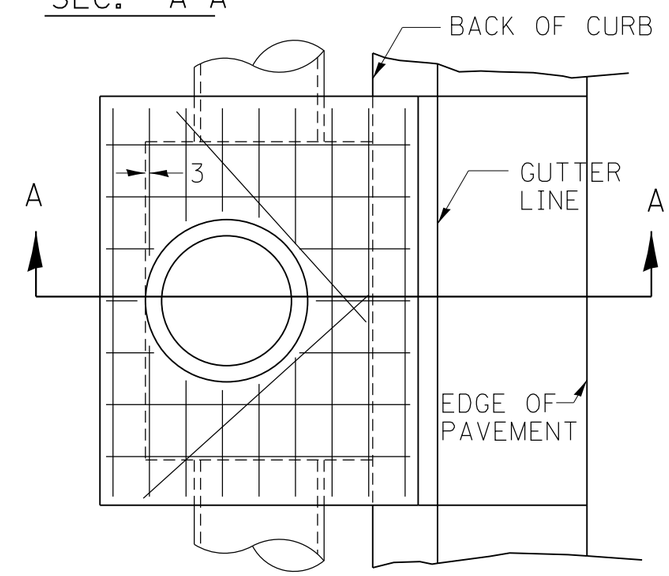

TOP VIEW

ALL DIMENSIONS ARE IN INCHES UNLESS OTHERWISE NOTED.

NOTES

SEE STANDARD 602701 FOR DETAILS OF STEPS.

1'' PREFORMED EXPANSION JOINTS AS SHOWN SHALL BE PROVIDED ON EACH SIDE OF INLET.

CLASS SI CONCRETE OR PRECAST CONCRETE SHALL BE USED TROUGHOUT.

THE SIDE WALLS MAY BE BUILT AS PRECAST SEGMENTAL SECTIONS.

REINFORCEMENT FOR INLETS, SPECIAL, NO. 4 SHALL BE ACCORDING TO DISTRICT STANDARD 79.4g

STEPS SHALL BE OMITTED WHEN DEPTH OF INLET IS LESS THAN 5 FOOT

THE INLET SHALL BE CAST IN PLACE OR PRECAST.

EXCEPT AS NOTED HEREON INLETS, SPECIAL, NO. 4 SHALL BE CONSTRUCTED IN ACCORDANCE WITH SECTION 602 OF THE STANDARD SPECIFICATIONS.

THE CONTRACT UNIT PRICE EACH FOR INLET SPECIAL NO. 4 SHALL INCLUDE THE COST OF FURNISHING AND INSTALLING THE FRAME, LID, REINFORCEMENT BARS, FLOOR AND TOP SLABS, CAST IRON STEPS (IF USED).

THE CURB AND GUTTER WILL BE PAID FOR SEPARATELY AND WILL BE MEASURED THROUGH THE INLET.

THE CURB AND GUTTER ADJACENT TO AND 6 FOOT ON EITHER SIDE OF THE INLET SHALL BE CONSTRUCTED AS SHOWN WITH NO ADDITIONAL COMPENSATION FOR THE TRANSITION.

ALL PIPE UNDERDRAIN CONNECTIONS WHEN SPECIFIED SHALL BE DONE IN ACCORDANCE WITH ART. 601 OF THE STANDARD SPECIFICATIONS. THIS WORK WILL BE PAID FOR AT THE CONTRACT UNIT PRICE PER (FOOT) FOR PIPE UNDERDRAINS OR PIPE UNDERDRAINS (SPECIAL) OF THE DIAMETER SPECIFIED WHICH PRICE SHALL INCLUDE THE CA7 OR CA16 AND THE CONNECTION TO THE INLET.

LIGHT WEIGHT MANHOLE CASTING

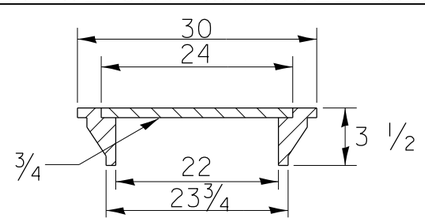

TOTAL WEIGHT 160 LBS.

REVISED - 8-27-13	REGION 2 / DISTRICT 2 STANDARD					F.A. RTE.	SECTION	COUNTY	TOTAL SHEETS / SHEET NO.
REVISED - 10-04-11									
REVISED -								CONTRACT NO.	
REVISED -	SCALE: 1.0000 '/ in.	SHEET NO.	OF	SHEETS	STA.	TO STA.	FED. ROAD DIST. NO.	ILLINOIS	FED. AID PROJECT

PLOT DATE = Thu Nov 13 11:32:03 2014

INLETS, SPECIAL, NO. 5

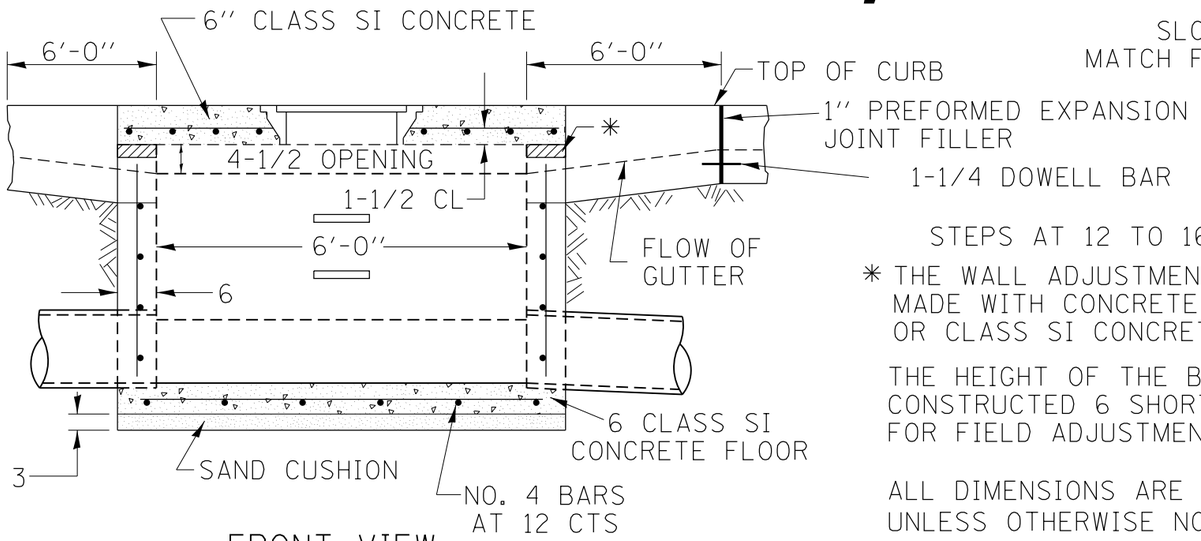

FRONT VIEW

STEPS AT 12 TO 16 CTS.

* THE WALL ADJUSTMENTS SHALL BE MADE WITH CONCRETE BUILDING BRICK OR CLASS SI CONCRETE.

THE HEIGHT OF THE BOX MAY BE CONSTRUCTED 6 SHORT TO ALLOW FOR FIELD ADJUSTMENTS.

ALL DIMENSIONS ARE IN INCHES UNLESS OTHERWISE NOTED.

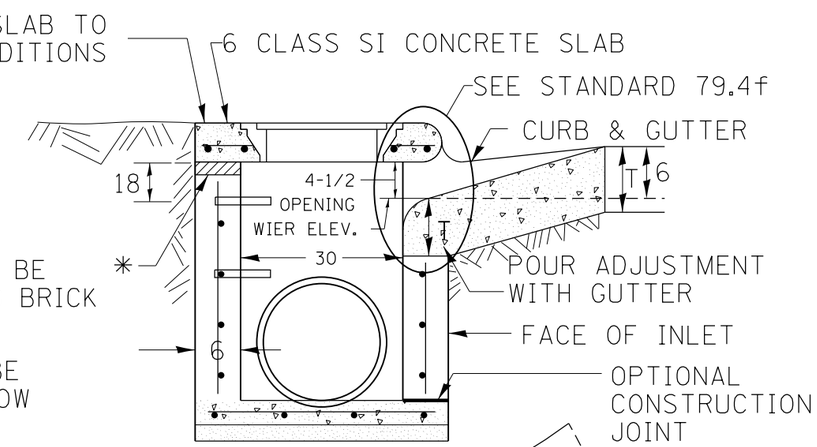

SEC. A-A

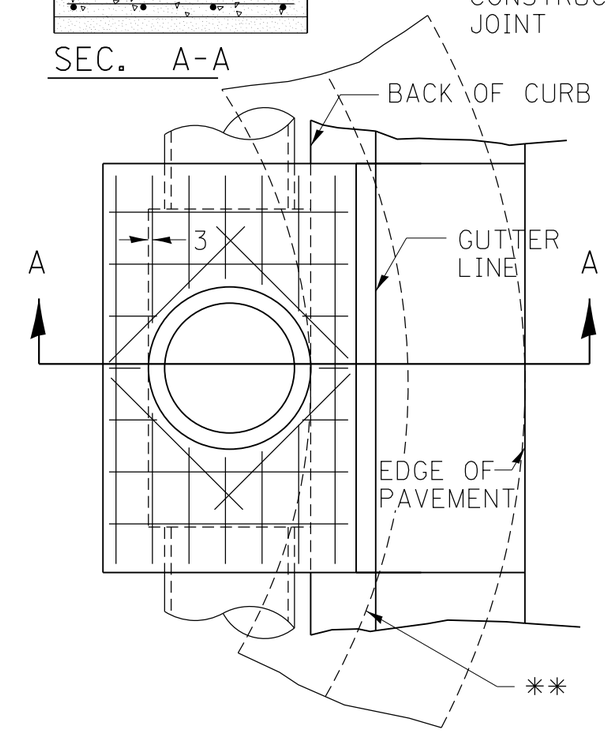

** WHEN INLET IS CONSTRUCTED IN RETURN, THE TOP OF SLAB SHALL CONFORM TO THE RADIUS OF THE RETURN.

NOTES

SEE STANDARD 602701 FOR DETAILS OF STEPS.

1'' PREFORMED EXPANSION JOINTS AS SHOWN SHALL BE PROVIDED ON EACH SIDE OF INLET.

CLASS SI CONCRETE OR PRECAST CONCRETE SHALL BE USED TROUGHOUT.

THE SIDE WALLS MAY BE BUILT AS PRECAST SEGMENTAL SECTIONS.

REINFORCEMENT FOR INLETS, SPECIAL, NO. 5 SHALL BE ACCORDING TO DISTRICT STANDARD 79.4g

STEPS SHALL BE OMITTED WHEN DEPTH OF INLET IS LESS THAN 5 FOOT

THE INLET SHALL BE CAST IN PLACE OR PRECAST.

EXCEPT AS NOTED HEREON INLETS, SPECIAL, NO. 5 SHALL BE CONSTRUCTED IN ACCORDANCE WITH SECTION 602 OF THE STANDARD SPECIFICATIONS.

THE CONTRACT UNIT PRICE EACH FOR INLET SPECIAL NO. 5 SHALL INCLUDE THE COST OF FURNISHING AND INSTALLING THE FRAME, LID, REINFORCEMENT BARS, FLOOR AND TOP SLABS, CAST IRON STEPS (IF USED).

THE CURB AND GUTTER WILL BE PAID FOR SEPARATELY AND WILL BE MEASURED THROUGH THE INLET.

THE CURB AND GUTTER ADJACENT TO AND 6 FOOT ON EITHER SIDE OF THE INLET SHALL BE CONSTRUCTED AS SHOWN WITH NO ADDITIONAL COMPENSATION FOR THE TRANSITION.

ALL PIPE UNDERDRAIN CONNECTIONS WHEN SPECIFIED SHALL BE DONE IN ACCORDANCE WITH ART. 601 OF THE STANDARD SPECIFICATIONS. THIS WORK WILL BE PAID FOR AT THE CONTRACT UNIT PRICE PER (FOOT) FOR PIPE UNDERDRAINS OR PIPE UNDERDRAINS (SPECIAL) OF THE DIAMETER SPECIFIED WHICH PRICE SHALL INCLUDE THE CA7 OR CA16 AND THE CONNECTION TO THE INLET.

LIGHT WEIGHT MANHOLE CASTING

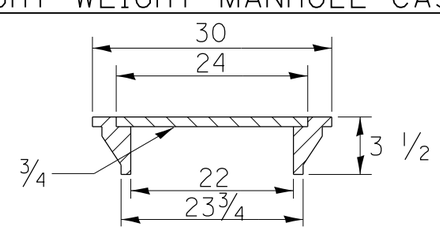

TOTAL WEIGHT 160 LBS.

REVISED - 8-27-13	REGION 2 / DISTRICT 2 STANDARD				F.A. RTE.	SECTION	COUNTY	TOTAL SHEETS / SHEET NO.
REVISED - 10-04-11								
REVISED -							CONTRACT NO.	
REVISED -	SCALE: 1.0000 '/ in.	SHEET NO.	OF	SHEETS	STA.	TO STA.	FED. ROAD DIST. NO. / ILLINOIS	FED. AID PROJECT

PLOT DATE = Thu Nov 13 11:32:04 2014

INLETS, SPECIAL, NO. 6

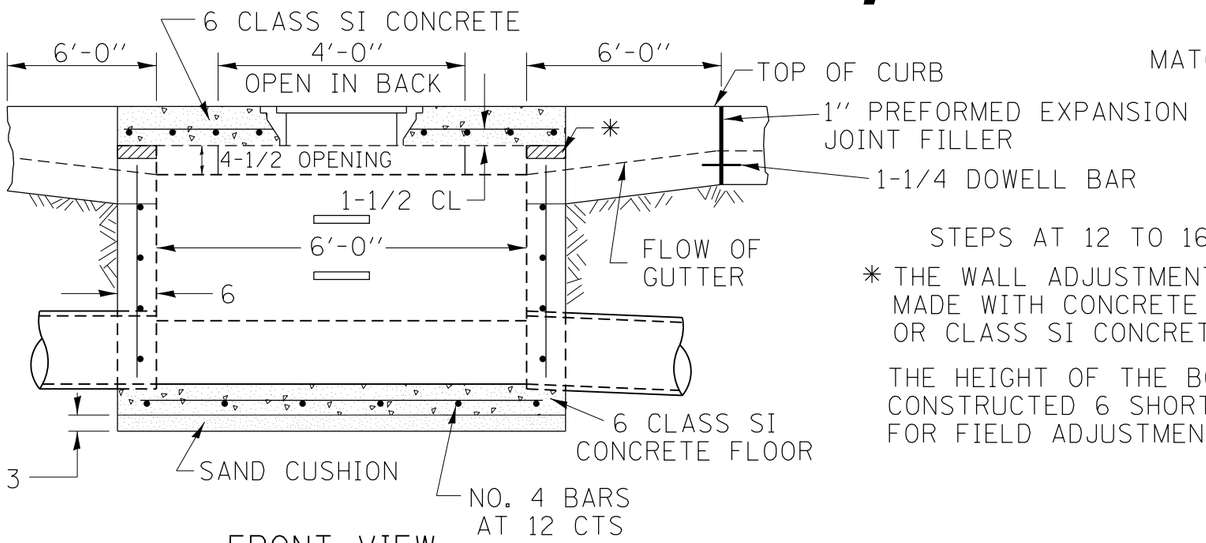

FRONT VIEW

STEPS AT 12 TO 16 CTS.

* THE WALL ADJUSTMENTS SHALL BE MADE WITH CONCRETE BUILDING BRICK OR CLASS SI CONCRETE.

THE HEIGHT OF THE BOX MAY BE CONSTRUCTED 6 SHORT TO ALLOW FOR FIELD ADJUSTMENTS.

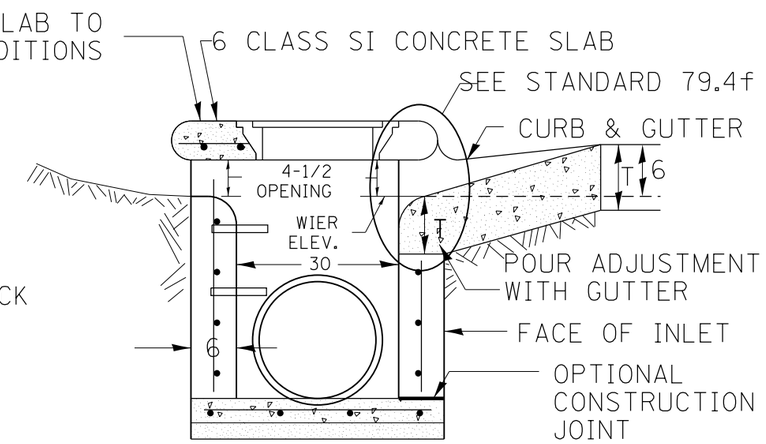

SEC. A-A

NOTES

SEE STANDARD 602701 FOR DETAILS OF STEPS.

1" PREFORMED EXPANSION JOINTS AS SHOWN SHALL BE PROVIDED ON EACH SIDE OF INLET.

CLASS SI CONCRETE OR PRECAST CONCRETE SHALL BE USED TROUGHOUT.

THE SIDE WALLS MAY BE BUILT AS PRECAST SEGMENTAL SECTIONS.

REINFORCEMENT FOR INLETS, SPECIAL, NO. 6 SHALL BE ACCORDING TO DISTRICT STANDARD 79.4g

STEPS SHALL BE OMITTED WHEN DEPTH OF INLET IS LESS THAN 5 FOOT

THE INLET SHALL BE CAST IN PLACE OR PRECAST.

EXCEPT AS NOTED HEREON INLETS, SPECIAL, NO. 6 SHALL BE CONSTRUCTED IN ACCORDANCE WITH SECTION 602 OF THE STANDARD SPECIFICATIONS.

THE CONTRACT UNIT PRICE EACH FOR INLET SPECIAL NO. 6 SHALL INCLUDE THE COST OF FURNISHING AND INSTALLING THE FRAME, LID, REINFORCEMENT BARS, FLOOR AND TOP SLABS, CAST IRON STEPS (IF USED).

THE CURB AND GUTTER WILL BE PAID FOR SEPARATELY AND WILL BE MEASURED THROUGH THE INLET.

THE CURB AND GUTTER ADJACENT TO AND 6 FOOT ON EITHER SIDE OF THE INLET SHALL BE CONSTRUCTED AS SHOWN WITH NO ADDITIONAL COMPENSATION FOR THE TRANSITION.

ALL PIPE UNDERDRAIN CONNECTIONS WHEN SPECIFIED SHALL BE DONE IN ACCORDANCE WITH ART. 601 OF THE STANDARD SPECIFICATIONS. THIS WORK WILL BE PAID FOR AT THE CONTRACT UNIT PRICE PER (FOOT) FOR PIPE UNDERDRAINS OR PIPE UNDERDRAINS (SPECIAL) OF THE DIAMETER SPECIFIED WHICH PRICE SHALL INCLUDE THE CA7 OR CA16 AND THE CONNECTION TO THE INLET.

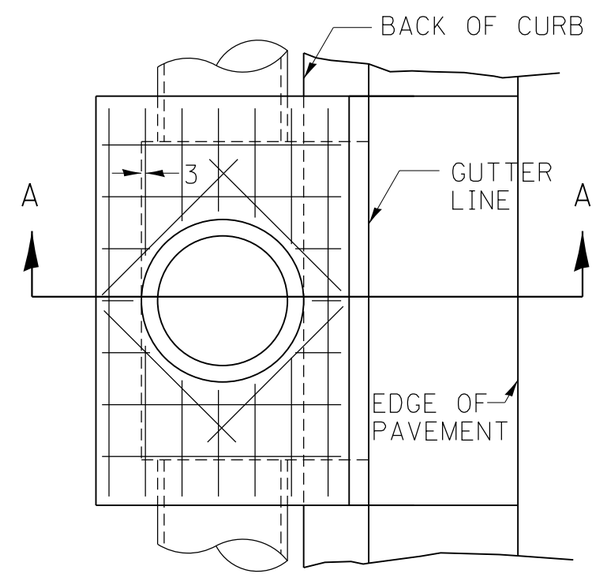

TOP VIEW

ALL DIMENSIONS ARE IN INCHES UNLESS OTHERWISE NOTED.

LIGHT WEIGHT MANHOLE CASTING

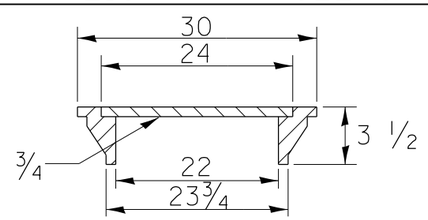

TOTAL WEIGHT 160 LBS.

REVISED - 8-27-13	REGION 2 / DISTRICT 2 STANDARD				F.A. RTE.	SECTION	COUNTY	TOTAL SHEETS	SHEET NO.
REVISED - 10-05-11									
REVISED -							CONTRACT NO.		
REVISED -	SCALE: 1.0000 ' / in.	SHEET NO.	OF	SHEETS	STA.	TO STA.	FED. ROAD DIST. NO.	ILLINOIS	FED. AID PROJECT

PLOT DATE = Thu Nov 13 11:32:04 2014

INLETS, SPECIAL, NO. 7

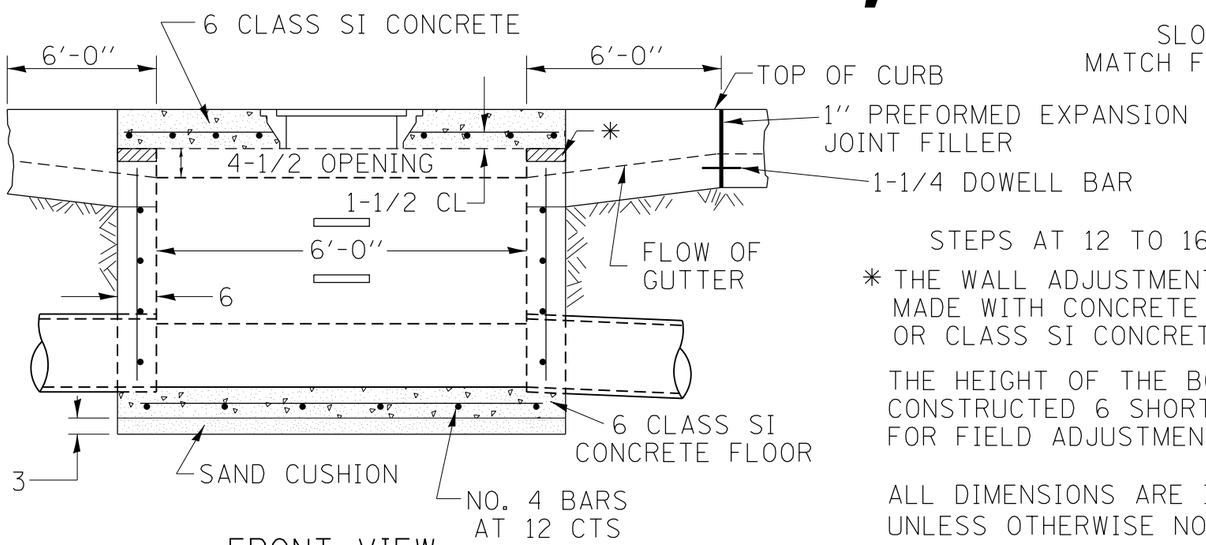

FRONT VIEW

STEPS AT 12 TO 16 CTS.

* THE WALL ADJUSTMENTS SHALL BE MADE WITH CONCRETE BUILDING BRICK OR CLASS SI CONCRETE.

THE HEIGHT OF THE BOX MAY BE CONSTRUCTED 6 SHORT TO ALLOW FOR FIELD ADJUSTMENTS.

ALL DIMENSIONS ARE IN INCHES UNLESS OTHERWISE NOTED.

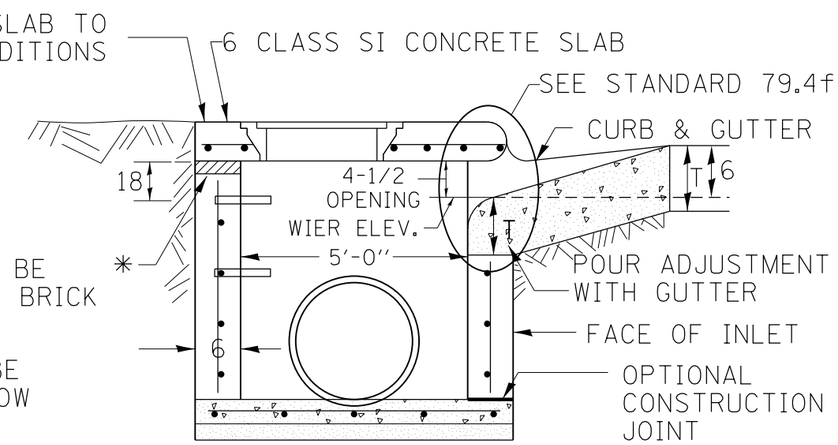

SEC. A-A

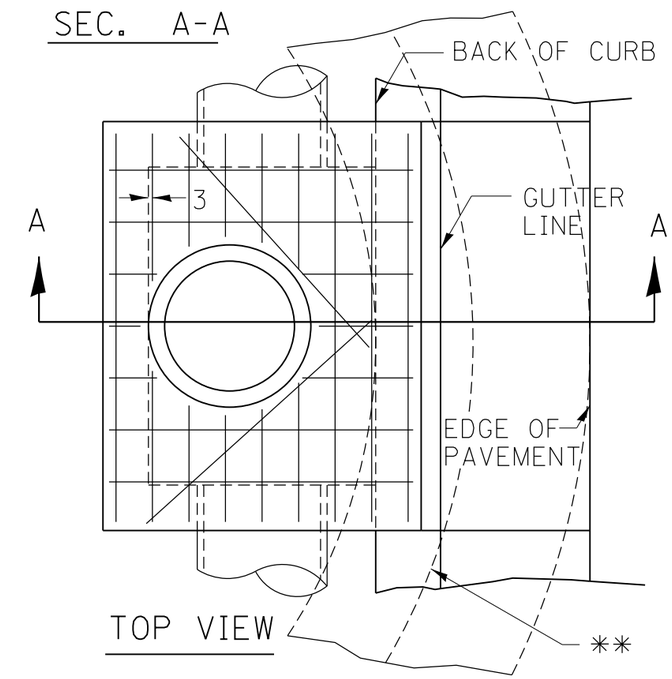

TOP VIEW

** WHEN INLET IS CONSTRUCTED IN RETURN, THE TOP OF SLAB SHALL CONFORM TO THE RADIUS OF THE RETURN.

NOTES

SEE STANDARD 602701 FOR DETAILS OF STEPS.

1" PREFORMED EXPANSION JOINTS AS SHOWN SHALL BE PROVIDED ON EACH SIDE OF INLET.

CLASS SI CONCRETE OR PRECAST CONCRETE SHALL BE USED TROUGHOUT.

THE SIDE WALLS MAY BE BUILT AS PRECAST SEGMENTAL SECTIONS.

REINFORCEMENT FOR INLETS, SPECIAL, NO. 7 SHALL BE ACCORDING TO DISTRICT STANDARD 79.4h

STEPS SHALL BE OMITTED WHEN DEPTH OF INLET IS LESS THAN 5 FOOT

THE INLET SHALL BE CAST IN PLACE OR PRECAST.

EXCEPT AS NOTED HEREON INLETS, SPECIAL, NO. 7 SHALL BE CONSTRUCTED IN ACCORDANCE WITH SECTION 602 OF THE STANDARD SPECIFICATIONS.

THE CONTRACT UNIT PRICE EACH FOR INLET SPECIAL NO. 7 SHALL INCLUDE THE COST OF FURNISHING AND INSTALLING THE FRAME, LID, REINFORCEMENT BARS, FLOOR AND TOP SLABS, CAST IRON STEPS (IF USED).

THE CURB AND GUTTER WILL BE PAID FOR SEPARATELY AND WILL BE MEASURED THROUGH THE INLET.

THE CURB AND GUTTER ADJACENT TO AND 6 FOOT ON EITHER SIDE OF THE INLET SHALL BE CONSTRUCTED AS SHOWN WITH NO ADDITIONAL COMPENSATION FOR THE TRANSITION.

ALL PIPE UNDERDRAIN CONNECTIONS WHEN SPECIFIED SHALL BE DONE IN ACCORDANCE WITH ART. 601 OF THE STANDARD SPECIFICATIONS. THIS WORK WILL BE PAID FOR AT THE CONTRACT UNIT PRICE PER (FOOT) FOR PIPE UNDERDRAINS OR PIPE UNDERDRAINS (SPECIAL) OF THE DIAMETER SPECIFIED WHICH PRICE SHALL INCLUDE THE CA7 OR CA16 AND THE CONNECTION TO THE INLET.

LIGHT WEIGHT MANHOLE CASTING

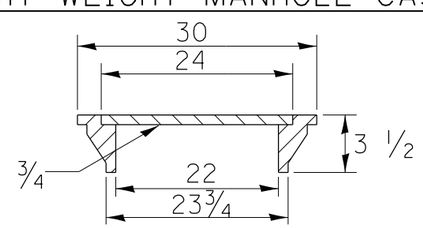

TOTAL WEIGHT 160 LBS.

REVISED - 8-27-12	REGION 2 / DISTRICT 2 STANDARD				F.A. RTE.	SECTION	COUNTY	TOTAL SHEETS / SHEET NO.
REVISED - 10-05-11								
REVISED -							CONTRACT NO.	
REVISED -	SCALE: 1.0000 ' / in.	SHEET NO.	OF	SHEETS	STA.	TO STA.	FED. ROAD DIST. NO. / ILLINOIS	FED. AID PROJECT

PLOT DATE = Thu Nov 13 11:32:05 2014

INLETS, SPECIAL, NO. 8

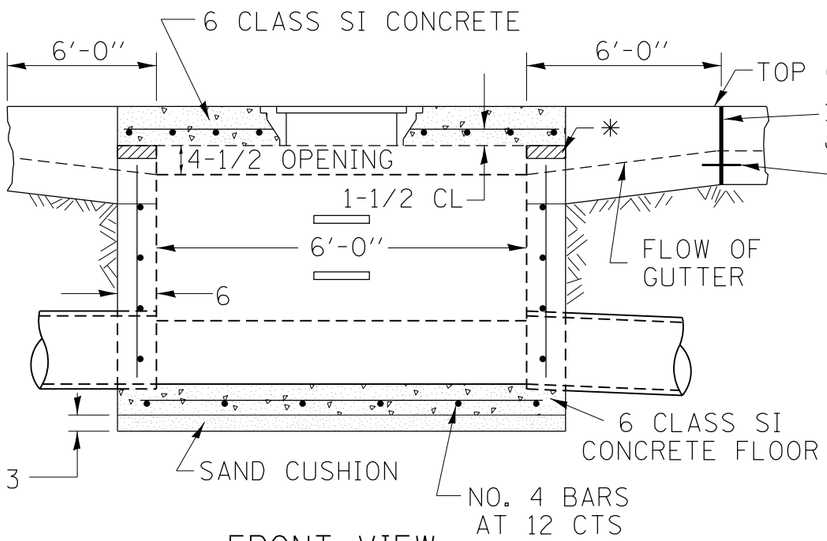

FRONT VIEW

STEPS AT 12 TO 16 CTS.

* THE WALL ADJUSTMENTS SHALL BE MADE WITH CONCRETE BUILDING BRICK OR CLASS SI CONCRETE.

THE HEIGHT OF THE BOX MAY BE CONSTRUCTED 6 SHORT TO ALLOW FOR FIELD ADJUSTMENTS.

ALL DIMENSIONS ARE IN INCHES UNLESS OTHERWISE NOTED.

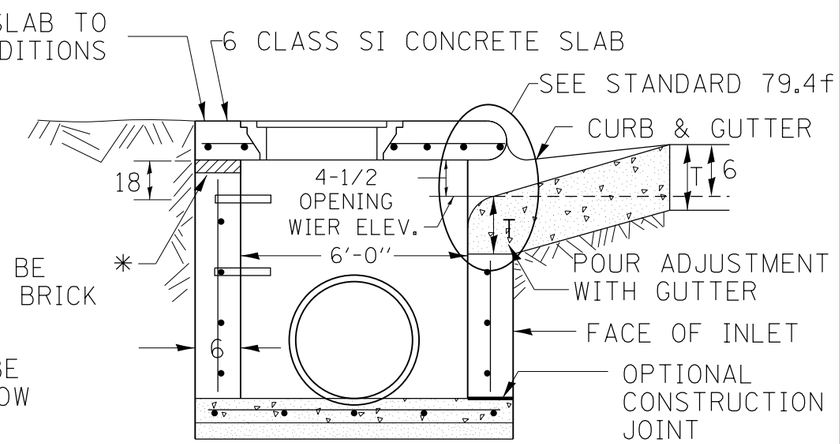

SEC. A-A

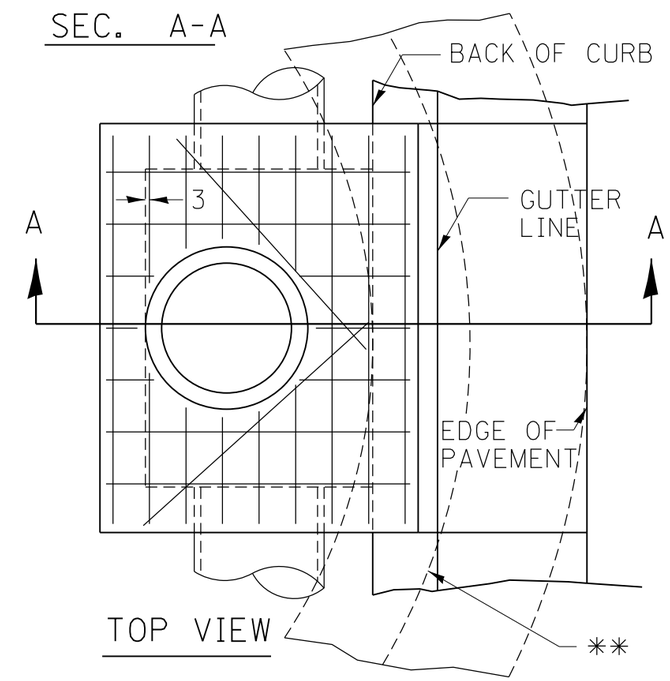

TOP VIEW

** WHEN INLET IS CONSTRUCTED IN RETURN, THE TOP OF SLAB SHALL CONFORM TO THE RADIUS OF THE RETURN.

NOTES

SEE STANDARD 602701 FOR DETAILS OF STEPS.

1" PREFORMED EXPANSION JOINTS AS SHOWN SHALL BE PROVIDED ON EACH SIDE OF INLET.

CLASS SI CONCRETE OR PRECAST CONCRETE SHALL BE USED TROUGHOUT.

THE SIDE WALLS MAY BE BUILT AS PRECAST SEGMENTAL SECTIONS.

REINFORCEMENT FOR INLETS, SPECIAL, NO. 8 SHALL BE ACCORDING TO DISTRICT STANDARD 79.4h

STEPS SHALL BE OMITTED WHEN DEPTH OF INLET IS LESS THAN 5 FOOT

THE INLET SHALL BE CAST IN PLACE OR PRECAST.

EXCEPT AS NOTED HEREON INLETS, SPECIAL, NO. 8 SHALL BE CONSTRUCTED IN ACCORDANCE WITH SECTION 602 OF THE STANDARD SPECIFICATIONS.

THE CONTRACT UNIT PRICE EACH FOR INLET SPECIAL NO. 8 SHALL INCLUDE THE COST OF FURNISHING AND INSTALLING THE FRAME, LID, REINFORCEMENT BARS, FLOOR AND TOP SLABS, CAST IRON STEPS (IF USED).

THE CURB AND GUTTER WILL BE PAID FOR SEPARATELY AND WILL BE MEASURED THROUGH THE INLET.

THE CURB AND GUTTER ADJACENT TO AND 6 FOOT ON EITHER SIDE OF THE INLET SHALL BE CONSTRUCTED AS SHOWN WITH NO ADDITIONAL COMPENSATION FOR THE TRANSITION.

ALL PIPE UNDERDRAIN CONNECTIONS WHEN SPECIFIED SHALL BE DONE IN ACCORDANCE WITH ART. 601 OF THE STANDARD SPECIFICATIONS. THIS WORK WILL BE PAID FOR AT THE CONTRACT UNIT PRICE PER (FOOT) FOR PIPE UNDERDRAINS OR PIPE UNDERDRAINS (SPECIAL) OF THE DIAMETER SPECIFIED WHICH PRICE SHALL INCLUDE THE CA7 OR CA16 AND THE CONNECTION TO THE INLET.

LIGHT WEIGHT MANHOLE CASTING

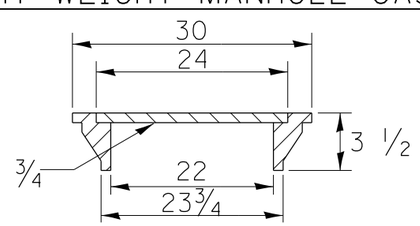

TOTAL WEIGHT 160 LBS.

REVISED - 8-27-13	REGION 2 / DISTRICT 2 STANDARD					F.A. RTE.	SECTION	COUNTY	TOTAL SHEETS / SHEET NO.
REVISED - 10-05-11									
REVISED -								CONTRACT NO.	
REVISED -	SCALE: 1.0000 ' / in.	SHEET NO.	OF	SHEETS	STA.	TO STA.	FED. ROAD DIST. NO.	ILLINOIS	FED. AID PROJECT

PLOT DATE = Thu Nov 13 11:32:06 2014

NOSE TYPE FOR INLET TOP SLAB

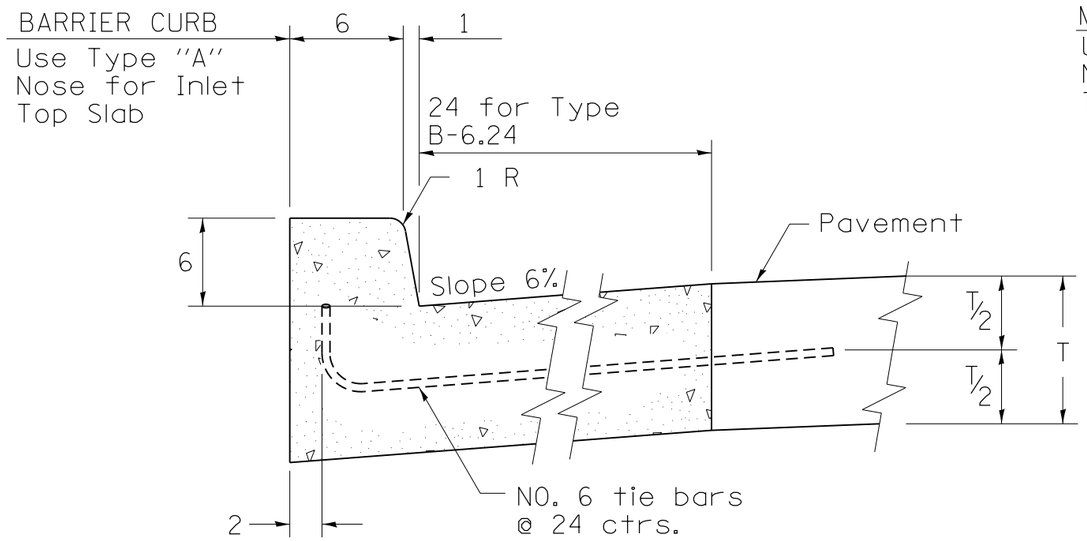

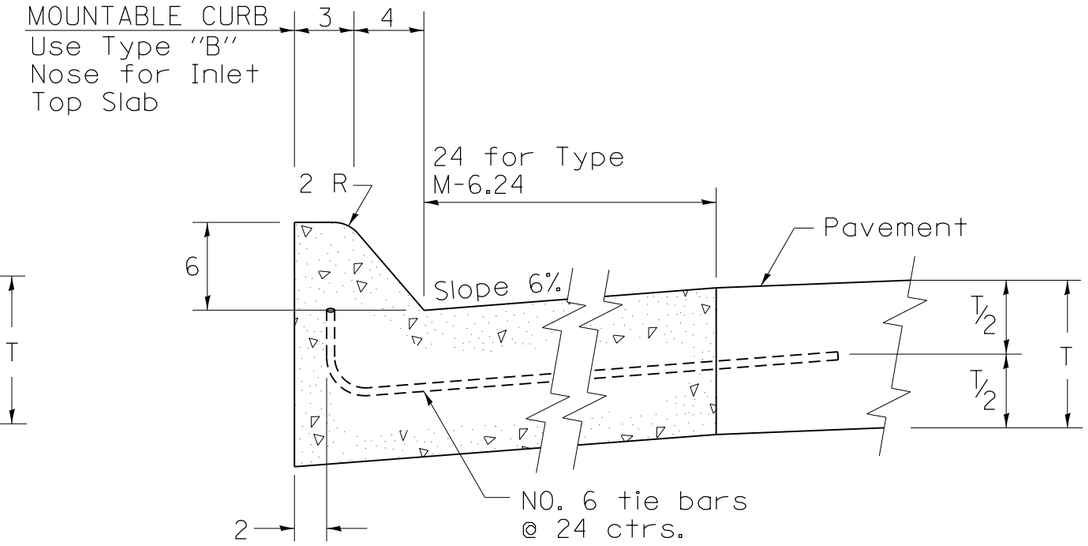

TYPE "A"

TO BE USED ON EXISTING OR PROPOSED
6 BARRIER CURB

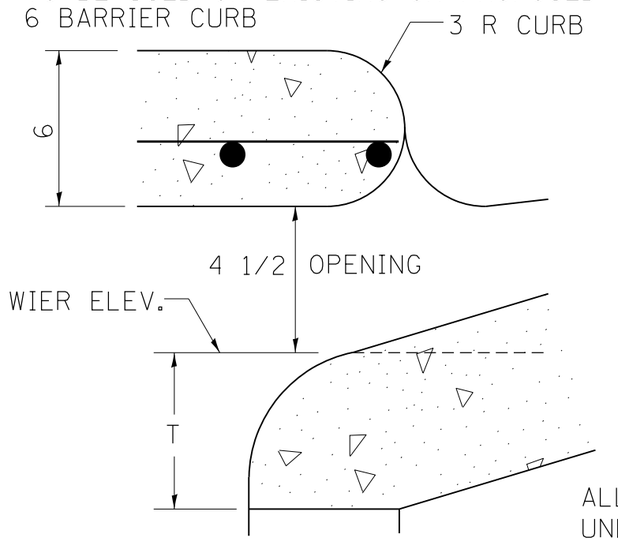

TYPE "B"

TO BE USED ON PROPOSED
6 MOUNTABLE CURB

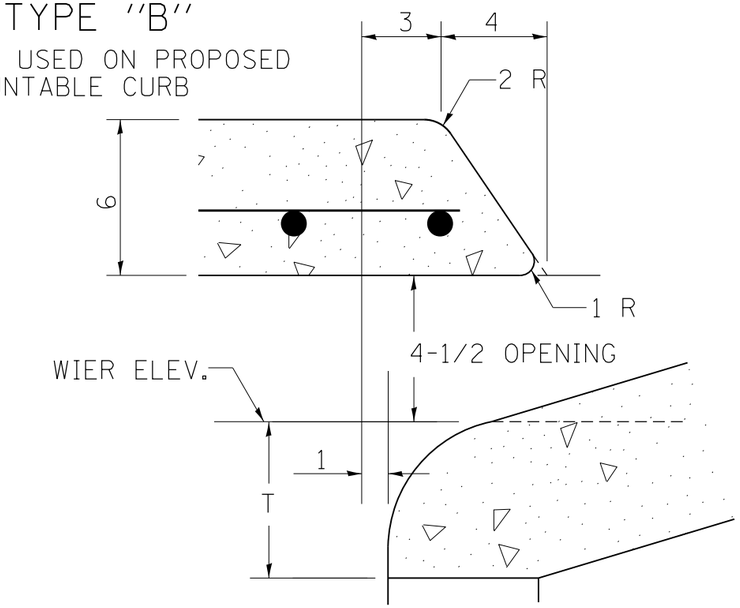

ALL DIMENSIONS ARE IN INCHES
UNLESS OTHERWISE NOTED.

PLOT DATE = Thu Nov 13 11:32:07 2014

REVISED - 10-05-11	REGION 2 / DISTRICT 2 STANDARD				F.A. RTE.	SECTION	COUNTY	TOTAL SHEETS	SHEET NO.
REVISED -									
REVISED -							CONTRACT NO.		
REVISED -	SCALE: 1.0000 ' / in.	SHEET NO. OF SHEETS	STA.	TO STA.	FED. ROAD DIST. NO.	ILLINOIS	FED. AID PROJECT		

INLETS, SPECIAL, NO. 3, 4, 5, 6 REINFORCEMENT DETAIL

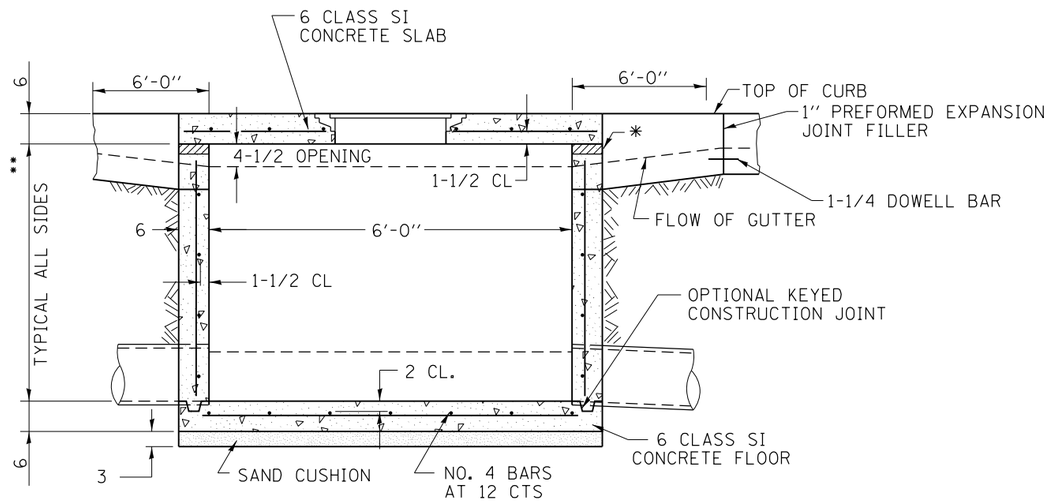

SEC. B-B

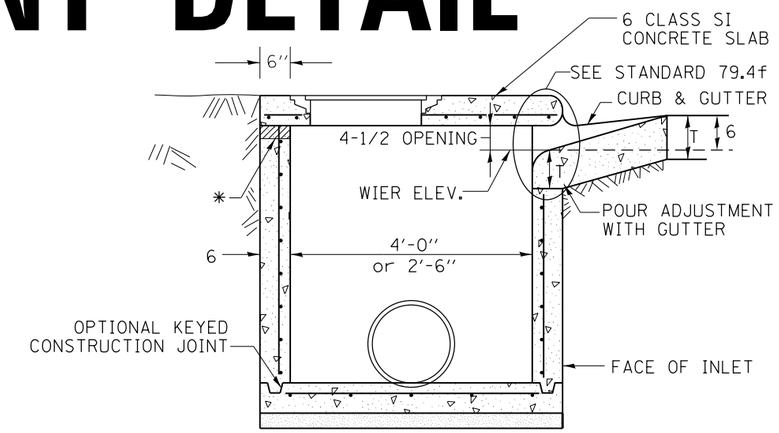

SEC. A-A

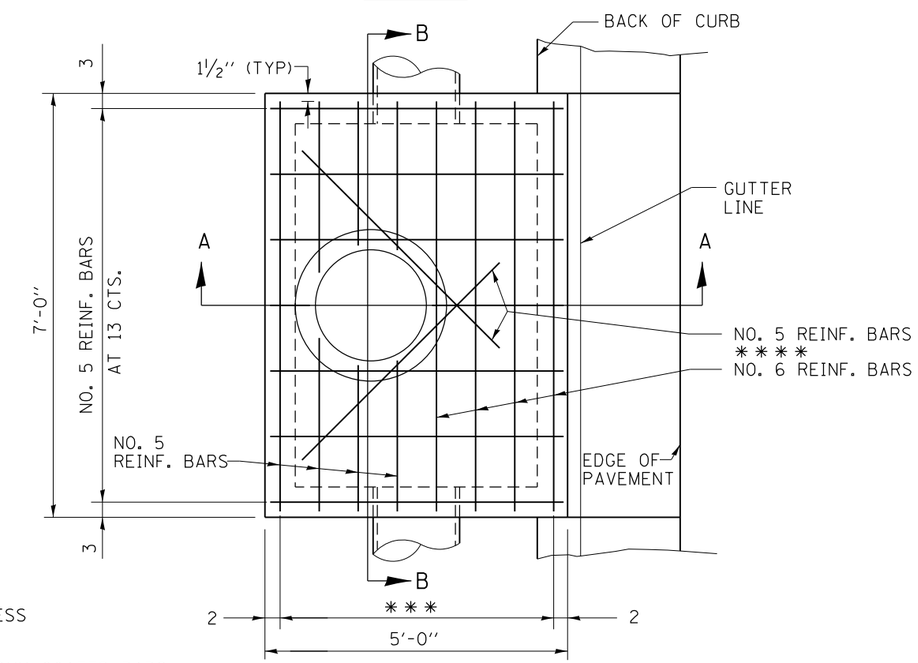

TOP VIEW

✱ THE WALL ADJUSTMENTS SHALL BE MADE WITH CONCRETE BUILDING BRICK OR CLASS SI CONCRETE.

THE HEIGHT OF THE BOX MAY BE CONSTRUCTED 6 SHORT TO ALLOW FOR FIELD ADJUSTMENTS.

✱✱ 4'-0" TO 8'-0" -
NO. 5 REINF. BARS AT 12 CTS. E.W.
8'-0" TO 13'-0" -
NO. 5 REINF. BARS AT 10 CTS. E.W.
13'-0" TO 15'-0" -
NO. 5 REINF. BARS AT 8 CTS. E.W.

✱✱✱ 7 SPA. AT 8" INLET SPECIAL # 3, 4
5 SPA AT 7-5/8" INLET SPECIAL # 5, 6
2 REBARS FOR INLET SPECIAL 3 & 4 @ 65"
✱✱✱✱ 4 REBARS FOR INELT SPECIAL 5 & 6 @ 24"

NOTES

ALL DIMENSIONS ARE IN INCHES UNLESS OTHERWISE NOTED.

TOP SLAB REINFORCEMENT TO BE EPOXY COATED BARS.

REVISED - 8-27-13	REGION 2 / DISTRICT 2 STANDARD			F.A. RTE.	SECTION	COUNTY	TOTAL SHEETS / SHEET NO.
REVISED - 10-05-11							
REVISED -						CONTRACT NO.	
REVISED -	SCALE: 1.0000 ' / in.	SHEET NO. OF SHEETS	STA. TO STA.	FED. ROAD DIST. NO.	ILLINOIS	FED. AID PROJECT	

PLOT DATE = Thu Nov 13 11:32:07 2014

INLETS, SPECIAL, NO. 7 & 8 REINFORCEMENT DETAIL

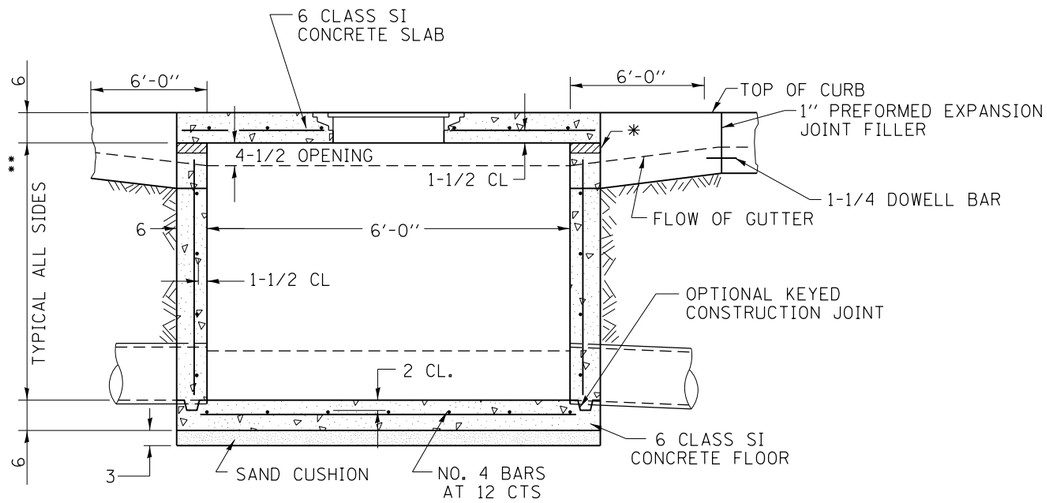

SEC. B-B

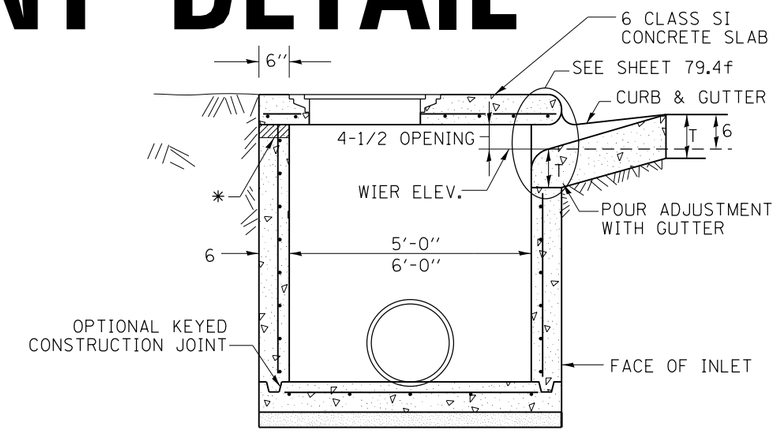

SEC. A-A

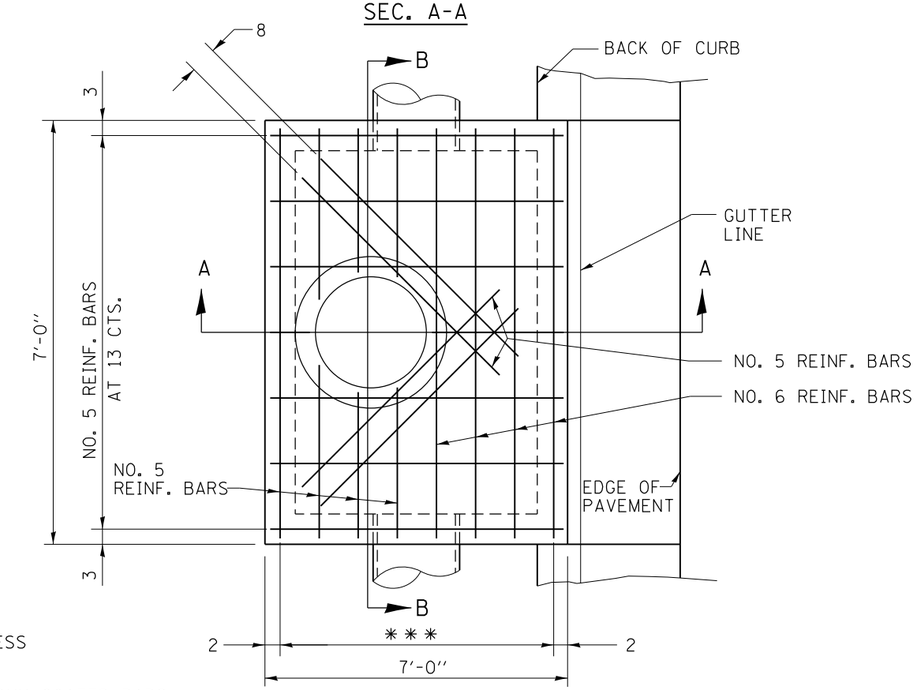

TOP VIEW

* THE WALL ADJUSTMENTS SHALL BE MADE WITH CONCRETE BUILDING BRICK OR CLASS SI CONCRETE. THE HEIGHT OF THE BOX MAY BE CONSTRUCTED 6 SHORT TO ALLOW FOR FIELD ADJUSTMENTS.
4'-0" TO 8'-0" -
NO. 5 REINF. BARS AT 12 CTS. E.W.
** 8'-0" TO 13'-0" -
NO. 5 REINF. BARS AT 10 CTS. E.W.
13'-0" TO 15'-0" -
NO. 5 REINF. BARS AT 8 CTS. E.W.
*** NO. 5 REINFORCEMENT BARS 10 SPA @ 8"

NOTES

ALL DIMENSIONS ARE IN INCHES UNLESS OTHERWISE NOTED.

TOP SLAB REINFORCEMENT TO BE EPOXY COATED BARS.

REVISED - 8-27-13	REGION 2 / DISTRICT 2 STANDARD			F.A. RTE.	SECTION	COUNTY	TOTAL SHEETS / SHEET NO.
REVISED - 10-05-11							
REVISED -						CONTRACT NO.	
REVISED -	SCALE: 1.0000 ' / in.	SHEET NO. OF SHEETS	STA. TO STA.	FED. ROAD DIST. NO.	ILLINOIS	FED. AID PROJECT	

PLOT DATE = Thu Nov 13 11:32:08 2014

INLETS TO BE RECONSTRUCTED WITH NEW STANDARD 542546 FRAME AND GRATE

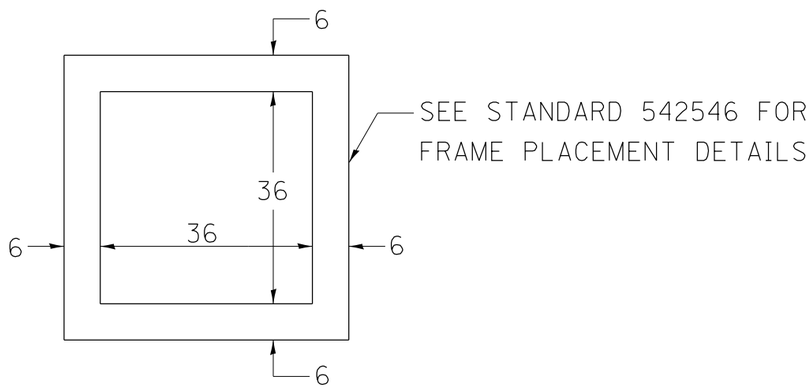

PLAN VIEW

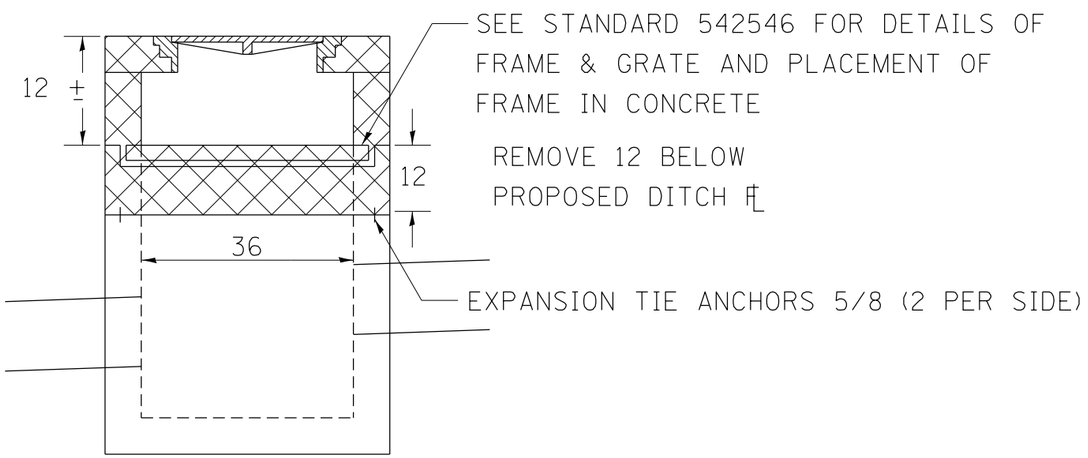

NOTES:

THIS WORK SHALL BE DONE IN ACCORDANCE WITH STANDARD 542546 AND THIS DETAIL.

CLASS SI CONCRETE SHALL BE USED THROUGHOUT. THE PROPOSED TOP CAN BE CAST IN PLACE OR PRECAST.

THE EXISTING FRAME & GRATE SHALL BE REMOVED AND DISPOSED OF BY THE CONTRACTOR.

THE CONCRETE SHALL BE REMOVED BY DRILLING, CHIPPING, SAWING, OR OTHER METHOD APPROVED OF BY THE ENGINEER.

THIS WORK SHALL BE PAID FOR AT THE CONTRACT UNIT PRICE EACH FOR INLETS TO BE RECONSTRUCTED WITH NEW STANDARD 542546 FRAME AND GRATE WHICH SHALL INCLUDE REMOVING THE FRAME & GRATE & CONCRETE, EXPANSION TIE ANCHORS, CLASS SI CONCRETE, AND FURNISHING & INSTALLING FRAME & GRATE (EITHER STEEL OR DUCTILE IRON).

ALL DIMENSIONS ARE IN INCHES UNLESS OTHERWISE NOTED.

PLOT DATE = Thu Nov 13 11:32:09 2014

REVISED - 10-05-11	REGION 2 / DISTRICT 2 STANDARD				F.A. RTE.	SECTION	COUNTY	TOTAL SHEETS	SHEET NO.
REVISED -									
REVISED -							CONTRACT NO.		
REVISED -	SCALE: 1.0000 ' / in.	SHEET NO. OF SHEETS	STA.	TO STA.	FED. ROAD DIST. NO.	ILLINOIS	FED. AID PROJECT		

GRATE, SPECIAL

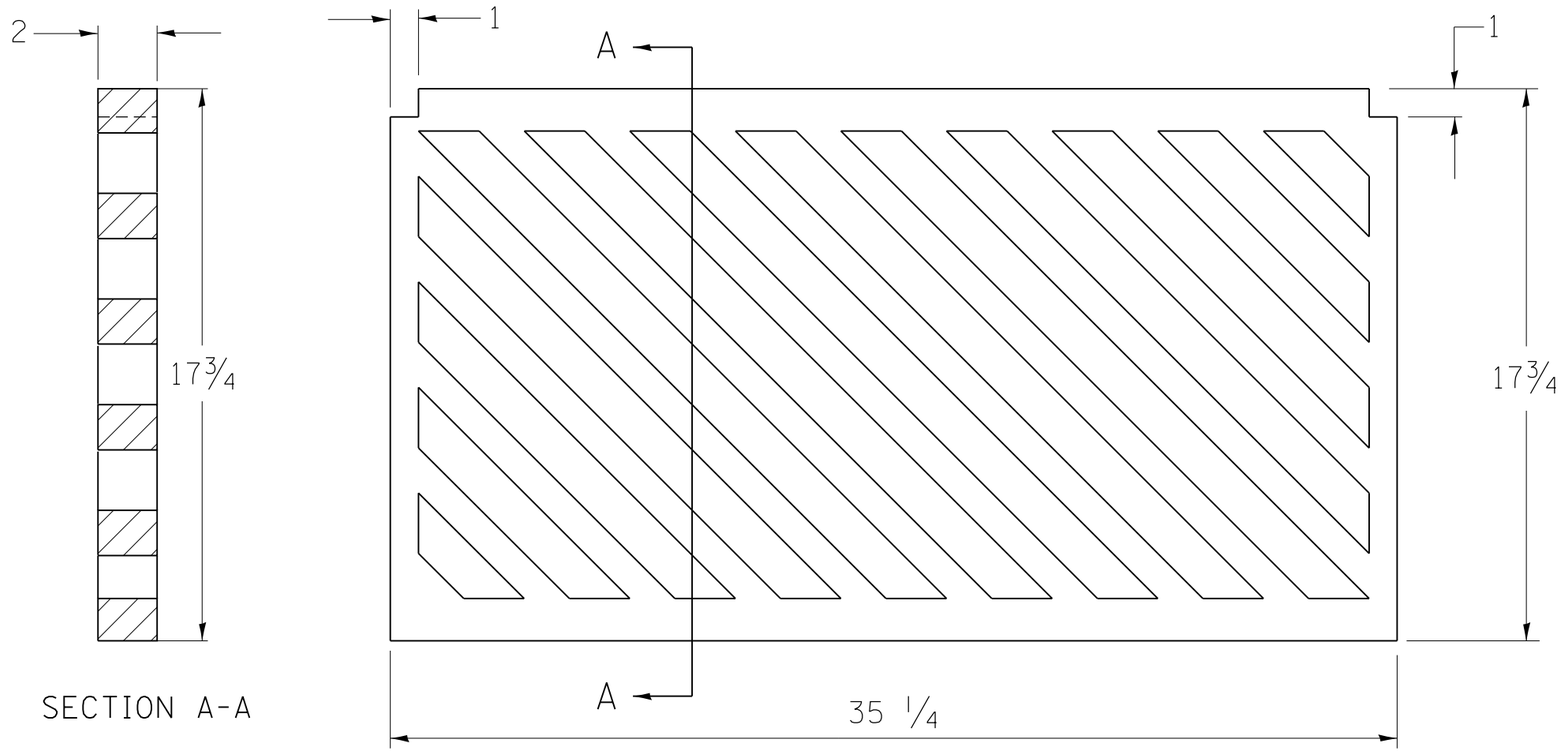

SECTION A-A

FLOW DIRECTION

ALL DIMENSIONS ARE IN INCHES UNLESS OTHERWISE NOTED.

PLAN VIEW OF CAST IRON GRATE

1-3/8 DIAGONAL BARS WITH
1-1/4 OPENINGS

NOTES

THE CONTRACTOR SHALL FIELD CHECK THE SIZE OF THE EXISTING GRATE BEFORE ORDERING THE NEW GRATE TO INSURE THE CORRECT SIZE.

THIS WORK SHALL BE PAID FOR AT THE CONTRACT UNIT PRICE PER EACH FOR SPECIAL GRATE NO. 1.

THE EXISTING GRATES ARE TO BE SALVAGED AND TO BECOME THE PROPERTY OF THE _____ .

REVISED - 10-05-11	REGION 2 / DISTRICT 2 STANDARD				F.A. RTE.	SECTION	COUNTY	TOTAL SHEETS	SHEET NO.
REVISED -									
REVISED -							CONTRACT NO.		
REVISED -	SCALE: 1.0000 ' / in.	SHEET NO.	OF	SHEETS	STA.	TO STA.	FED. ROAD DIST. NO.	ILLINOIS	FED. AID PROJECT

PLOT DATE = Thu Nov 13 11:32:09 2014

GRATE SPECIAL **83.4**

TYPICAL MEDIAN CROSSOVER CLOSURE
(WITH EMERGENCY OPENING)

GENERAL NOTES

WOOD POSTS, CABLE, AND SIGN SUPPORTS SHALL BE IN ACCORDANCE WITH SECTION 634 & 636 OF THE STANDARD SPECIFICATIONS FOR ROAD AND BRIDGE CONSTRUCTION.
THE PANELS SHALL BE ANCHORED TO THE 3/8 CABLE IN SUCH A MANNER SO THEY CANNOT SLIDE ALONG THE CABLE.

THE REFLECTIVE SHEETING USED FOR THE PANELS SHALL MEET THE REQUIREMENTS OF SECTION 1091 OF THE STANDARD SPECIFICATIONS FOR ROAD & BRIDGE CONSTRUCTION AND SHALL BE ON BOTH SIDES.

ALL PANELS SHALL HAVE ALTERNATING REFLECTORIZED WHITE & RED STRIPES SLOPING DOWNWARD AT 45° TOWARD THE SIDE ON WHICH TRAFFIC WILL PASS AND ON BOTH SIDES OF PANEL. THE DRILLING OF 3 AND 6'' HOLES SHALL BE INCIDENTAL TO THE MEDIAN CLOSURE.

THIS WORK SHALL BE PAID FOR AT THE CONTRACT UNIT PRICE EACH FOR MEDIAN CLOSURE.

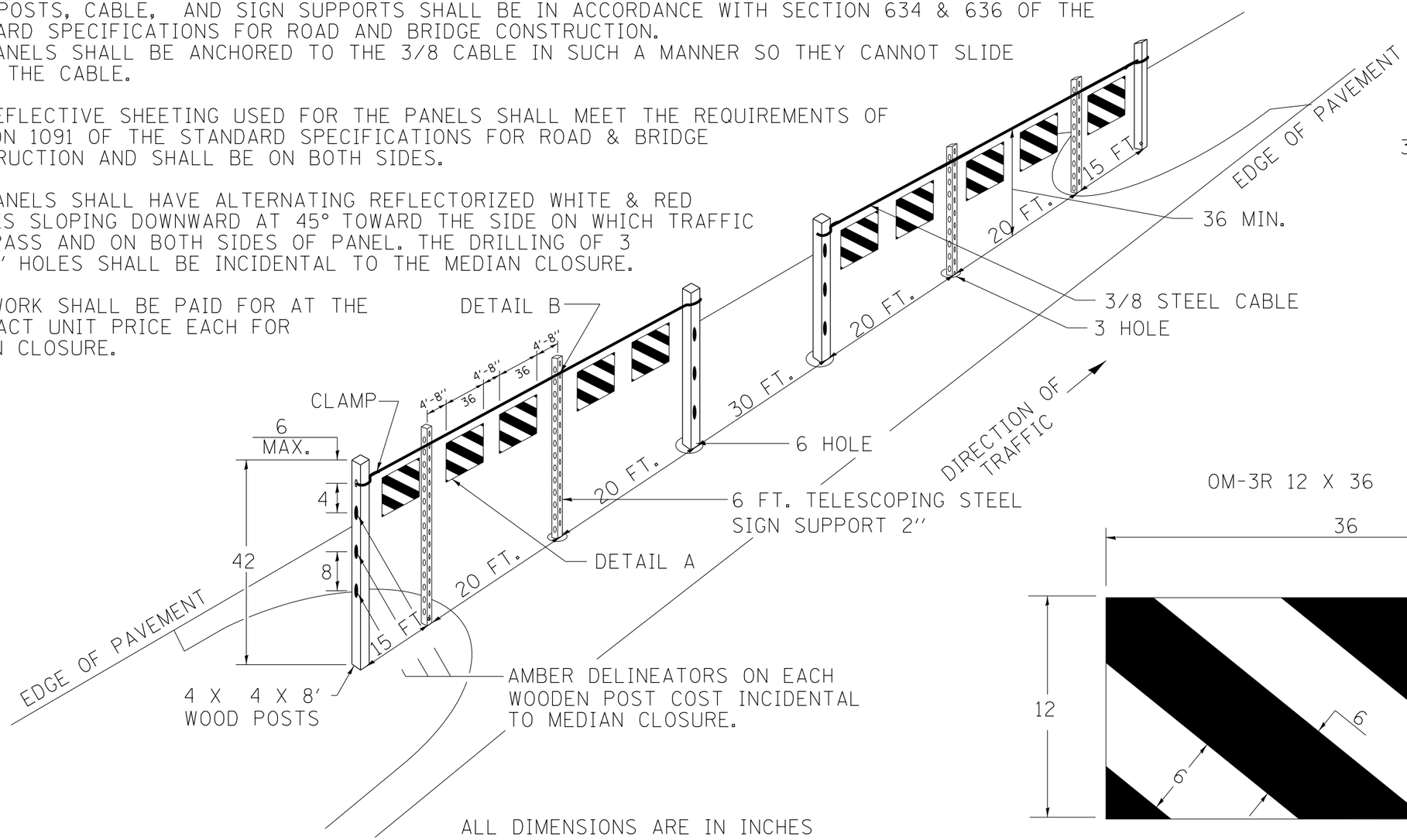

ALL DIMENSIONS ARE IN INCHES UNLESS OTHERWISE NOTED.

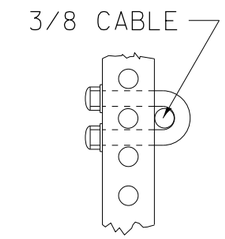

DETAIL B

OM-3R 12 X 36

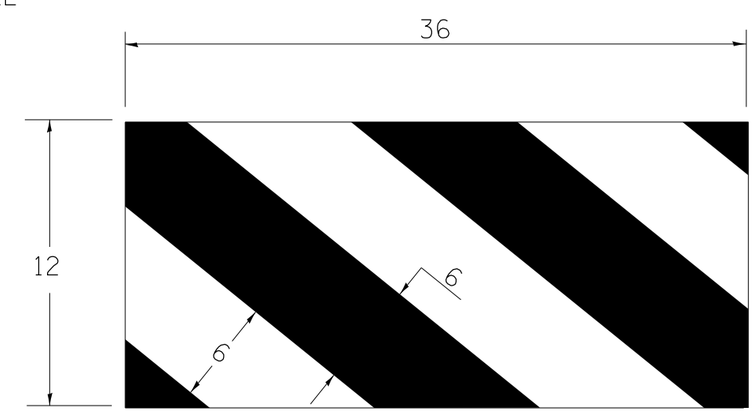

DETAIL A

REVISED - 1-17-12	REGION 2 / DISTRICT 2 STANDARD			F.A. RTE.	SECTION	COUNTY	TOTAL SHEETS / SHEET NO.
REVISED -							
REVISED -						CONTRACT NO.	
REVISED -	SCALE: 1.0000 '/ in.	SHEET NO. OF SHEETS	STA. TO STA.	FED. ROAD DIST. NO.	ILLINOIS	FED. AID PROJECT	

PLOT DATE = Thu Nov 13 11:32:10 2014

DRAIN FOR AGGREGATE BASES IN URBAN AREAS

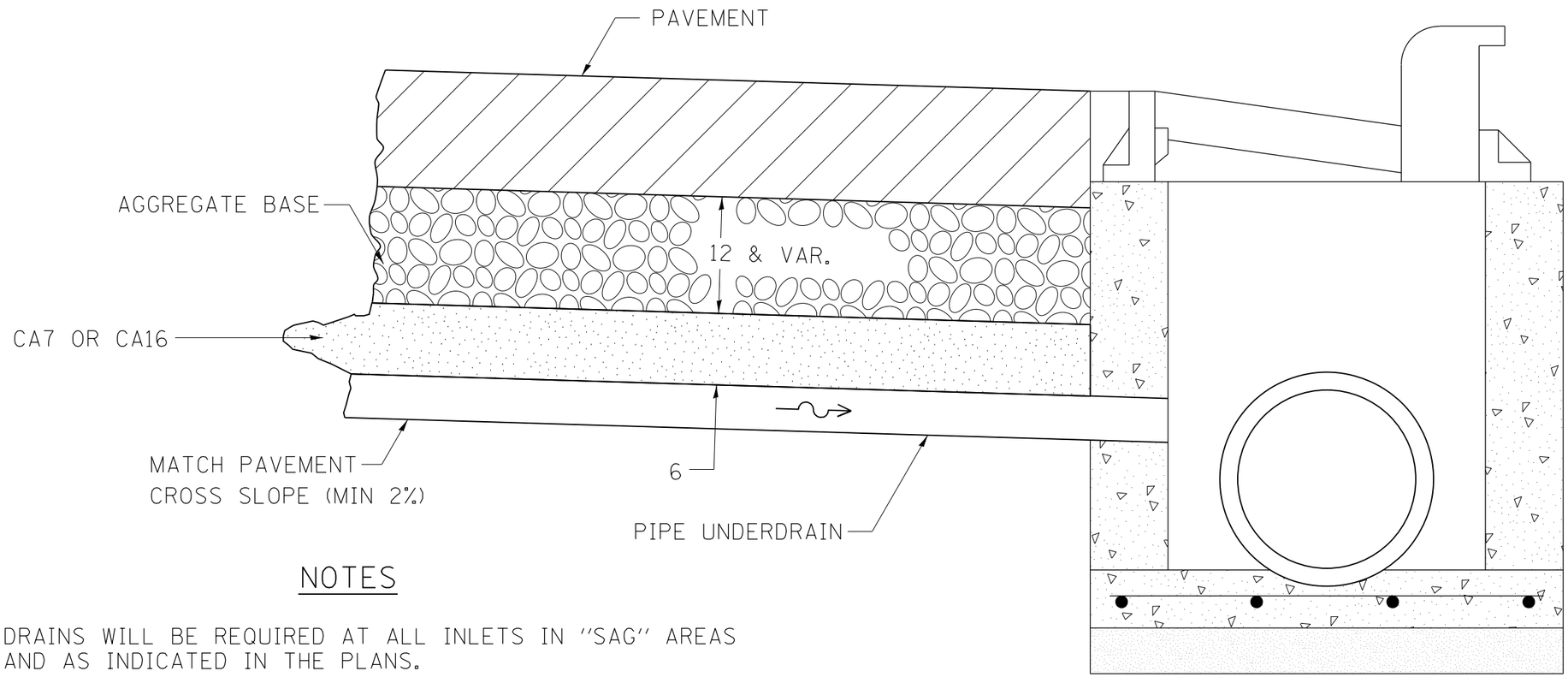

NOTES

DRAINS WILL BE REQUIRED AT ALL INLETS IN "SAG" AREAS AND AS INDICATED IN THE PLANS.

THIS WORK SHALL BE COMPLETED ACCORDING TO SECTION 601 OF THE STANDARD SPECIFICATIONS.

THIS WORK WILL BE PAID FOR AT THE CONTRACT UNIT PRICE PER FOOT FOR PIPE UNDERDRAINS OF THE DIAMETER SPECIFIED WHICH PRICE SHALL INCLUDE THE CA7 OR CA16 AND THE CONNECTION TO THE INLET.

ALL DIMENSIONS ARE IN INCHES UNLESS OTHERWISE NOTED.

PLOT DATE = Thu Nov 13 11:32:11 2014

REVISED - 10-05-11	REGION 2 / DISTRICT 2 STANDARD				F.A. RTE.	SECTION	COUNTY	TOTAL SHEETS	SHEET NO.
REVISED -									
REVISED -							CONTRACT NO.		
REVISED -	SCALE: 1.0000 ' / in.	SHEET NO. OF SHEETS	STA.	TO STA.	FED. ROAD DIST. NO.	ILLINOIS	FED. AID PROJECT		

RUMBLE RESURFACING

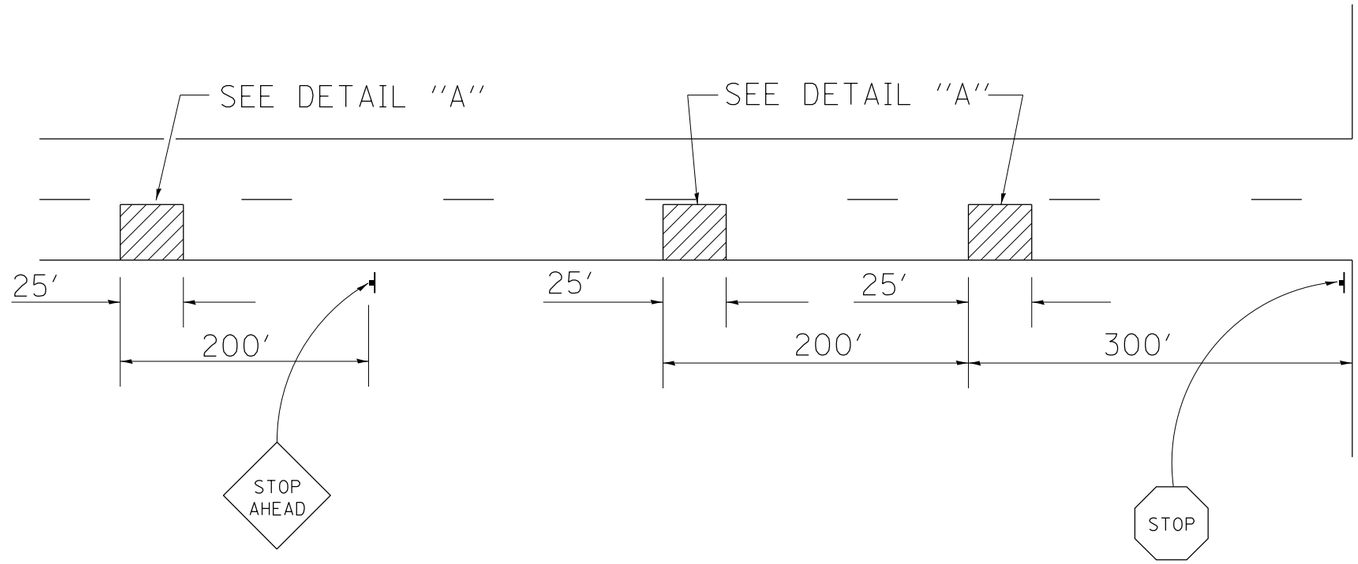

GROOVED

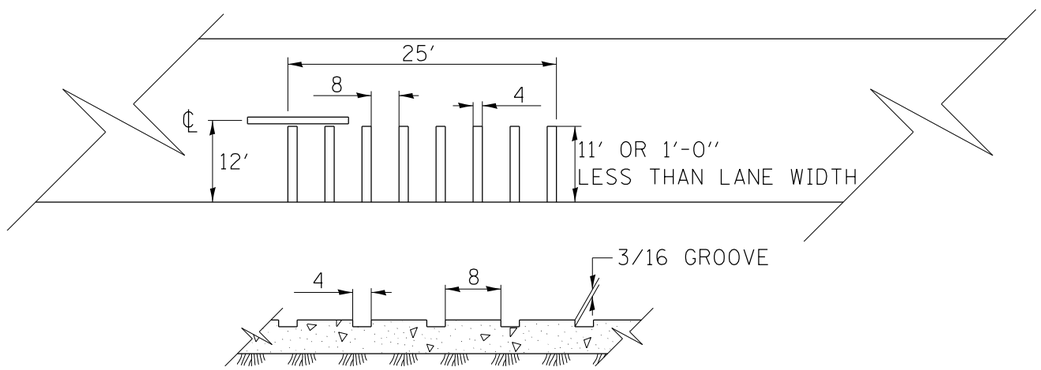

DETAIL "A"

NOTES

THE GROOVES SHALL BE CONSTRUCTED WITH A MILLING MACHINE CAPABLE OF COLD MILLING THE EXISTING SURFACE IN THE PATTERN SHOWN.

RUMBLE RESURFACING SHALL BE MEASURED FOR PAYMENT IN PLACE AND THE AREA COMPUTED IN SQUARE YARDS. THE LENGTH SHALL BE THE DISTANCE FROM OUTSIDE EDGE TO OUTSIDE EDGE OF THE GROOVE WHICH WILL BE APPROXIMATELY 25'. THE WIDTH SHALL BE 1' LESS THAN LANE WIDTH.

RUMBLE STRIPS SHALL BE CONSTRUCTED AS SHOWN AND PAID FOR PER SQUARE YARD AS RUMBLE RESURFACING.

ALL DIMENSIONS ARE IN INCHES UNLESS OTHERWISE NOTED.

PLOT DATE = Thu Nov 13 11:32:11 2014

REVISED - 10-05-11	REGION 2 / DISTRICT 2 STANDARD			F.A. RTE.	SECTION	COUNTY	TOTAL SHEETS	SHEET NO.
REVISED -								
REVISED -						CONTRACT NO.		
REVISED -	SCALE: 1.0000 ' / in.	SHEET NO. OF SHEETS	STA. TO STA.	FED. ROAD DIST. NO.	ILLINOIS	FED. AID PROJECT		

DRAIN FOR AGGREGATE BASE COURSE

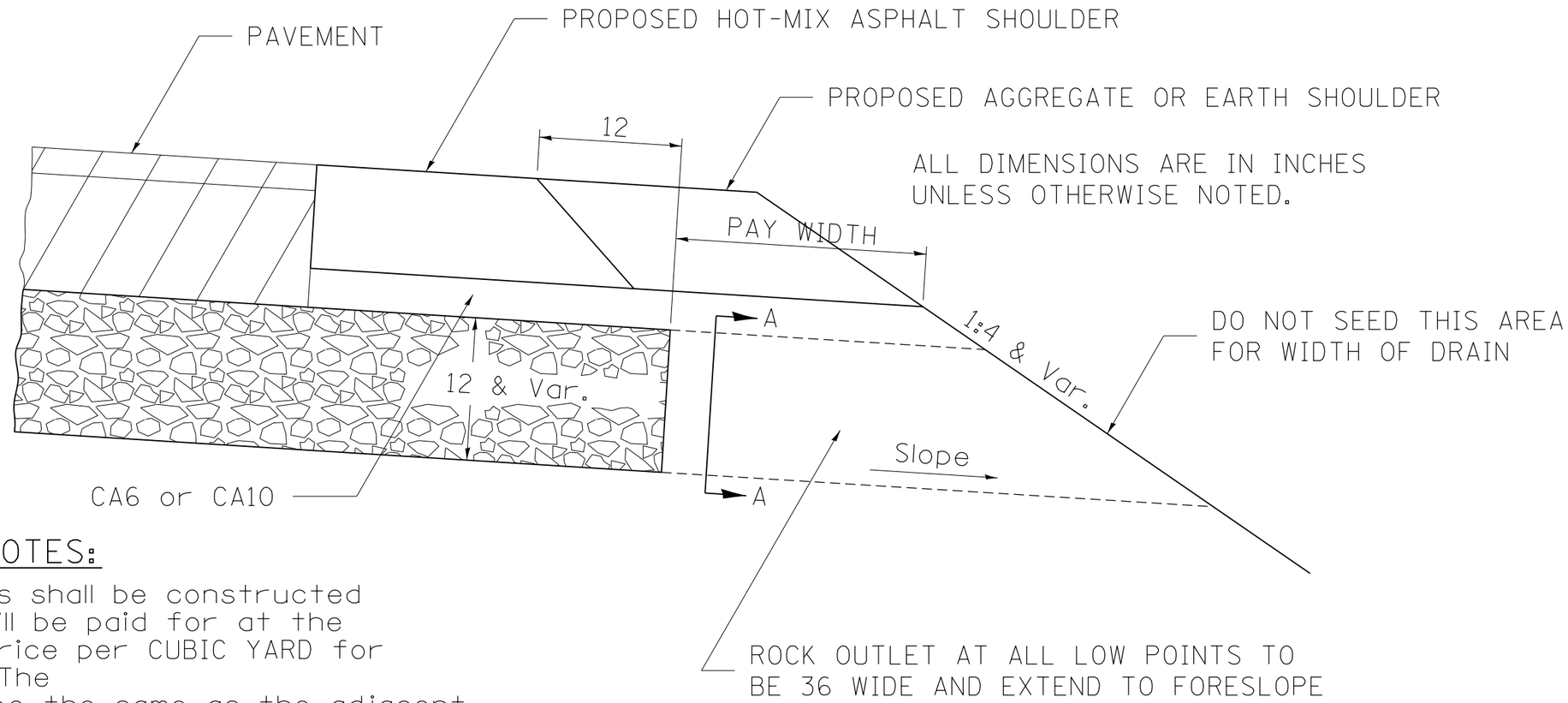

NOTES:

The rock outlets shall be constructed using CA7 and will be paid for at the contract unit price per CUBIC YARD for FRENCH DRAINS. The thickness shall be the same as the adjacent sub-base material as noted on the plans and shall include the cost of the filter fabric. The Rock outlets will be measured in CU YD , the width being 36 by the length shown above. The cost of the CA6 or CA10 under the shoulder shall be included in the contract unit price per SQ. YD. for AGGREGATE SUBGRADE IMPROVEMENT of the thickness specified. The fabric to be used shall conform to the Geotechnical Fabric For French Drains

SECTION A-A

NOTE: Slope same as shoulder with 2% min.

PLOT DATE = Thu Nov 13 11:32:12 2014

REVISED - 8-27-13	REGION 2 / DISTRICT 2 STANDARD				F.A. RTE.	SECTION	COUNTY	TOTAL SHEETS	SHEET NO.
REVISED - 10-09-12									
REVISED -							CONTRACT NO.		
REVISED -	SCALE: 1.0000 ' / in.	SHEET NO. OF SHEETS	STA.	TO STA.	FED. ROAD DIST. NO.	ILLINOIS	FED. AID PROJECT		

SUBGRADE REPLACEMENT

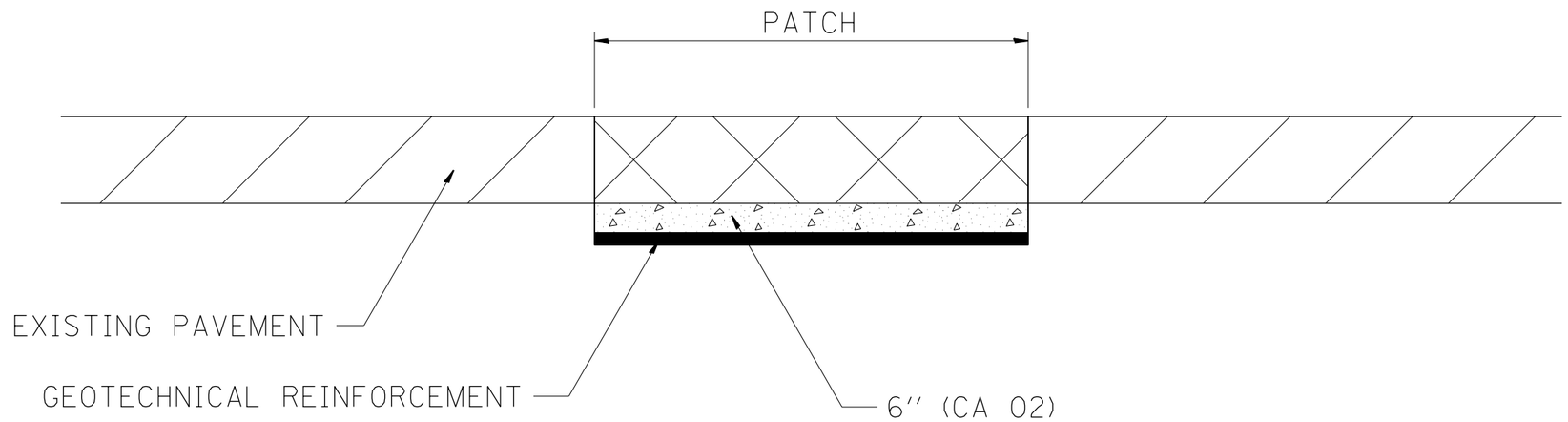

NOTES:

THE CA 02 SHALL BE COMPACTED IN A MANNER APPROVED BY THE ENGINEER. IF THE MOISTURE CONTENT OF THE MATERIAL IS SUCH THAT COMPACTION SATISFACTORY TO THE ENGINEER CANNOT BE OBTAINED, SUFFICIENT WATER SHALL BE ADDED SO THAT SATISFACTORY COMPACTION CAN BE OBTAINED.

THE CA 02 SHALL BE PAID FOR AT THE CONTRACT UNIT PRICE PER CU YD FOR AGGREGATE SUBGRADE IMPROVEMENT WHICH SHALL ALSO INCLUDE ALL EARTH EXCAVATION.

THE GEOTECHNICAL REINFORCEMENT WILL BE PAID FOR AT THE CONTRACT UNIT PRICE PER SQ YD FOR GEOTECHNICAL REINFORCEMENT.

ALL DIMENSIONS ARE IN INCHES UNLESS OTHERWISE NOTED.

PLOT DATE = Thu Nov 13 11:32:12 2014

REVISED - 3-13-13	REGION 2 / DISTRICT 2 STANDARD				F.A. RTE.	SECTION	COUNTY	TOTAL SHEETS	SHEET NO.
REVISED -									
REVISED -							CONTRACT NO.		
REVISED -	SCALE: 1.0000 '/ in.	SHEET NO. OF SHEETS	STA.	TO STA.	FED. ROAD DIST. NO.	ILLINOIS	FED. AID PROJECT		

TYPICAL MEDIAN CROSSOVER CLOSURE

GENERAL NOTES

WOOD POSTS, CABLE, AND SIGN SUPPORTS SHALL BE IN ACCORDANCE WITH SECTION 634 & 636 OF THE STANDARD SPECIFICATIONS FOR ROAD AND BRIDGE CONSTRUCTION.
THE PANELS SHALL BE ANCHORED TO THE 3/8 CABLE IN SUCH A MANNER SO THEY CANNOT SLIDE ALONG THE CABLE.

THE REFLECTIVE SHEETING USED FOR THE PANELS SHALL MEET THE REQUIREMENTS OF SECTION 1091 OF THE STANDARD SPECIFICATIONS FOR ROAD & BRIDGE CONSTRUCTION AND SHALL BE ON BOTH SIDES.

ALL PANELS SHALL HAVE ALTERNATING REFLECTORIZED WHITE & RED STRIPES SLOPING DOWNWARD AT 45° TOWARD THE SIDE ON WHICH TRAFFIC WILL PASS AND ON BOTH SIDES OF PANEL. THE DRILLING OF 3" HOLES SHALL BE INCLUDED TO THE MEDIAN CLOSURE.

THIS WORK SHALL BE PAID FOR AT THE CONTRACT UNIT PRICE EACH FOR MEDIAN CLOSURE.

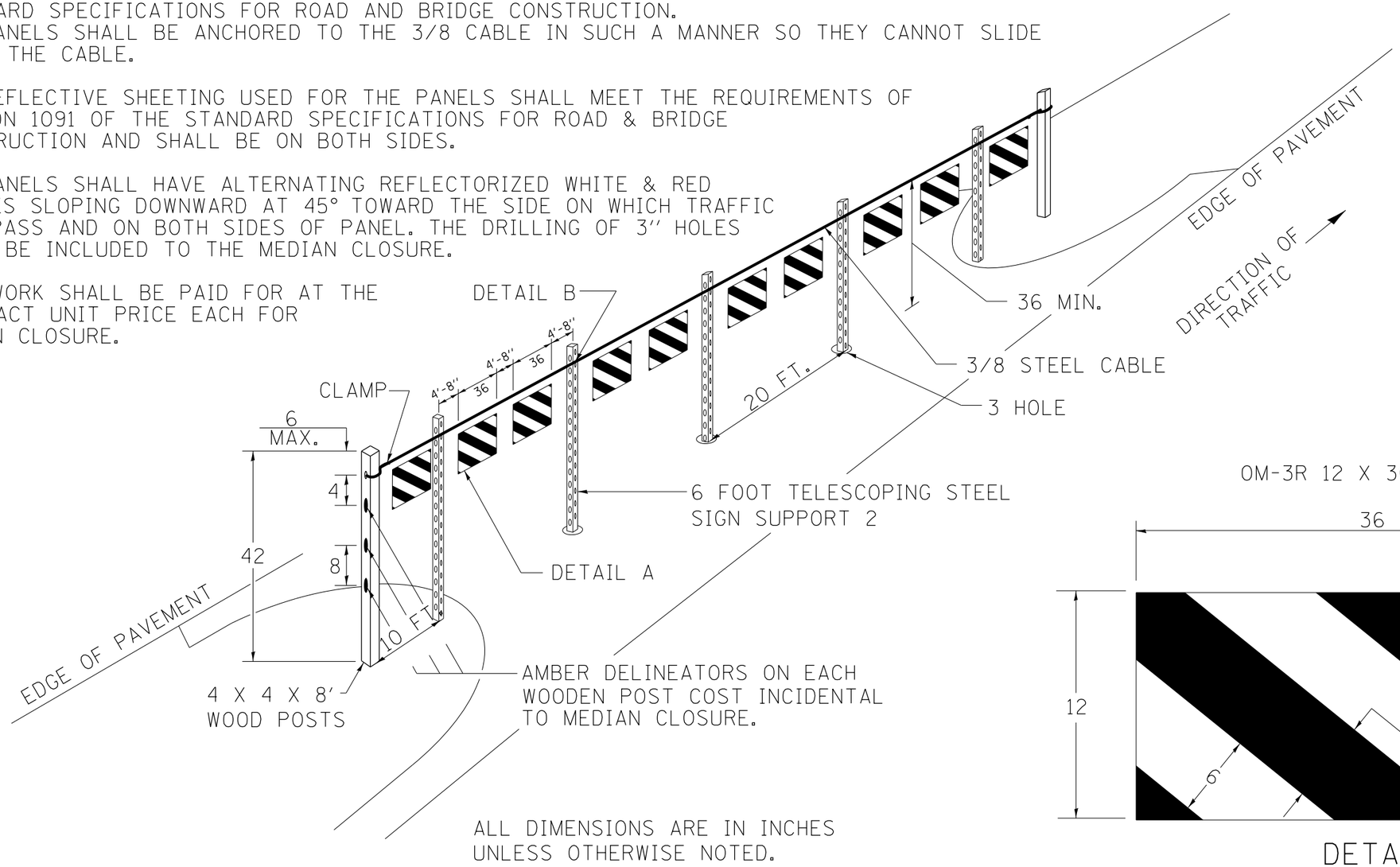

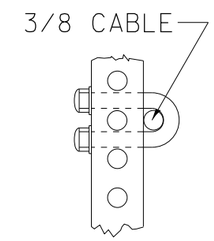

DETAIL B

OM-3R 12 X 36

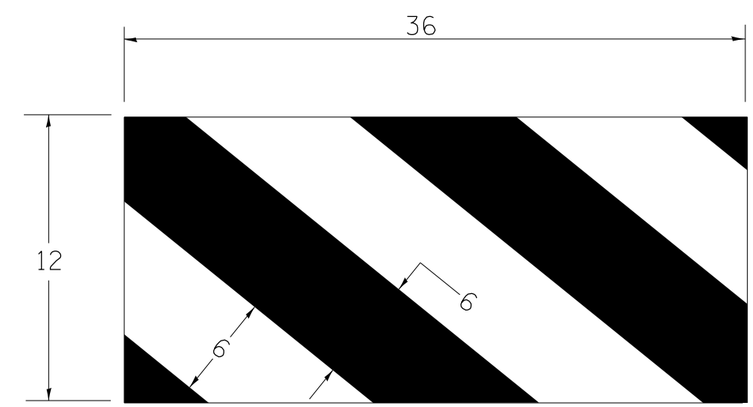

DETAIL A

ALL DIMENSIONS ARE IN INCHES UNLESS OTHERWISE NOTED.

REVISED - 1-16-12	**REGION 2 / DISTRICT 2 STANDARD**				F.A. RTE.	SECTION	COUNTY	TOTAL SHEETS	SHEET NO.
REVISED -									
REVISED -							CONTRACT NO.		
REVISED -	SCALE: 1.0000 ' / in.	SHEET NO.	OF	SHEETS	STA.	TO STA.	FED. ROAD DIST. NO.	ILLINOIS	FED. AID PROJECT

PLOT DATE = Thu Nov 13 11:32:13 2014

STOP LINE SIGN FOR TEMPORARY SIGNALS

SIZE: 24 x 24

4 CAPITAL LETTERS - BLACK

1/2 BORDER - BLACK

WHITE REFLECTIVE - TYPE AP
HIGH INTENSITY PRISMATIC SHEETING

GENERAL NOTE:

THIS SIGN SHALL BE INSTALLED AT THE STOP LINE AS DIRECTED BY ENGINEER.

ALL DIMENSIONS ARE IN INCHES UNLESS OTHERWISE NOTED.

PLOT DATE = Thu Nov 13 11:32:14 2014

REVISED - 10-11-11	REGION 2 / DISTRICT 2 STANDARD			F.A. RTE.	SECTION	COUNTY	TOTAL SHEETS	SHEET NO.
REVISED -								
REVISED -						CONTRACT NO.		
REVISED -	SCALE: 1.0000 ' / in.	SHEET NO. OF SHEETS	STA. TO STA.	FED. ROAD DIST. NO.	ILLINOIS	FED. AID PROJECT		