06-23-14

½ SIZE

10.2 Inlets, Special
11.2 Inlets, Special (Type A Gutter)
12.2 Double Inlet, Special
13.2 Frame & Grate for Inlets, Special
13.2a Frame & Grate for Inlets, Special
13.2b Frame & Grate for Inlets, Special
13.2c Frame & Grate for Inlets, Special
13.2d Frame & Grate for Inlets, Special
14.2 Inlets, Special, No. 1
15.2 Inlets, Special, No. 2
20.2 Standard Inlet for Type A Gutter (Special)
21.2 Standard Inlet for Curb & Gutter
30.2 Field Tile Junction Vaults 2’ and 3’ Dia.
31.2 Treatment of Field Tile Systems Under Ditches
32.2 Sign Panel - Type 1 (Special)
33.2 Special Drainage Outlet
34.2 Inlet Stand Pipe
35.2 Guardrail Erosion Control Treatments
36.2 Paved Ditch (Special)
37.2 Underdrain for Across Road (AR) Culverts
39.2 Informational Warning Sign (For Narrow Travel Lanes)
40.2 Stay in Your Lane Sign Detail
44.2 Reserved Parking Sign Detail
45.2 Superelevation Transition on Two-Lane Highway
46.2 Hot-Mix Asphalt Approaches and Mailbox Returns for Single Lift (SMART) Resurfacing Projects
47.2 Hot-Mix Asphalt Approaches and Mailbox Returns for Two Lifts (3P) Resurfacing Projects
48.2 Safety Edge (SMART Projects)
49.2 Safety Edge (3P Projects)
60.2 Curb Ramp Details
61.2 Slotted Drain Pipe for Type A Gutter (Special)
63.2 Pipe Handrail for Steps
64.2 Pipe Handrail, Special – for Retaining Walls
66.2 Permanent Survey Markers, Type II
73.2 Automatic Flap Gate
75.2 Entrance Sign for Use with Temporary Signals
81.2 Riprapped Culvert Energy Basin
88.2 Name Plate for Culverts
89.2 Termination of Dead End Roads
90.2 Mechanical Joints for Concrete Pipe and Box Culverts
91.2 Rough Grooved Surface Sign
93.2 Typical Aggregate Base Sideroad
94.2 Traffic Control & Protection at Turn Bays (To Remain Open to Traffic)

½ Size District 2 Standards

10.2	This is used for drainage in a curb & gutter section. The diagonal grate is included in the cost. The diagonal grate is bicycle safe. If the inlet is in a driveway which has a depressed curb, the grate on the bottom left hand side will be used. The cost of this grate is also included in the cost of the inlet special. When using this do not include 13.2, 13.2a, 13.2b, 13.2c or 13.2d.
11.2	This is used for drainage in a Type A gutter. The grate is included in the cost of the inlet.
12.2	This is used when extra inlet capacity is needed. For example, in a sag condition.
13.2 13.2a 13.2b 13.2c 13.2d	These are different types of frame & grates for inlet specials. One of these can be used to replace broken frame & grates on inlets to be adjusted or reconstructed. Select the one that matches the existing. All of them are bicycle safe.
14.2	This has been used in medians where the gutter flag is less than 24”.
15.2	This has been used in medians where the curb is only 2”± high. For example, near the nose of a ramped median.
20.2	Use this on the inlet end of Type A Gutter (Special)
21.2	Use this on the inlet end of Combination Concrete Curb & Gutter
30.2	If there is existing field tile on your job or think there could be field tile, include this standard. Also include a pay item for junction vaults.
31.2	If there is storm sewer or field tile under a ditch with 24” or less of cover, include this standard. Include the pay item for Miscellaneous Concrete.
32.2	Use this where the bridge is less than 24” wider than the roadway surface. This is very rare on a state route, but should be used on bridges on detour routes on County or Township roads.
33.2	This is a special drainage outlet to be used on existing pavements with drainage problems. The existing underdrains might not be working, or there is water pumping out of the joint between the pavement and shoulder.
34.2	This can be used to replace existing field tile stand pipes. The existing stand pipe is usually an orange perforated 6” pipe, 24” to 36” high, near the outlet end of a culvert. This could also be a new installation if requested by the property owner during Phase I or during negotiations.

35.2 This is an erosion control treatment at guardrail that Operations has used for years. The downside is the erosion control curb tends to further tilt the guardrail over time. This can be used to replace existing erosion control curb or at selected locations. A better treatment for slopes at guardrail is Perimeter Erosion Barrier, Special (Dist. Std. 8.4).

36.2 Paved ditch is rarely used in District 2. It tends to crack and water seeps under the concrete, causing it to be undermined. Once undermined it collapses, causing an erosion problem. Where it can be used is on very flat ditch grades, less than 0.2%. In this case, velocity is low, but the paved ditch could silt in. Operations could clean the paved ditch and the paved ditch establishes the grade line.

37.2 Include when installing across road culverts in sags or on grades greater than 2%. The purpose of this is to prevent water pumping out of the joints of the pavement patch. Add the pay items for Pipe Underdrains and Concrete Headwalls for Pipe Drains.

39.2 Use this in conjunction with the special provision Traffic Control for Narrow Travel Lanes which is under the Traffic Control Plan. Use this on one-lane stage construction jobs when the lane is less than 13’-6” measured from the toe of the barrier wall to the guardrail or bridge wall.

40.2 Use this when using District Standard 37.1 & 38.1.

44.2 This is to be used on all disabled parking stalls.

45.2 Include this on projects that correct existing superelevations, or on new pavements on superelevations. Not to be used on 3P or Smart projects because existing superelevations are not changed.

46.2 Include this on all Smart resurfacing projects.

47.2 Include this on all 3P resurfacing projects.

48.2 Include in Smart resurfacing projects with paved shoulders 3’ or less.

49.2 Include in 3P resurfacing projects with paved shoulders 3’ or less.

60.2 Include this in projects with new disabled ramps or if an existing ramp is modified.

61.2 This can be used to increase drainage in curb & gutter or Gutter, Type A (Special) where the longitudinal grade is less than 0.3%. Use 68.1 when constructing median crossovers.

63.2 Include this when constructing new steps.

64.2 Include this when handrails are needed on retaining walls. Not all retaining walls need handrails. Retaining walls that are supporting and adjacent to sidewalks or parking lots usually need a handrail. Landscaping walls to retain earth in front of a house usually don’t need handrails.

66.2 Include this when using the pay item for Permanent Survey Marks. Do not include Highway Standard 667101 because Standard 66.2 is 5' deep and requires a witness marker.

73.2 Use this on entrance pipes or berm pipes adjacent to a river or canal. This will prevent water from the river or canal backing up into the ditch.

75.2 Use this on low volume entrances that are between the traffic signals on Highway Standard 701316 or 701321.

81.2 This is one option to control erosion at the ends of culverts with very high velocities. There is a design process to determine the dimensions in the chart. Consult with the Hydraulics Engineer on its use.

88.2 Include this on all across road pipe culverts or multi-cell culverts with spans less than 20'. On bridges and multi-cell culverts with spans of 20' or more, use the Highway Standard 515001.

89.2 Include this at the end of dead end roads like a cul-de-sac or hammer head turn around.

90.2 Use this at locations where pipe culverts or box culvert joints could separate. Most culverts do not require the ties, so this is rarely used. One application is where the culvert outlets into a river. There could be erosion at the end of the culvert so the end section or sections of the culvert could tip or fall off. In this case, only the last one or two sections were tied.

91.2 Include this for any milling of the mainline pavement.

93.2 Include this when sideroads are constructed with 3"± of incidental on an aggregate base and the mainline has 8" HMA shoulders. This standard includes 4' HMA shoulders on the sideroad return, which will be placed monolithically when the return is resurfaced.

94.2 Include this on multi-lane roads when the traffic lane is closed adjacent to a <u>left</u> or <u>right</u> turn lane and the turn lane is to remain open to traffic.

INLETS, SPECIAL

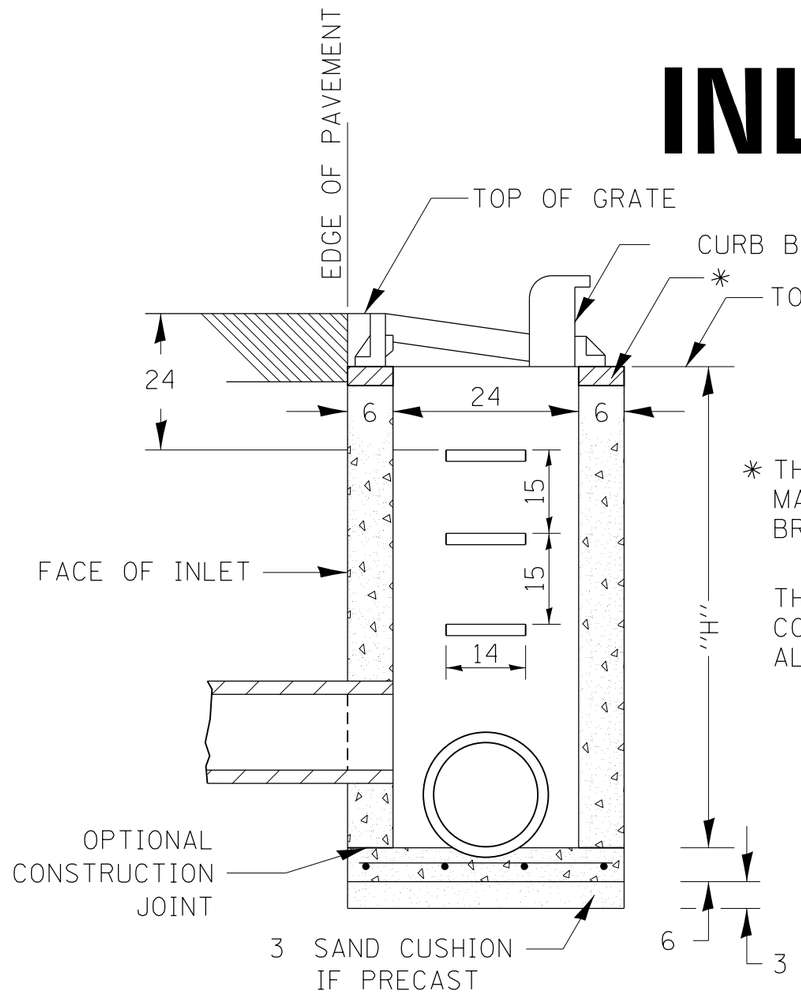

SEC. A-A

* THE WALL ADJUSTMENTS SHALL BE MADE WITH CONCRETE BUILDING BRICK OR CLASS SI CONCRETE.

THE HEIGHT OF THE BOX MAY BE CONSTRUCTED 6 SHORT TO ALLOW FOR FIELD ADJUSTMENTS.

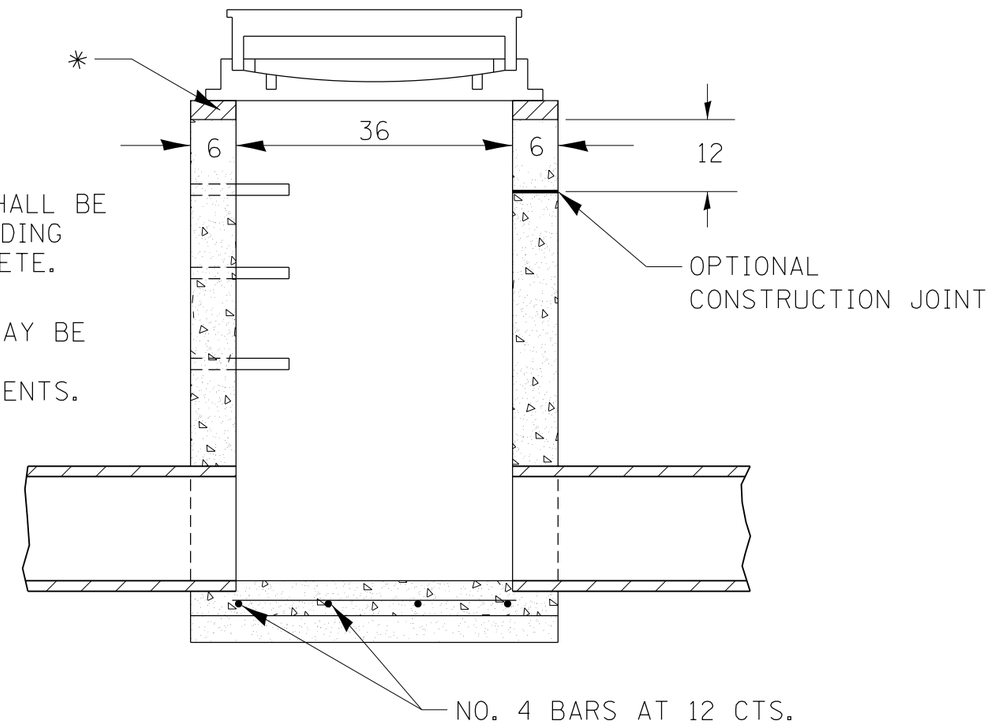

SEC. B-B

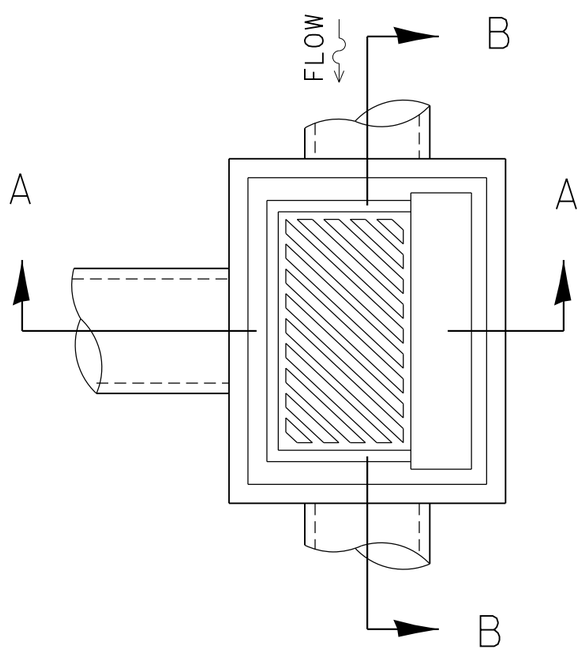

NOTES

SEE STANDARD 602701 FOR DETAILS OF STEPS.

EXCEPT AS NOTED HEREON INLET SPECIAL SHALL BE CONSTRUCTED IN ACCORDANCE WITH SECTION 602 OF THE STANDARD SPECIFICATIONS.

THE SIDE WALLS MAY BE BUILT AS PRECAST SEGMENTED SECTIONS.

ALL VOIDS AROUND PIPE ENTRANCE, BOTH INSIDE AND OUTSIDE, SHALL BE SEALED WITH MORTAR.

WEIGHT OF CAST IRON FRAME & GRATE = 530 lbs. ± .
STEPS SHALL BE OMITTED WHEN DEPTH OF "H" IS LESS THAN 5 ft.

DETAIL OF FRAME & GRATE

NOTES

CLASS SI CONCRETE OR PRECAST CONCRETE SHALL BE USED THROUGHOUT. PRECAST CONCRETE SHALL BE IN ACCORDANCE WITH SECTION 504.01 THRU 504.05 OF THE STANDARD SPECIFICATIONS EXCEPT THAT CONCRETE STRENGTH SHALL BE 4,000 psi AFTER 28 DAYS.

THE CONTRACT UNIT PRICE EACH FOR INLETS, SPECIAL SHALL INCLUDE THE COST OF CONSTRUCTING THE INLET BOX, FURNISHING AND INSTALLING THE FRAME AND GRATE, THE CAST IRON STEPS (IF USED), THE PRECAST FLOOR SLABS, SAND CUSHION (WHEN USED) AND REINFORCEMENT BARS.

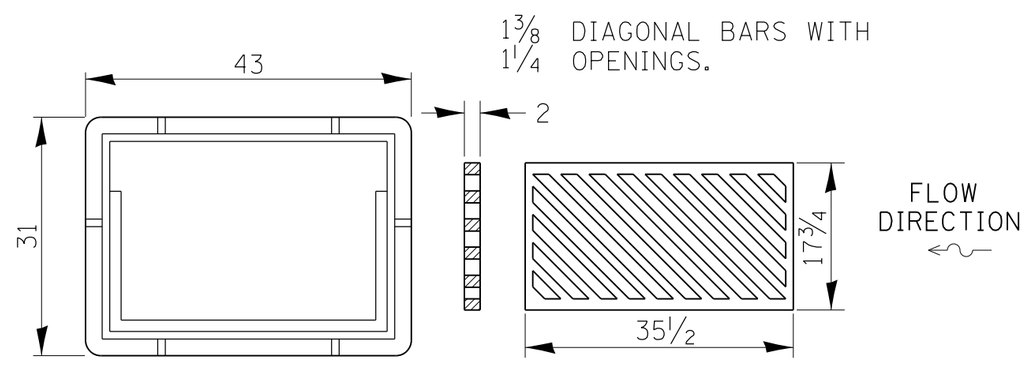

PLAN OF FRAME PLAN OF GRATE

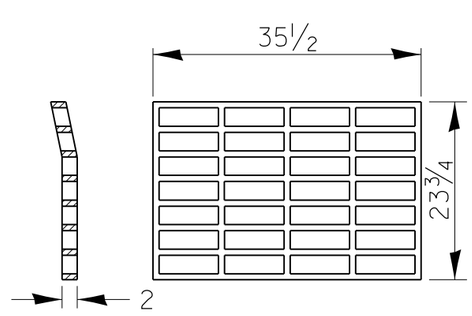

PLAN OF GRATE *

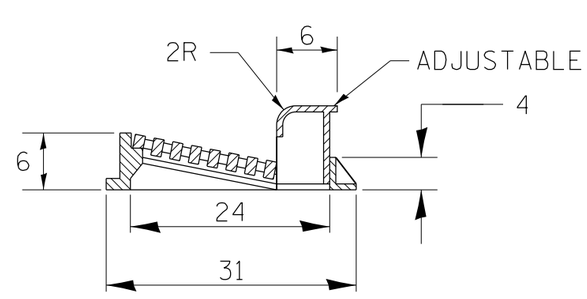

SECTION A-A

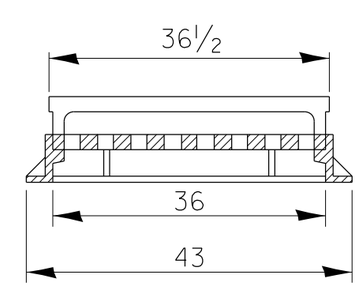

SECTION B-B

* THIS GRATE TO BE USED WITHOUT CURB BOX WHEN INLET IS IN DRIVEWAY.

ALL DIMENSIONS ARE IN INCHES UNLESS OTHERWISE NOTED.

REVISED - 6-27-14	REGION 2 / DISTRICT 2 STANDARD	F.A. RTE.	SECTION	COUNTY	TOTAL SHEETS / SHEET NO.
REVISED - 10-13-11					
REVISED -		CONTRACT NO.			
REVISED -	SCALE: 1.0000 ' / in. / SHEET NO. OF SHEETS / STA. TO STA.	FED. ROAD DIST. NO.	ILLINOIS	FED. AID PROJECT	

PLOT DATE = Thu Nov 13 11:30:08 2014

INLETS, SPECIAL (TYPE A GUTTER)

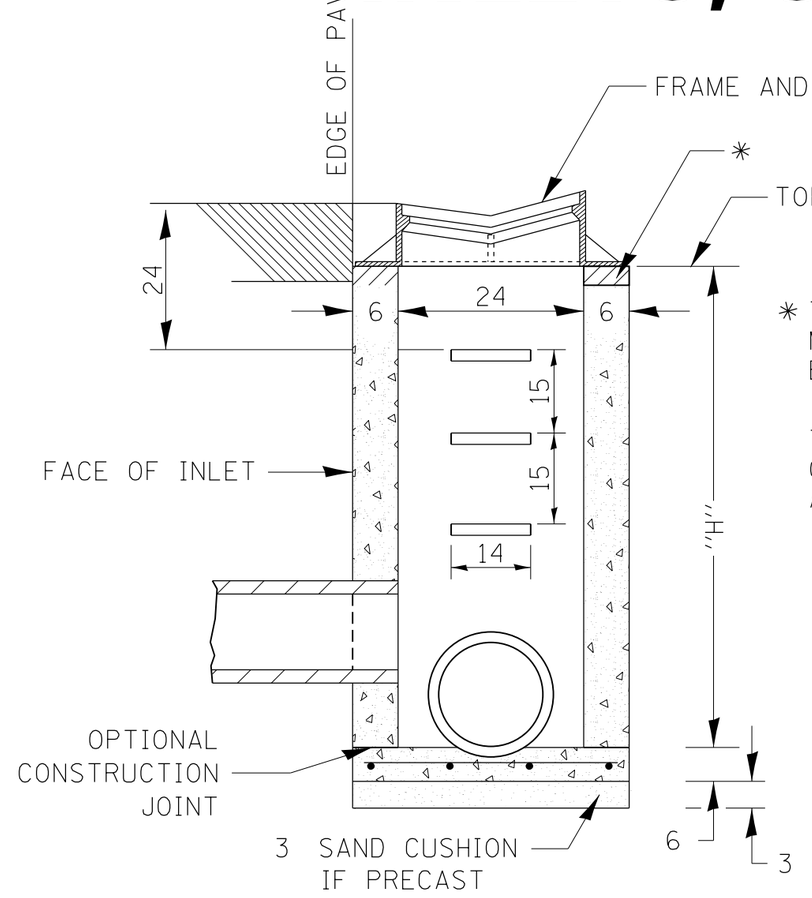

SEC. A-A

* THE WALL ADJUSTMENTS SHALL BE MADE WITH CONCRETE BUILDING BRICK OR CLASS SI CONCRETE.

THE HEIGHT OF THE BOX MAY BE CONSTRUCTED 6 SHORT TO ALLOW FOR FIELD ADJUSTMENTS.

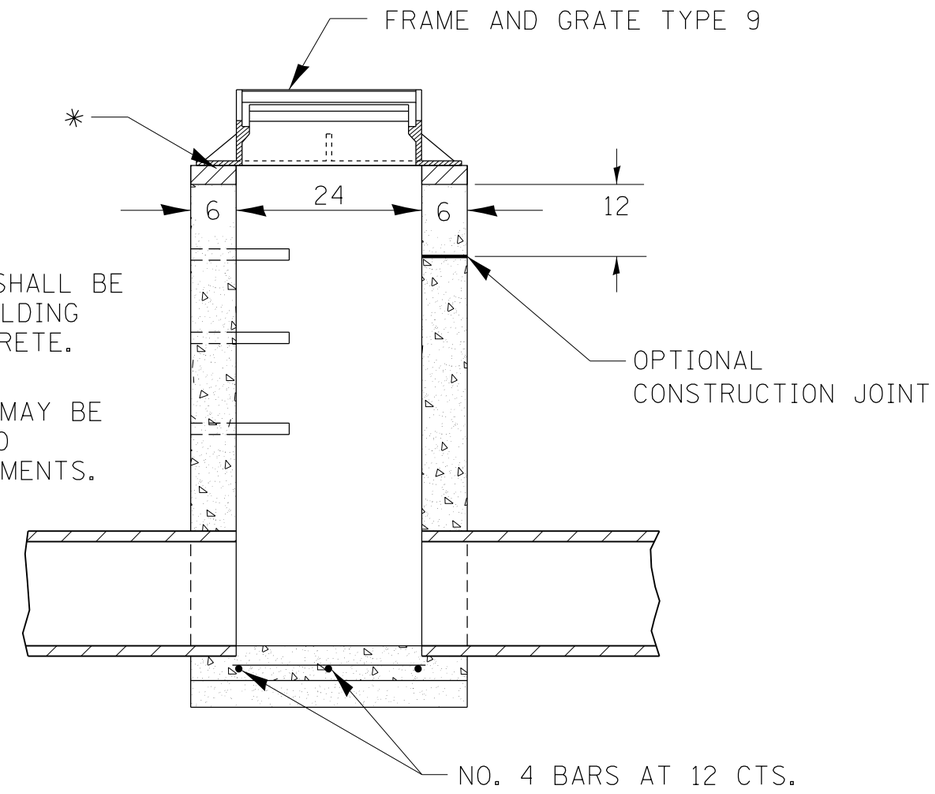

FRAME AND GRATES TYPE 9

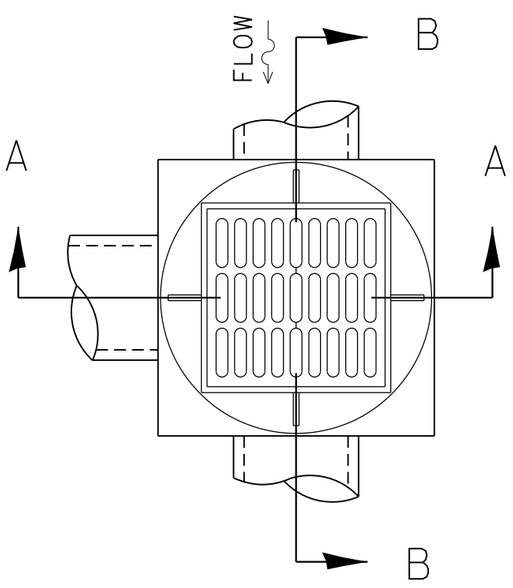

NOTES

SEE STANDARD 602701 FOR DETAILS OF STEPS.

EXCEPT AS NOTED HEREON INLET SPECIAL SHALL BE CONSTRUCTED IN ACCORDANCE WITH SECTION 602 OF THE STANDARD SPECIFICATIONS.

THE SIDE WALLS MAY BE BUILT AS PRECAST SEGMENTED SECTIONS.

ALL VOIDS AROUND PIPE ENTRANCE, BOTH INSIDE AND OUTSIDE, SHALL BE SEALED WITH MORTAR.

WEIGHT OF CAST IRON FRAME & GRATE = 440 LBS. STEPS SHALL BE OMITTED WHEN DEPTH OF "H" IS LESS THAN 5 FT.

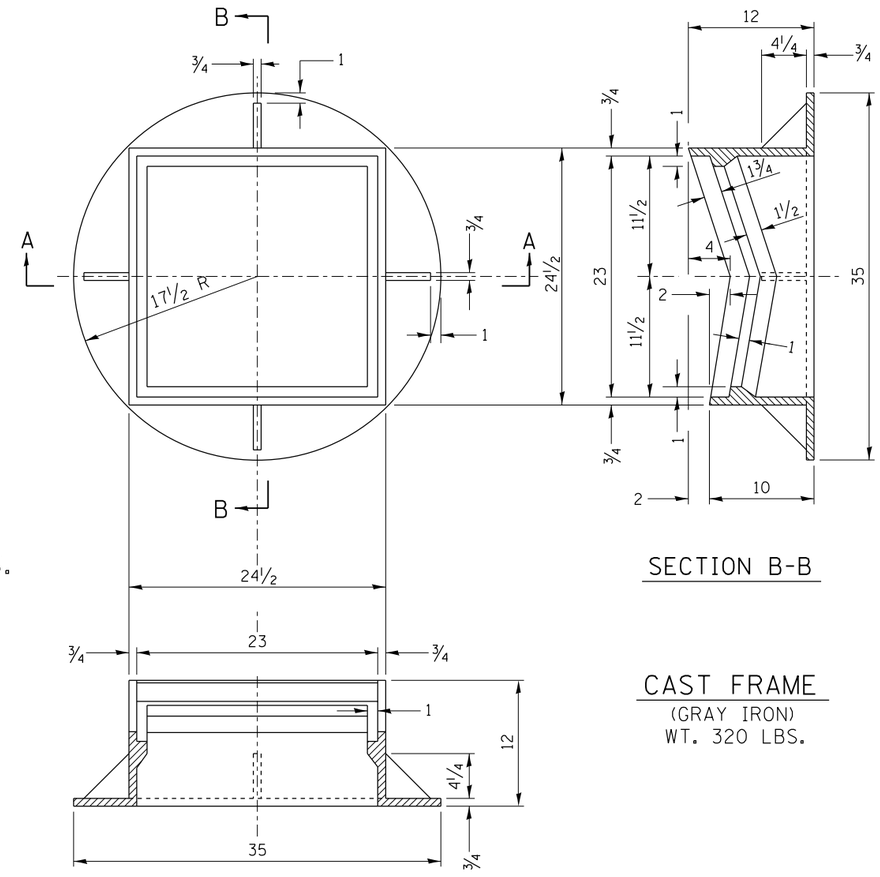

DETAIL OF FRAME & GRATE

NOTES

CLASS SI CONCRETE OR PRECAST CONCRETE SHALL BE USED THROUGHOUT. PRECAST CONCRETE SHALL BE IN ACCORDANCE WITH SECTION 504.01 THRU 504.05 OF THE STANDARD SPECIFICATIONS EXCEPT THAT CONCRETE STRENGTH SHALL BE 4,000 PSI AFTER 28 DAYS.

THE CONTRACT UNIT PRICE EACH FOR INLETS, SPECIAL SHALL INCLUDE THE COST OF CONSTRUCTING THE INLET BOX, FURNISHING AND INSTALLING THE FRAME AND GRATE, THE CAST IRON STEPS (IF USED), THE PRECAST FLOOR SLAB, SAND CUSHION (WHEN USED) AND REINFORCEMENT BARS.

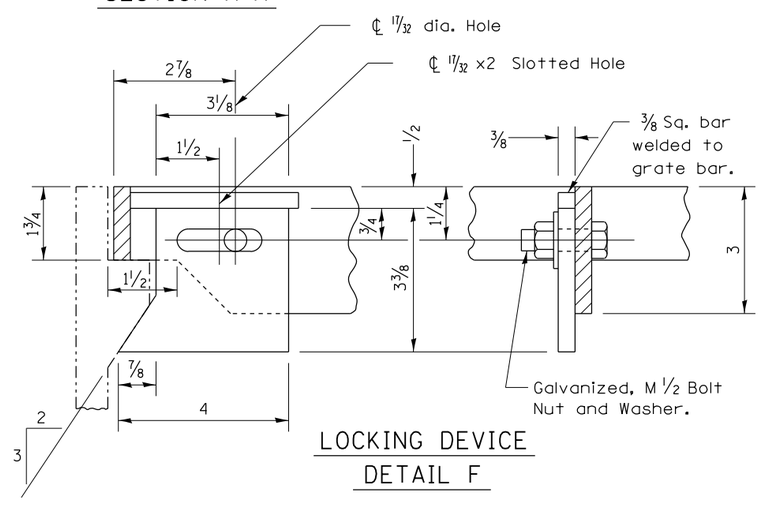

LOCKING DEVICE
DETAIL F

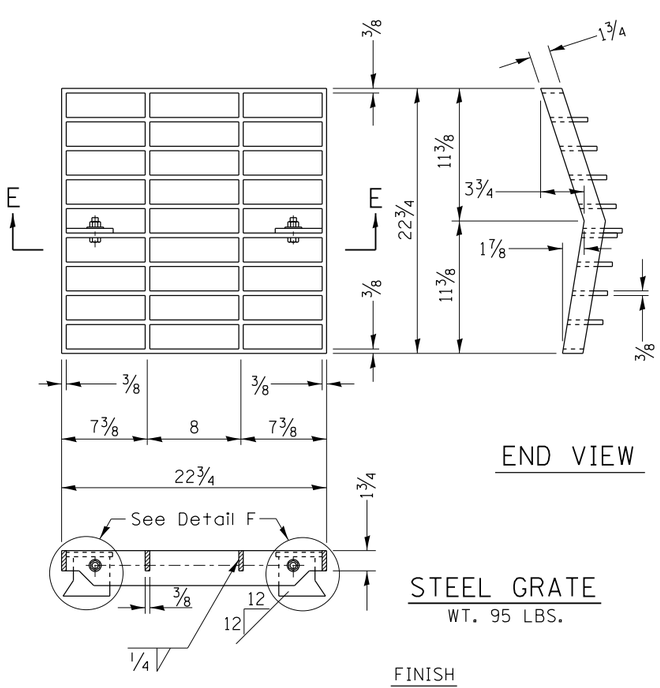

SECTION E-E

END VIEW

STEEL GRATE
WT. 95 LBS.

FINISH
STEEL GRATE SHALL BE GIVEN ONE SHOP COAT OF BLACK BITUMINOUS PAINT.

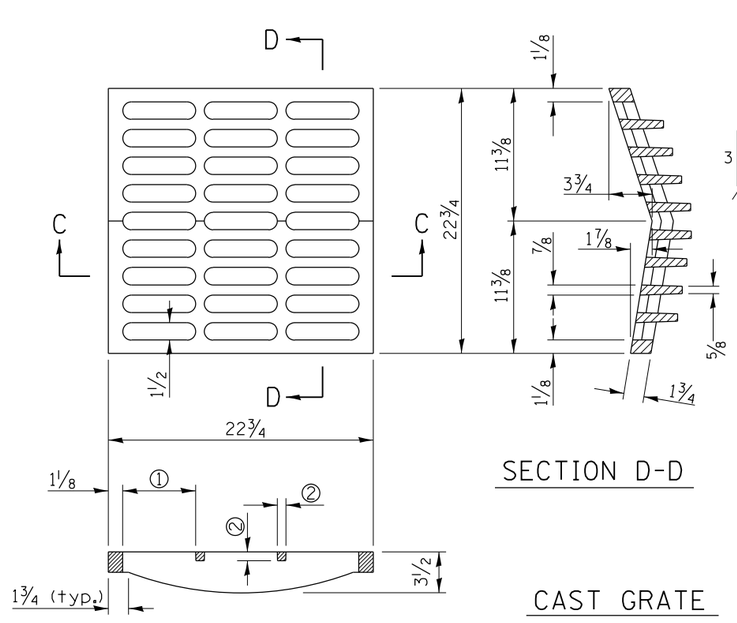

SECTION C-C
① = 6¼ max. (typ.)
② = ¾ min. (typ.)

SECTION D-D

CAST GRATE
120 lbs.

GENERAL NOTES

THE MATERIAL FOR STEEL GRATE SHALL CONFORM TO ARTICLE 1006.04 OF THE STANDARD SPECIFICATIONS.

THE USE OF EITHER A CAST GRATE OR A STEEL GRATE WITH THE CAST FRAME SHALL BE THE OPTION OF THE CONTRACTOR.

THE CAST GRATE MAY BE MADE OF EITHER GRAY IRON OR DUCTILE IRON CONFORMING TO THE STANDARD SPECIFICATIONS. DUCTILE IRON CASTING SHALL BE GRADE 65-45-12

ALL DIMENSIONS ARE IN INCHES UNLESS OTHERWISE NOTED.

REVISED - 6-27-14	REGION 2 / DISTRICT 2 STANDARD	F.A. RTE.	SECTION	COUNTY	TOTAL SHEETS	SHEET NO.
REVISED - 10-13-11						
REVISED -				CONTRACT NO.		
REVISED -	SCALE: 1.0000 ' / in. SHEET NO. OF SHEETS STA. TO STA.	FED. ROAD DIST. NO.	ILLINOIS	FED. AID PROJECT		

PLOT DATE = Thu Nov 13 11:30:09 2014

DOUBLE INLET, SPECIAL

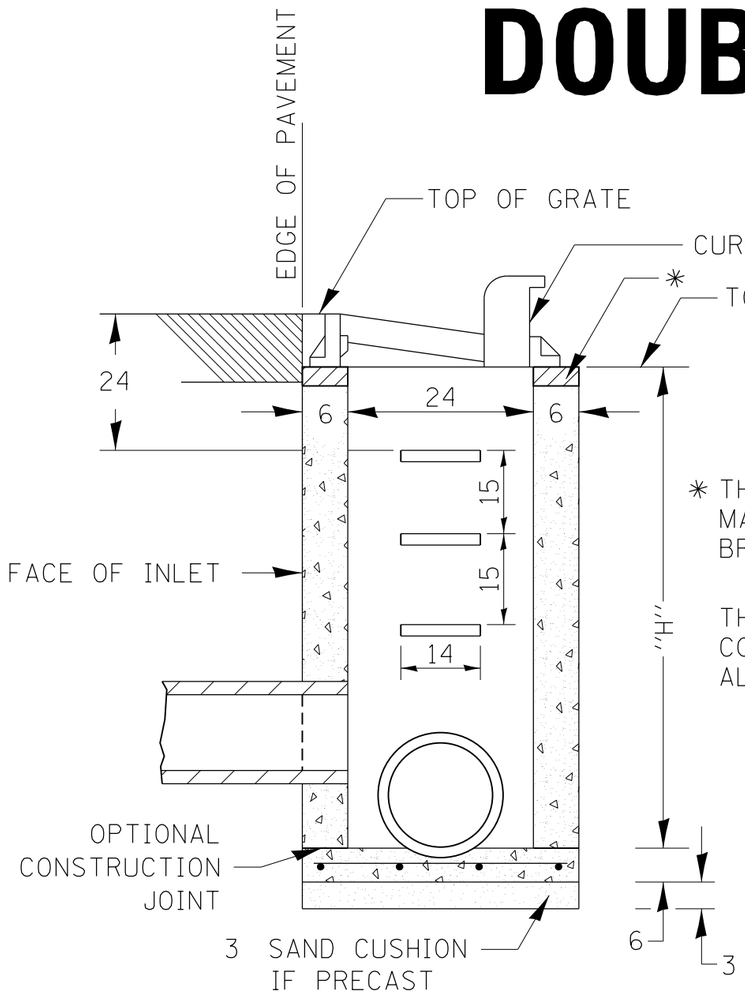

SEC. A-A

✳ THE WALL ADJUSTMENTS SHALL BE MADE WITH CONCRETE BUILDING BRICK OR CLASS SI CONCRETE.

THE HEIGHT OF THE BOX MAY BE CONSTRUCTED 6 SHORT TO ALLOW FOR FIELD ADJUSTMENTS.

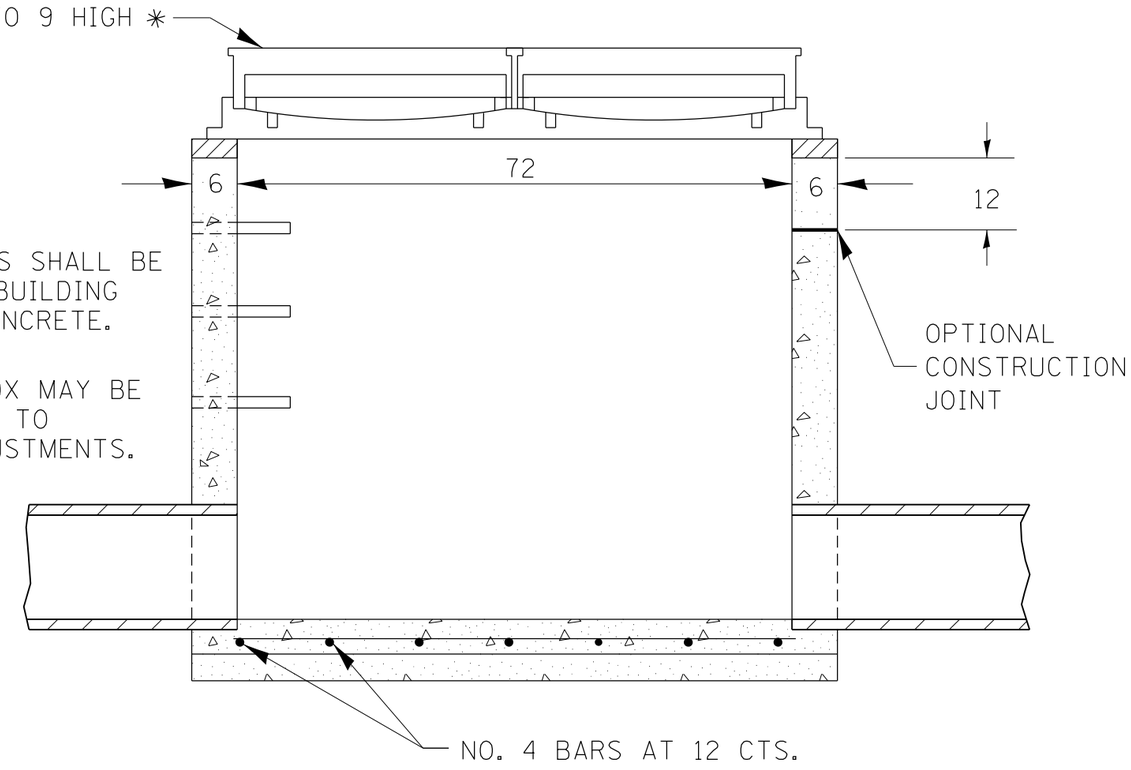

SEC. B-B

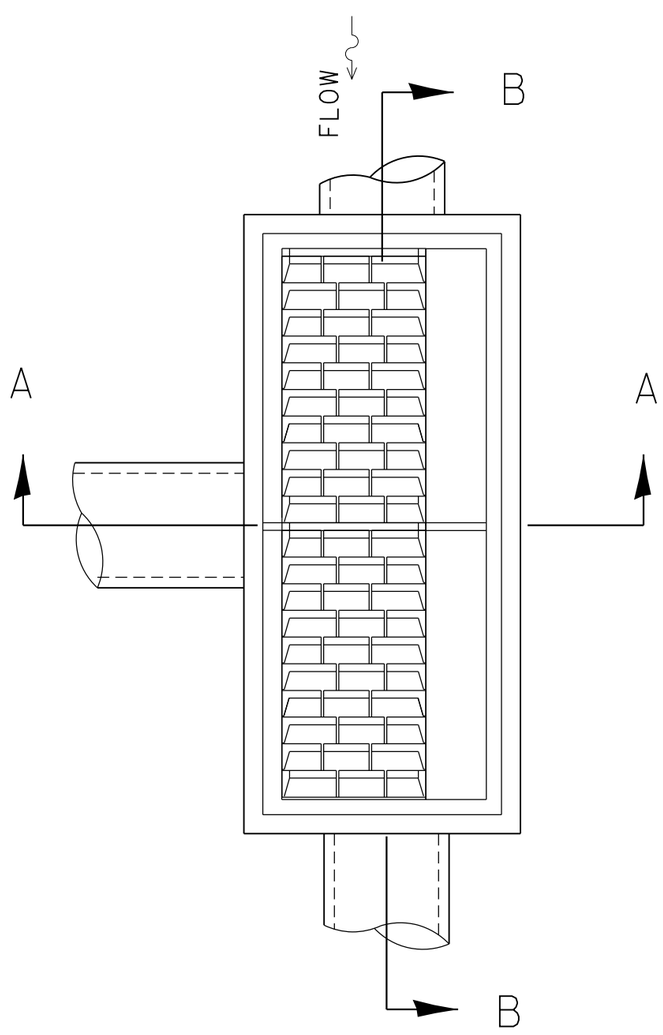

NOTES

SEE STANDARD 602701 FOR DETAILS OF STEPS.

EXCEPT AS NOTED HEREON DOUBLE INLET SPECIAL SHALL BE CONSTRUCTED IN ACCORDANCE WITH SECTION 602 OF THE STANDARD SPECIFICATIONS.

THE SIDE WALLS MAY BE BUILT AS PRECAST SEGMENTED SECTIONS.

ALL VOIDS AROUND PIPE ENTRANCE, BOTH INSIDE AND OUTSIDE, SHALL BE SEALED WITH MORTAR.

R-3295-2 DOUBLE UNIT
STEPS SHALL BE OMITTED WHEN DEPTH OF "H" IS LESS THAN 5 FOOT.

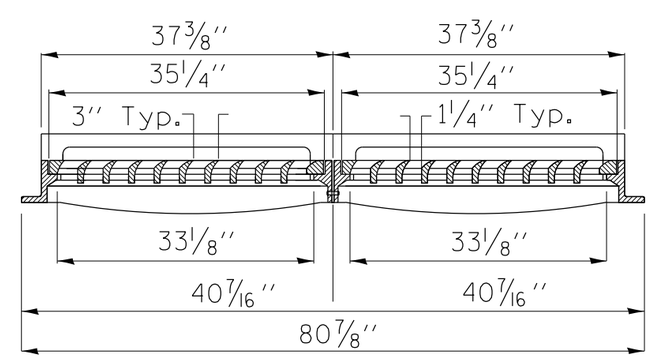

SECTION B-B

DETAIL OF FRAME & GRATE

NOTES

CLASS SI CONCRETE OR PRECAST CONCRETE SHALL BE USED THROUGHOUT. PRECAST CONCRETE SHALL BE IN ACCORDANCE WITH SECTION 504.01 THRU 504.05 OF THE STANDARD SPECIFICATIONS EXCEPT THAT CONCRETE STRENGTH SHALL BE 4,000 psi AFTER 28 DAYS.

THE CONTRACT UNIT PRICE EACH FOR INLET SPECIAL SHALL INCLUDE THE COST OF CONSTRUCTING THE INLET BOX, FURNISHING AND INSTALLING THE FRAME AND GRATE, THE CAST IRON STEPS (IF USED), THE PRECAST FLOOR SLABS, SAND CUSHION (WHEN USED) AND REINFORCEMENT BARS.

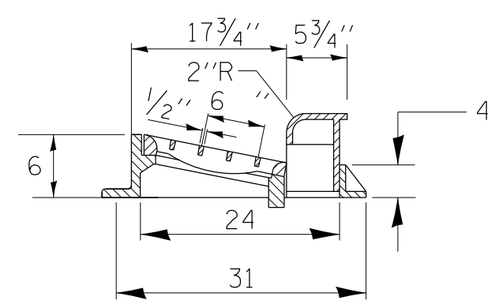

SECTION A-A

ALL DIMENSIONS ARE IN INCHES UNLESS OTHERWISE NOTED.

REVISED - 10-13-11	REGION 2 / DISTRICT 2 STANDARD				F.A. RTE.	SECTION	COUNTY	TOTAL SHEETS / SHEET NO.
REVISED -								
REVISED -							CONTRACT NO.	
REVISED -	SCALE: 1.0000 ' / in.	SHEET NO. OF SHEETS	STA.	TO STA.	FED. ROAD DIST. NO.	ILLINOIS	FED. AID PROJECT	

PLOT DATE = Thu Nov 13 11:30:09 2014

FRAME AND GRATE FOR INLETS, SPECIAL

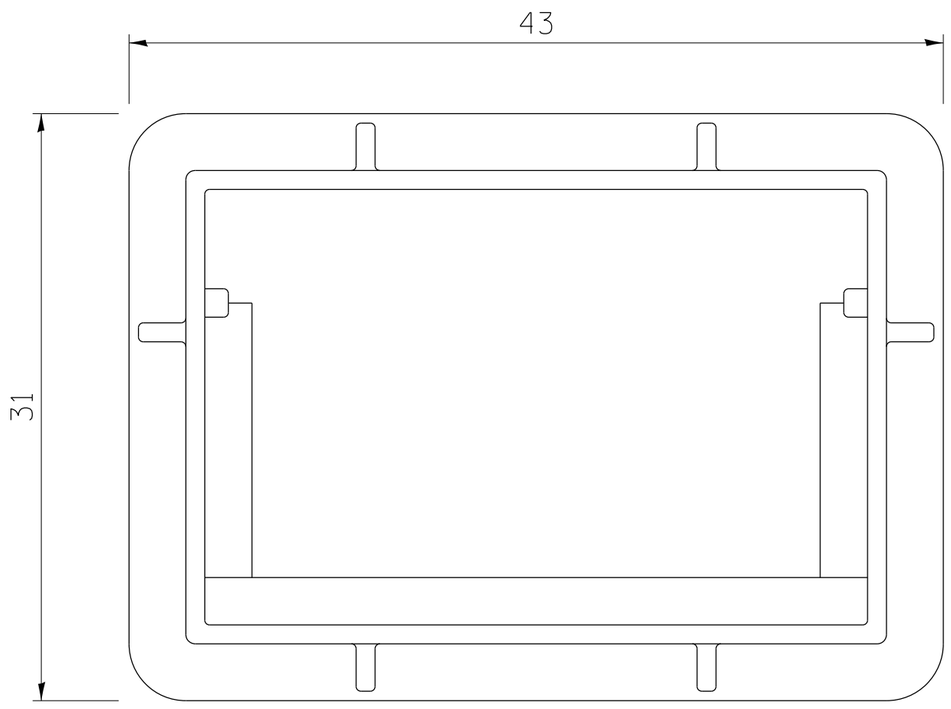

PLAN OF FRAME
WITHOUT GRATE AND CURB BOX

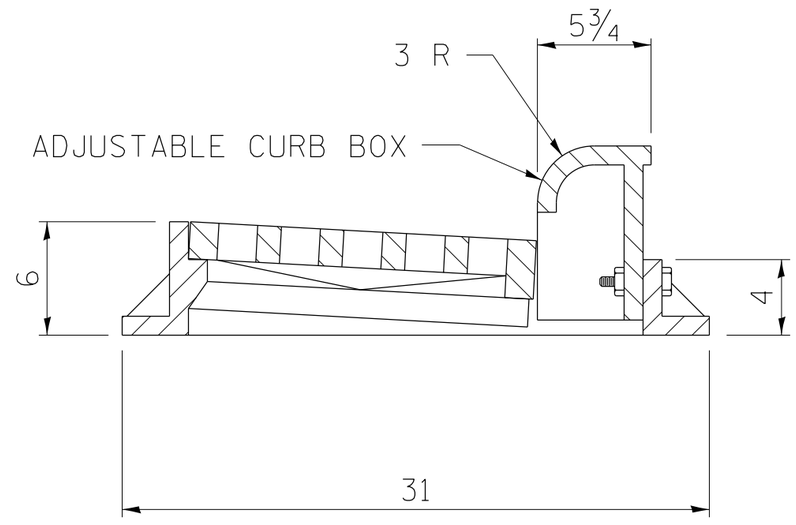

TRANSVERSE SECTION

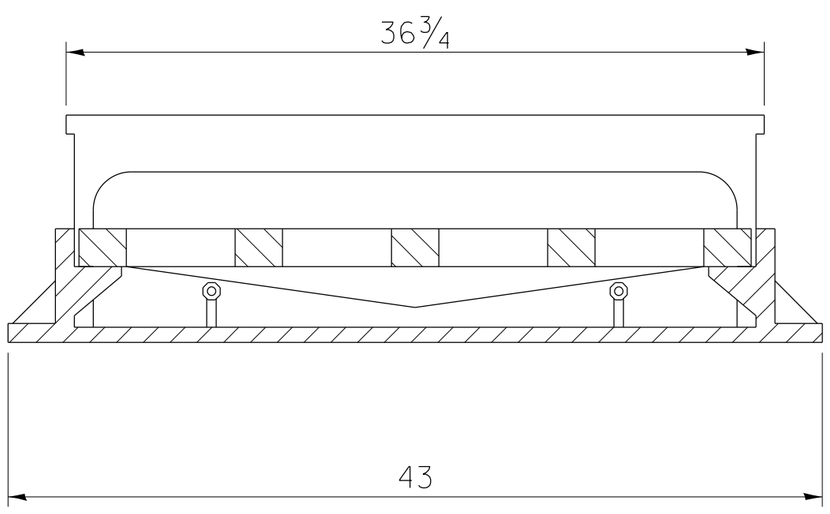

LONGITUDINAL SECTION

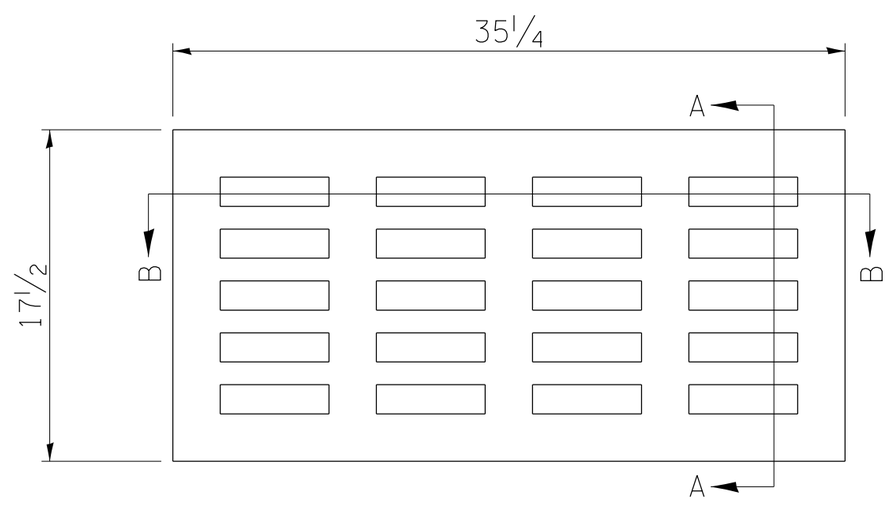

PLAN OF GRATE

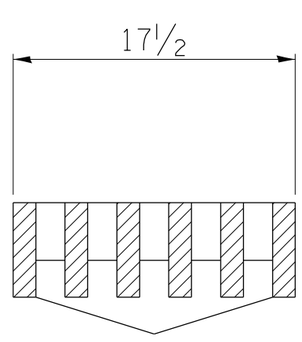

SECTION A-A

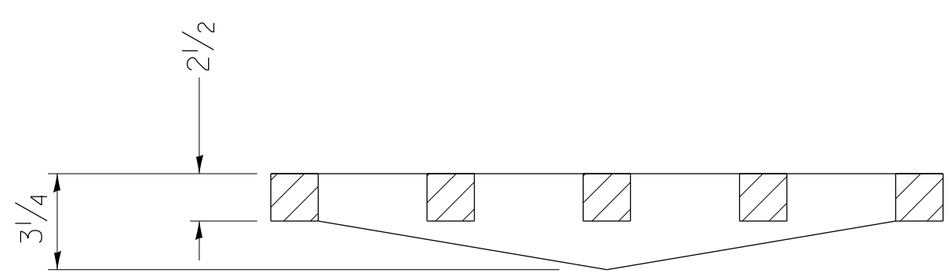

SECTION B-B

ALL DIMENSIONS ARE IN INCHES UNLESS OTHERWISE NOTED.

R 3246 OR EQUIVALENT
APPROXIMATE WEIGHT - 495 LBS.

REVISED - 6-27-14	REGION 2 / DISTRICT 2 STANDARD	F.A. RTE.	SECTION	COUNTY	TOTAL SHEETS / SHEET NO.
REVISED - 10-13-11					
REVISED -				CONTRACT NO.	
REVISED -	SCALE: 1.0000 ' / in. / SHEET NO. OF SHEETS / STA. TO STA.	FED. ROAD DIST. NO.	ILLINOIS	FED. AID PROJECT	

PLOT DATE = Thu Nov 13 11:30:10 2014

FRAME AND GRATE FOR INLETS, SPECIAL

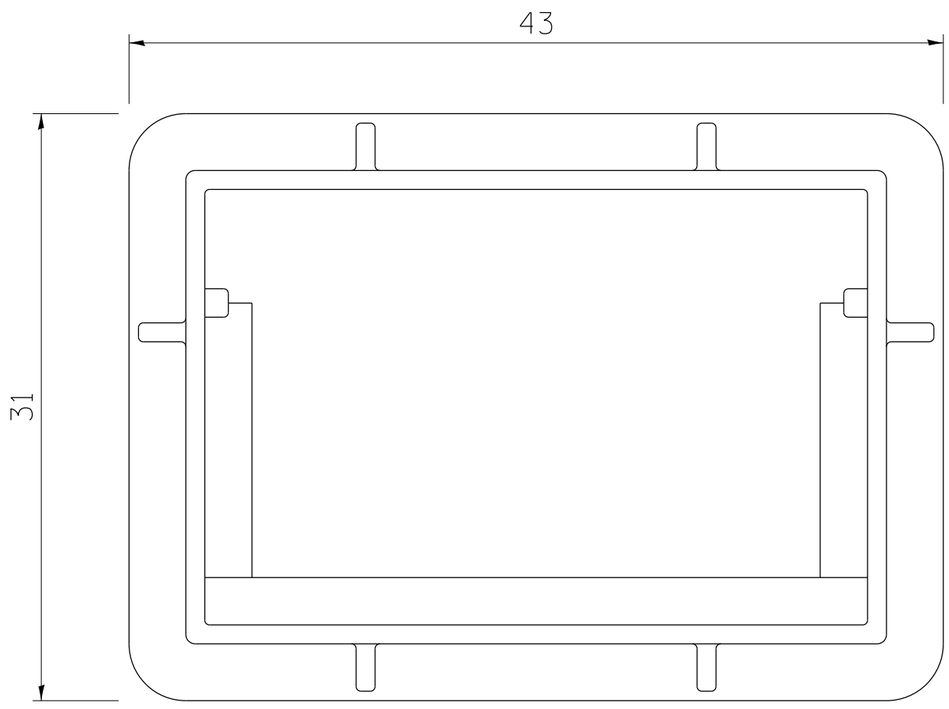

PLAN OF FRAME
WITHOUT GRATE AND CURB BOX

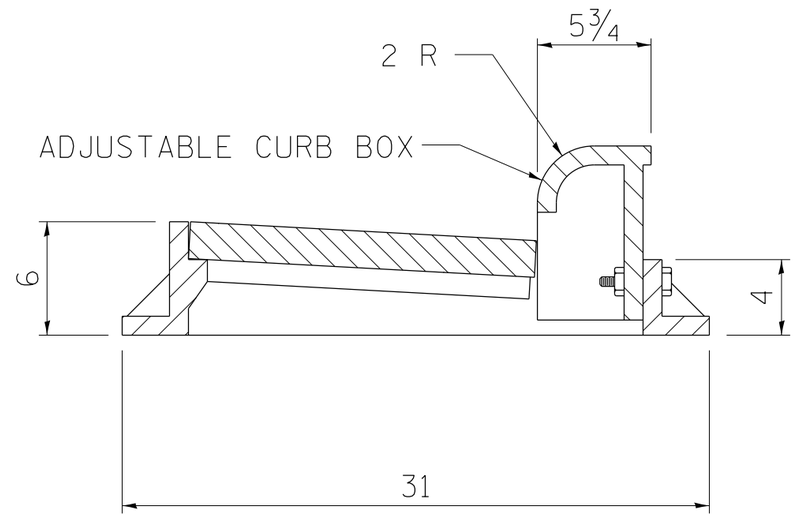

TRANSVERSE SECTION

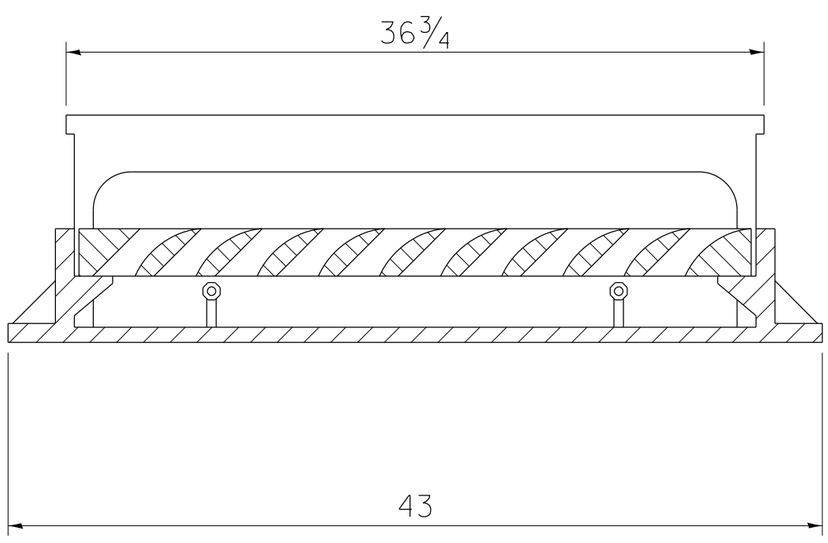

LONGITUDINAL SECTION

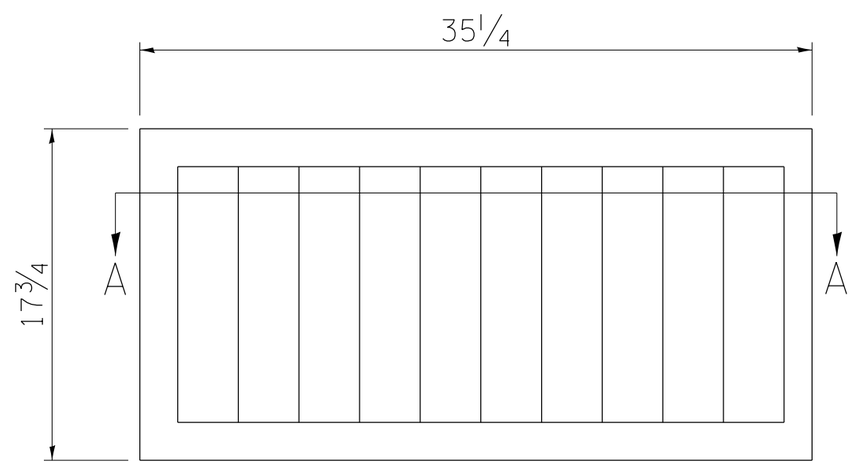

PLAN OF GRATE

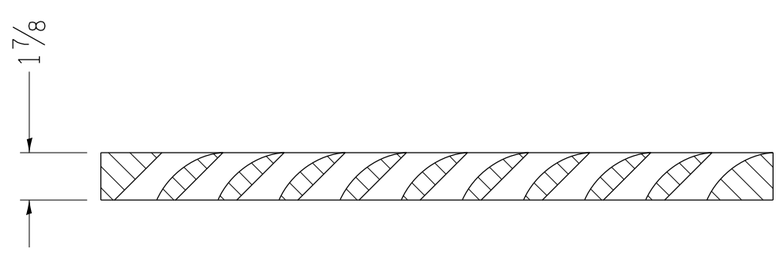

SECTION A-A

ALL DIMENSIONS ARE IN INCHES UNLESS OTHERWISE NOTED.

R 3067 OR EQUIVALENT
APPROXIMATE WEIGHT - 465 LBS.

PLOT DATE = Thu Nov 13 11:30:11 2014

REVISED - 6-27-14	REGION 2 / DISTRICT 2 STANDARD	F.A. RTE.	SECTION	COUNTY	TOTAL SHEETS / SHEET NO.
REVISED - 10-13-11					
REVISED -		CONTRACT NO.			
REVISED -	SCALE: 1.0000 ' / in. / SHEET NO. OF SHEETS / STA. TO STA.	FED. ROAD DIST. NO.	ILLINOIS	FED. AID PROJECT	

FRAME AND GRATE FOR INLETS, SPECIAL

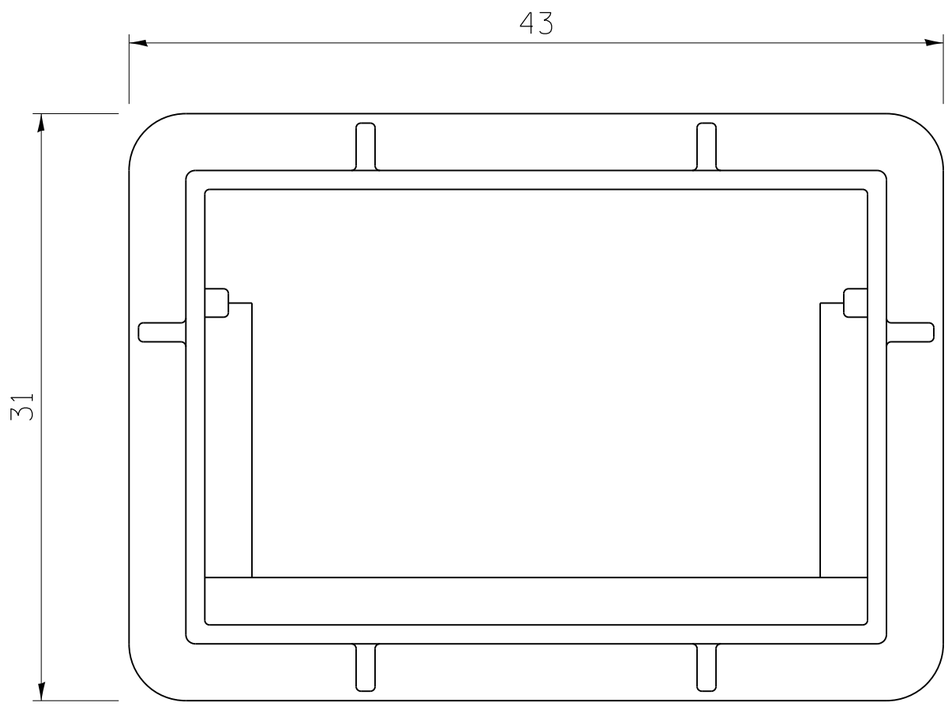

PLAN OF FRAME
WITHOUT GRATE AND CURB BOX

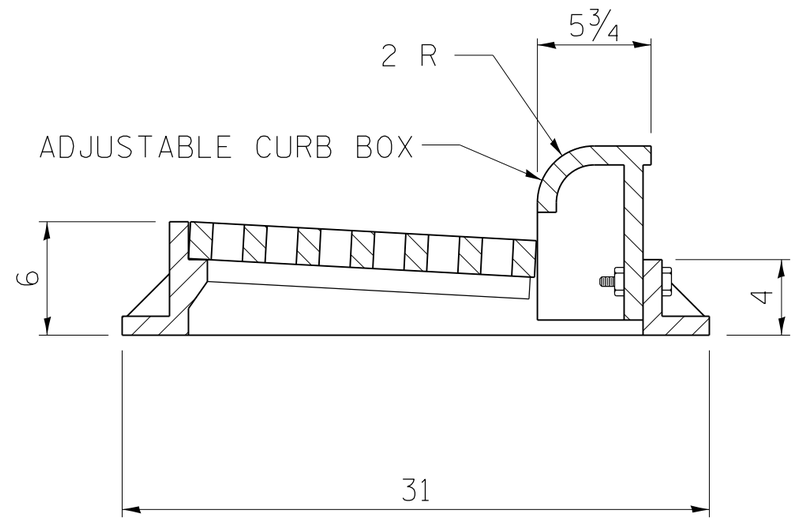

TRANSVERSE SECTION

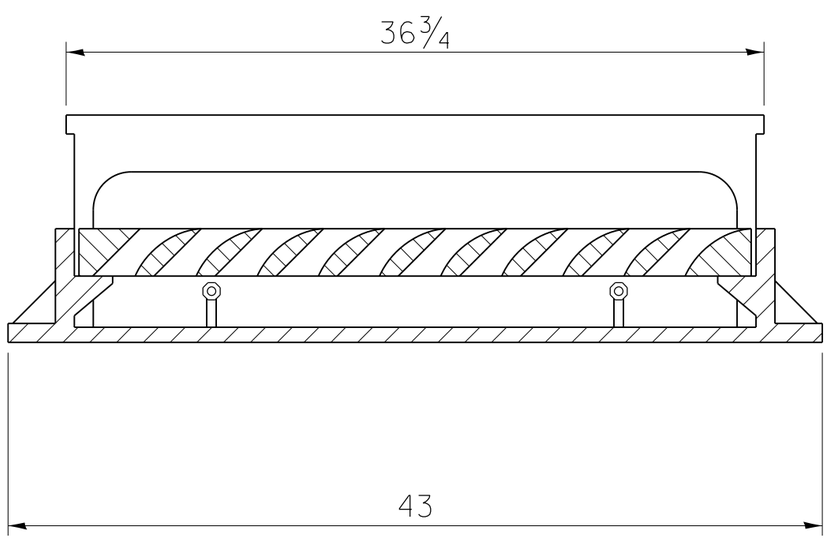

LONGITUDINAL SECTION

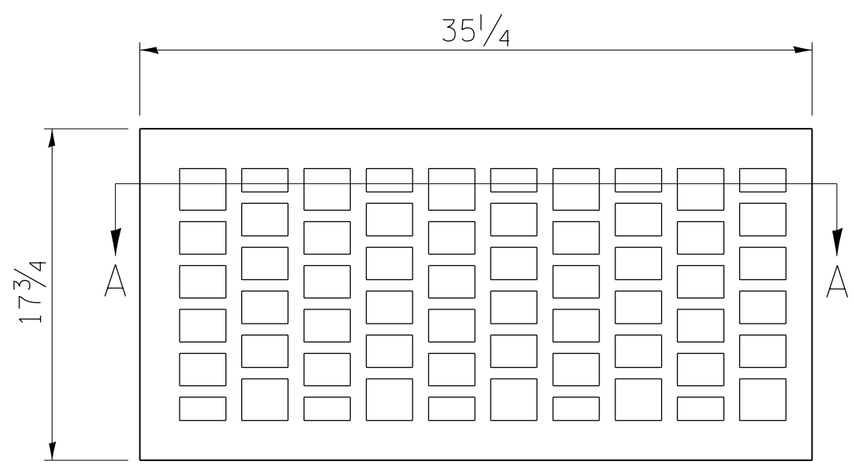

PLAN OF GRATE

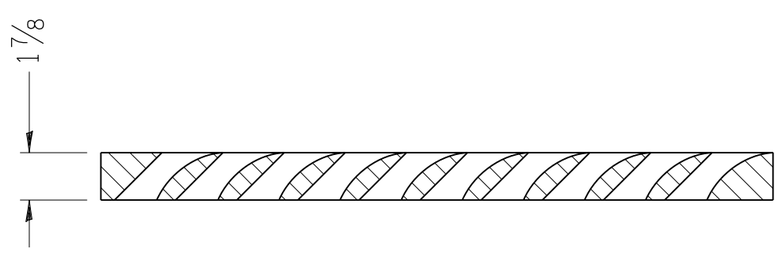

SECTION A-A

ALL DIMENSIONS ARE IN INCHES UNLESS OTHERWISE NOTED.

R 3067 OR EQUIVALENT
APPROXIMATE WEIGHT - 490 LBS.

PLOT DATE = Thu Nov 13 11:30:11 2014

REVISED - 6-27-14	REGION 2 / DISTRICT 2 STANDARD				
REVISED - 10-13-11					
REVISED -					
REVISED -	SCALE: 1.0000 ' / in.	SHEET NO. OF SHEETS	STA.	TO STA.	

F.A. RTE.	SECTION	COUNTY	TOTAL SHEETS	SHEET NO.
		CONTRACT NO.		
FED. ROAD DIST. NO.	ILLINOIS	FED. AID PROJECT		

FRAME AND GRATE FOR INLETS, SPECIAL

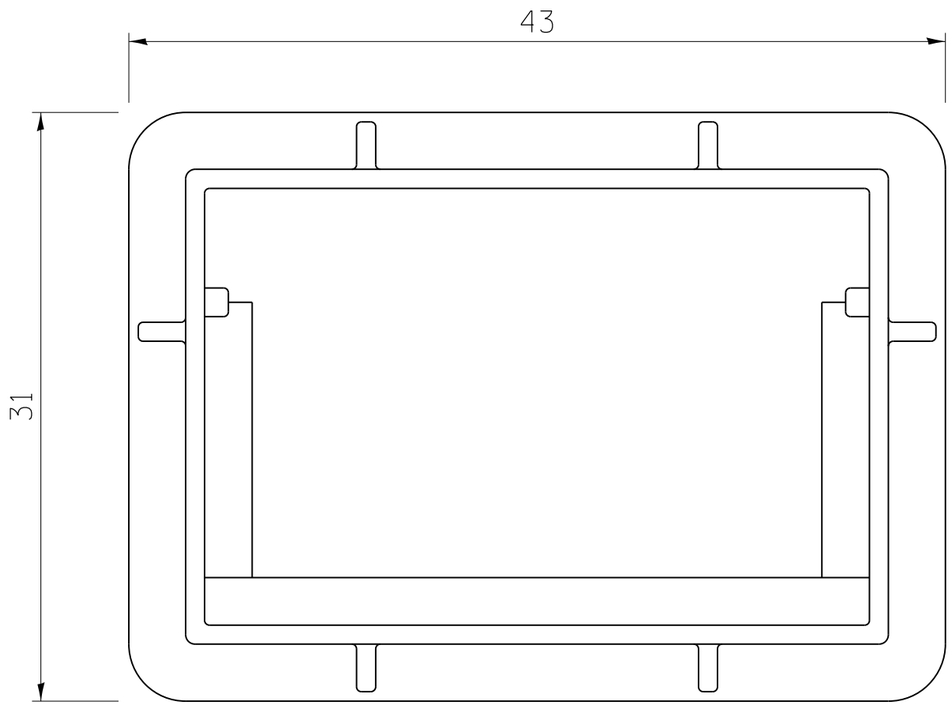

PLAN OF FRAME
WITHOUT GRATE AND CURB BOX

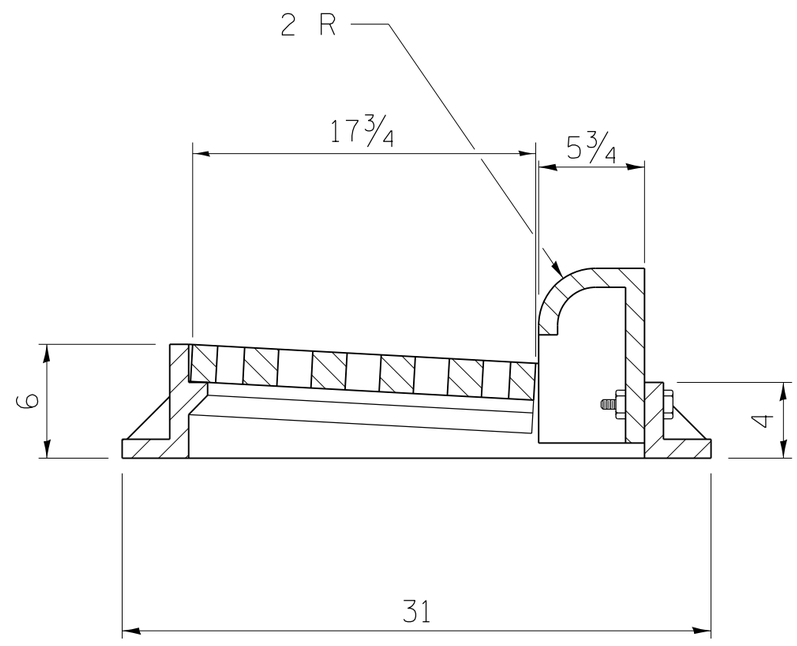

TRANSVERSE SECTION

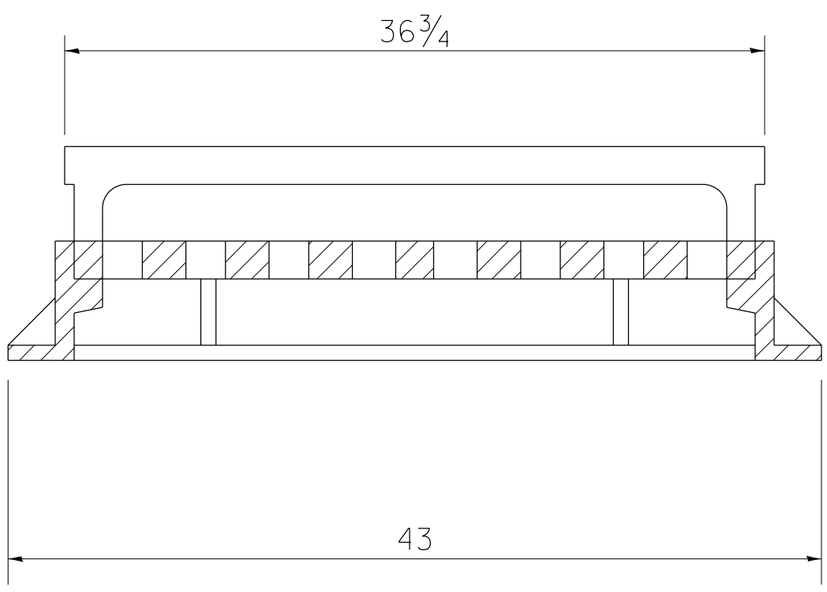

LONGITUDINAL SECTION

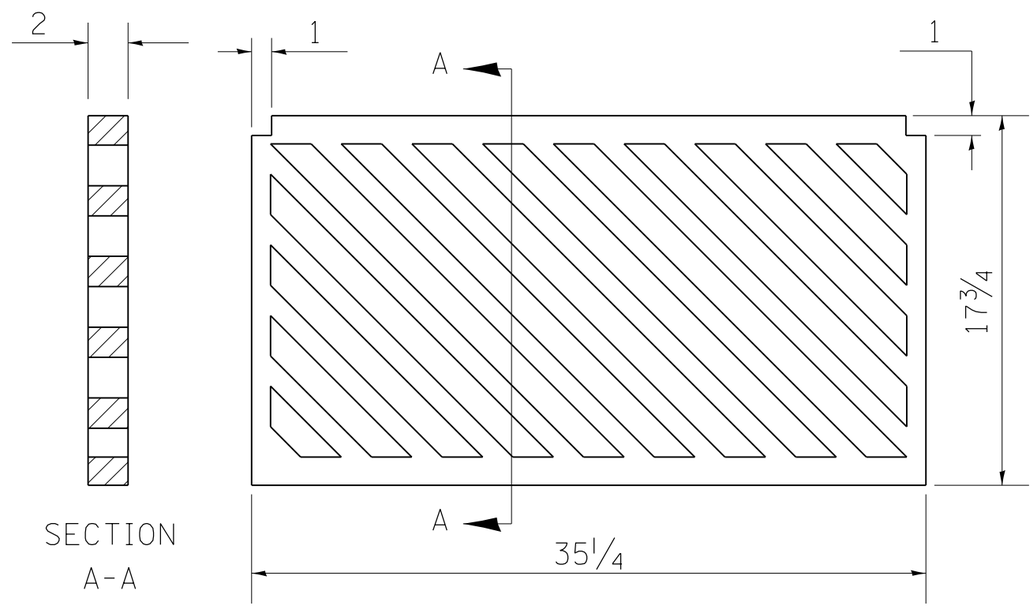

SECTION
A-A

PLAN OF GRATE

ALL DIMENSIONS ARE IN INCHES UNLESS OTHERWISE NOTED.

R 3067 OR EQUIVALENT
APPROXIMATE WEIGHT - 510 LBS.

PLOT DATE = Thu Nov 13 11:30:12 2014

REVISED - 6-27-14	REGION 2 / DISTRICT 2 STANDARD				F.A. RTE.	SECTION	COUNTY	TOTAL SHEETS	SHEET NO.
REVISED - 10-13-11									
REVISED -							CONTRACT NO.		
REVISED -	SCALE: 1.0000 ' / in.	SHEET NO. OF SHEETS	STA.	TO STA.	FED. ROAD DIST. NO.	ILLINOIS	FED. AID PROJECT		

FRAME AND GRATE FOR INLETS, SPECIAL

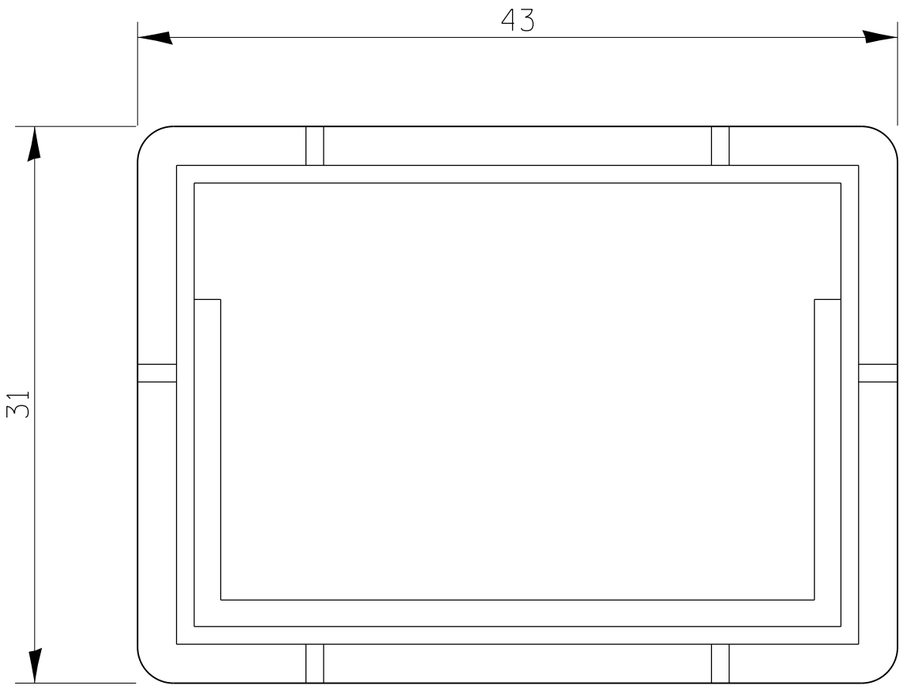

PLAN OF FRAME

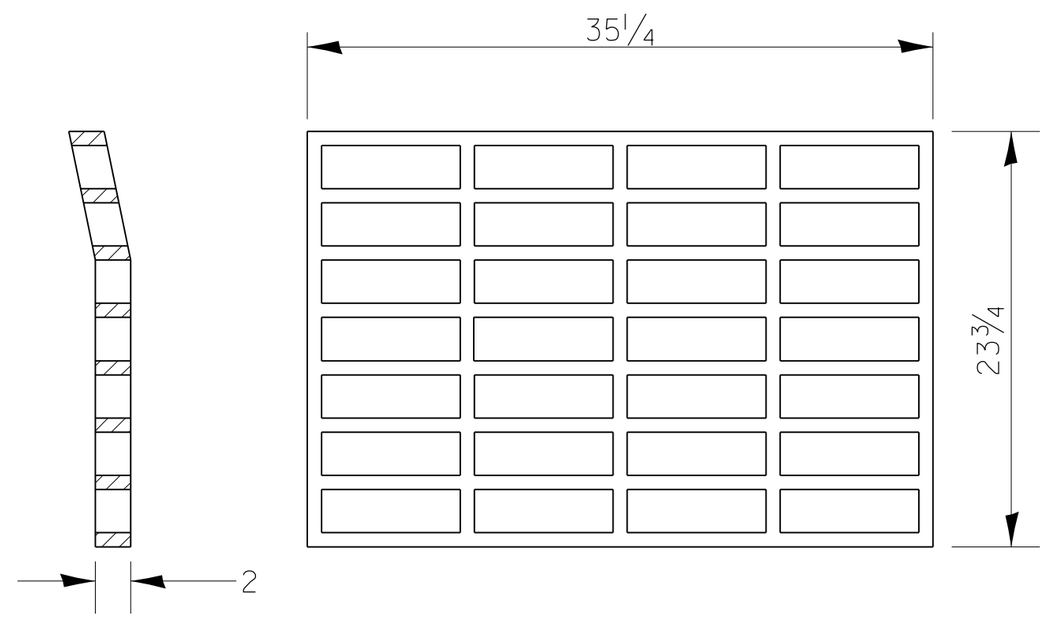

PLAN OF GRATE *

* THIS GRATE TO BE USED WITHOUT CURB BOX WHEN INLET IS IN DRIVEWAY.

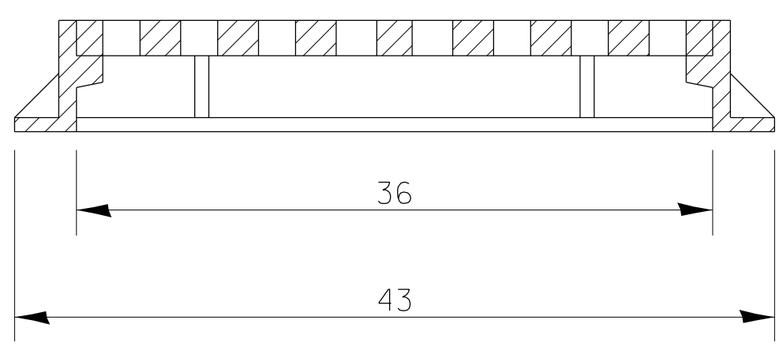

ALL DIMENSIONS ARE IN INCHES UNLESS OTHERWISE NOTED.

APPROXIMATE WEIGHT OF CAST IRON FRAME & GRATE - 530 LBS.

REVISED - 6-27-14	REGION 2 / DISTRICT 2 STANDARD			F.A. RTE.	SECTION	COUNTY	TOTAL SHEETS	SHEET NO.
REVISED - 10-14-11								
REVISED -						CONTRACT NO.		
REVISED -	SCALE: 1.0000 ' / in.	SHEET NO. OF SHEETS	STA. TO STA.	FED. ROAD DIST. NO.	ILLINOIS	FED. AID PROJECT		

PLOT DATE = Thu Nov 13 11:30:13 2014

INLETS, SPECIAL, NO. 1

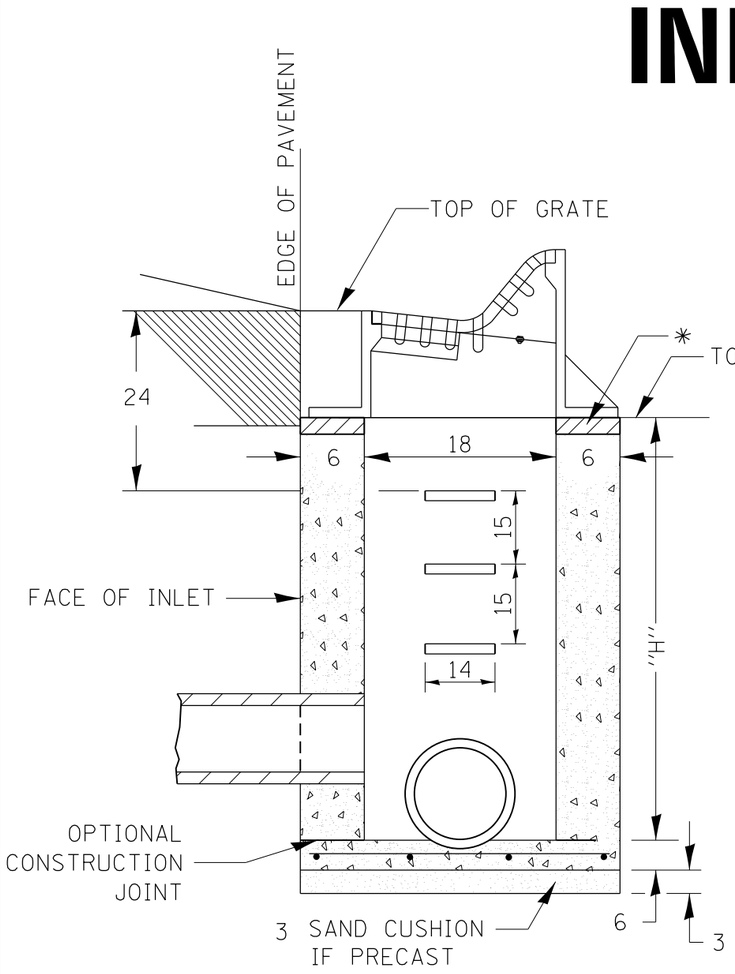

SEC. A-A

* THE WALL ADJUSTMENTS SHALL BE MADE WITH CONCRETE BUILDING BRICK OR CLASS SI CONCRETE.

THE HEIGHT OF THE BOX MAY BE CONSTRUCTED 6 SHORT TO ALLOW FOR FIELD ADJUSTMENTS.

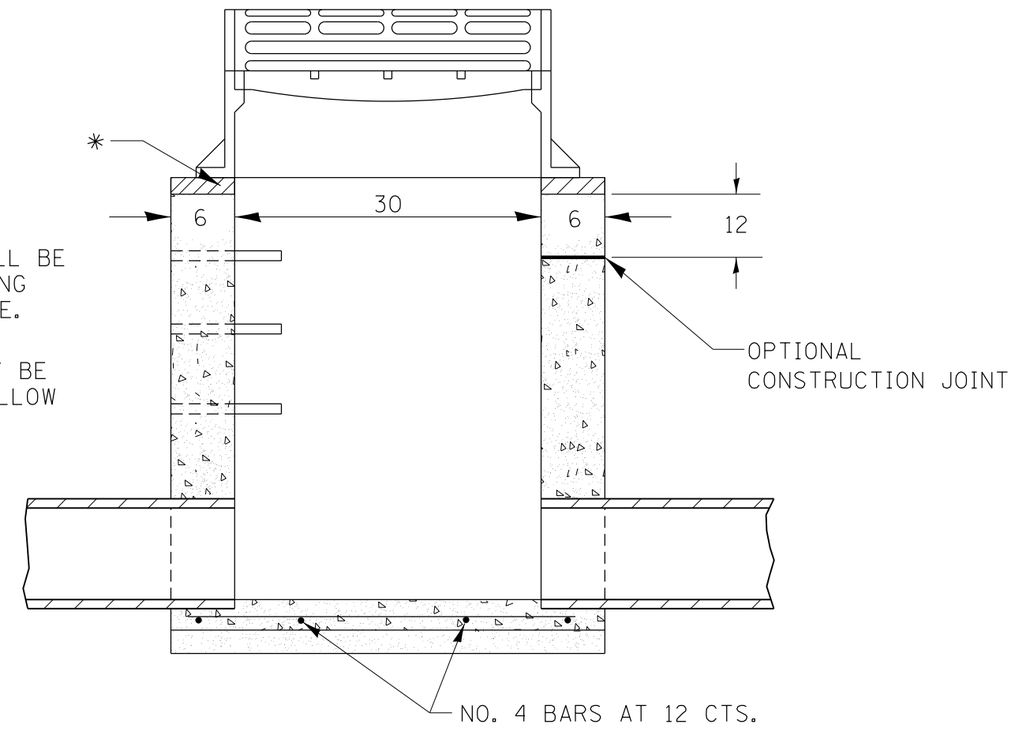

SEC. B-B

NOTES

SEE STANDARD 602701 FOR DETAILS OF STEPS.

EXCEPT AS NOTED HEREON INLET SPECIAL SHALL BE CONSTRUCTED IN ACCORDANCE WITH SECTION 602 OF THE STANDARD SPECIFICATIONS.

THE SIDE WALLS MAY BE BUILT AS PRECAST SEGMENTED SECTIONS.

ALL VOIDS AROUND PIPE ENTRANCE, BOTH INSIDE AND OUTSIDE, SHALL BE SEALED WITH MORTAR.

STEPS SHALL BE OMITTED WHEN DEPTH OF "H" IS LESS THAN 5 FOOT.

BOTH INLET SPECIAL NO. 1 SHALL DRAIN VERTICALLY TO THE ACROSS ROAD CULVERT LOCATED BENEATH.

DETAIL OF FRAME & GRATE

NOTES

CLASS SI CONCRETE OR PRECAST CONCRETE SHALL BE USED THROUGHOUT. PRECAST CONCRETE SHALL BE IN ACCORDANCE WITH SECTION 504.01 THRU 504.05 OF THE STANDARD SPECIFICATIONS EXCEPT THAT CONCRETE STRENGTH SHALL BE 4,000 psi AFTER 28 DAYS.

THE CONTRACT UNIT PRICE EACH FOR INLETS, SPECIAL, NO.1 SHALL INCLUDE THE COST OF CONSTRUCTING THE INLET BOX, FURNISHING AND INSTALLING THE FRAME AND GRATE, THE CAST IRON STEPS (IF USED), THE PRECAST FLOOR SLABS, SAND CUSHION (WHEN USED) AND REINFORCEMENT BARS.

NEENAH # R-3503-B OR EQUIVALENT

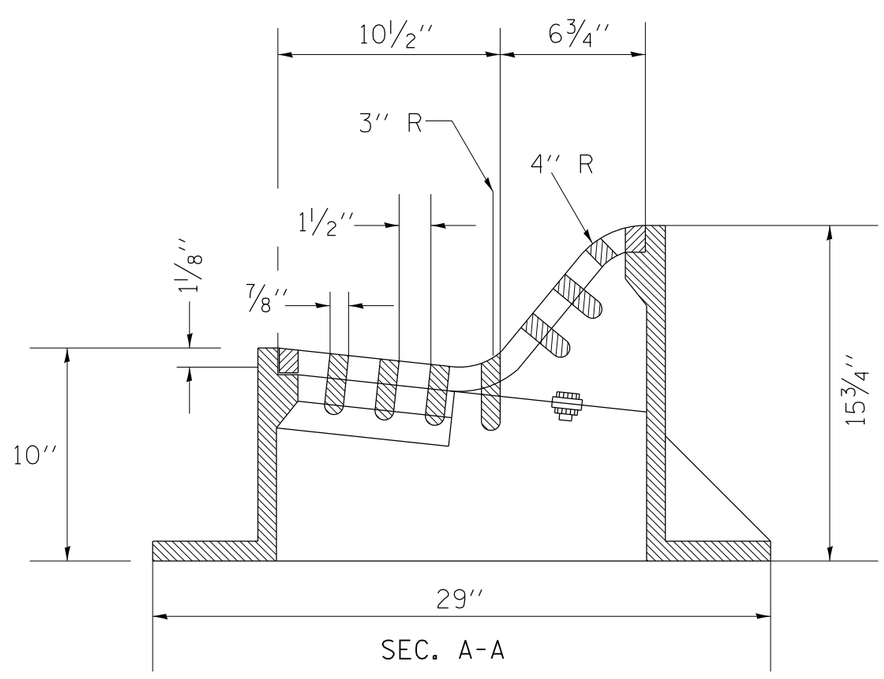

SEC. A-A

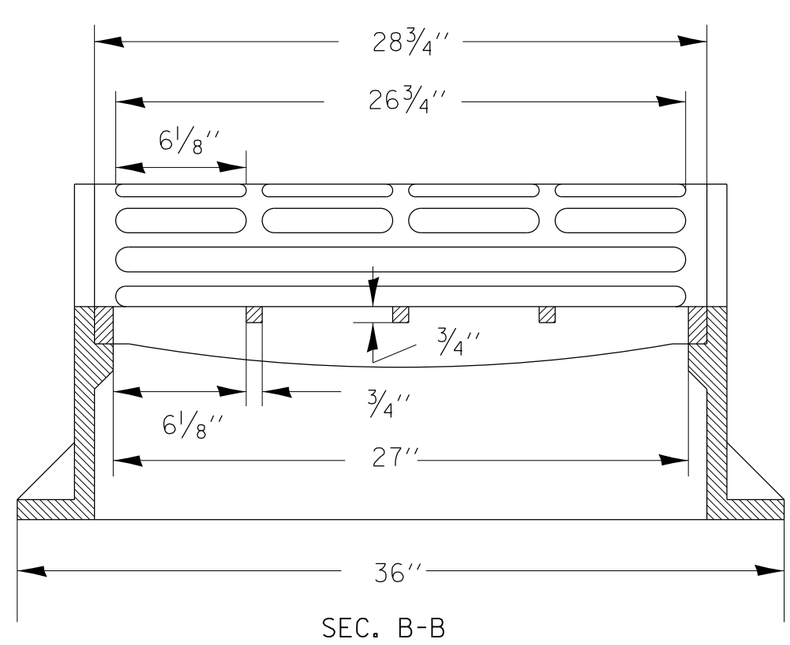

SEC. B-B

ALL DIMENSIONS ARE IN INCHES UNLESS OTHERWISE NOTED.

REVISED - 6-27-14	REGION 2 / DISTRICT 2 STANDARD	F.A. RTE.	SECTION	COUNTY	TOTAL SHEETS / SHEET NO.
REVISED - 10-14-11					
REVISED -		CONTRACT NO.			
REVISED -	SCALE: 1.0000 ' / in. / SHEET NO. OF SHEETS / STA. TO STA.	FED. ROAD DIST. NO.	ILLINOIS	FED. AID PROJECT	

PLOT DATE = Thu Nov 13 11:30:13 2014

INLETS, SPECIAL, NO. 2

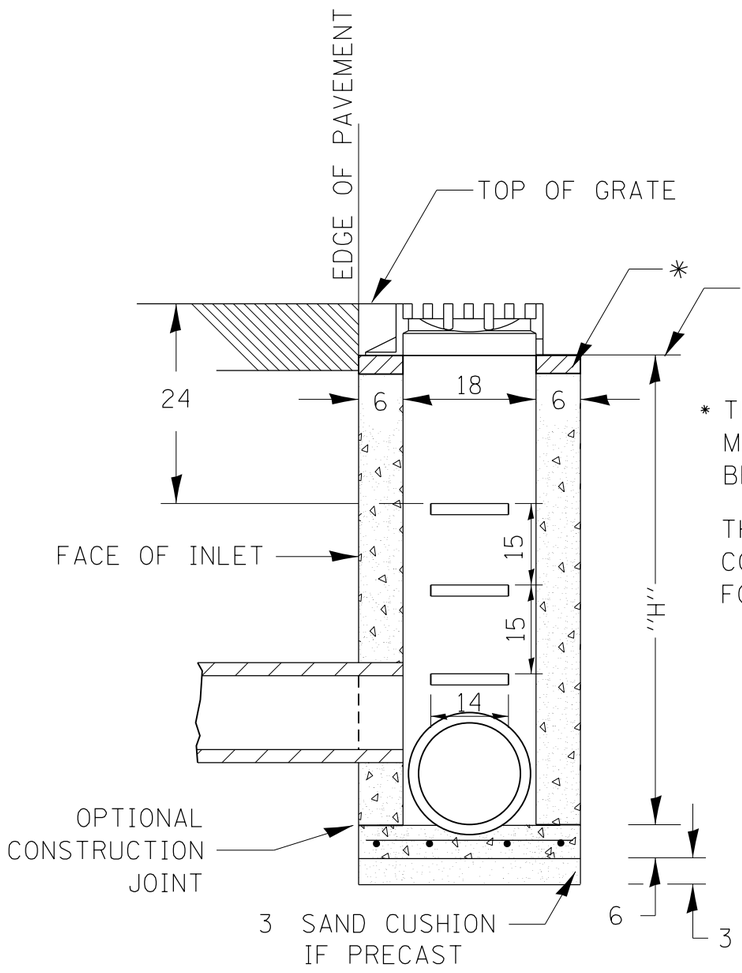

SEC. A-A

* THE WALL ADJUSTMENTS SHALL BE MADE WITH CONCRETE BUILDING BRICK OR CLASS SI CONCRETE.

THE HEIGHT OF THE BOX MAY BE CONSTRUCTED 6 SHORT TO ALLOW FOR FIELD ADJUSTMENTS.

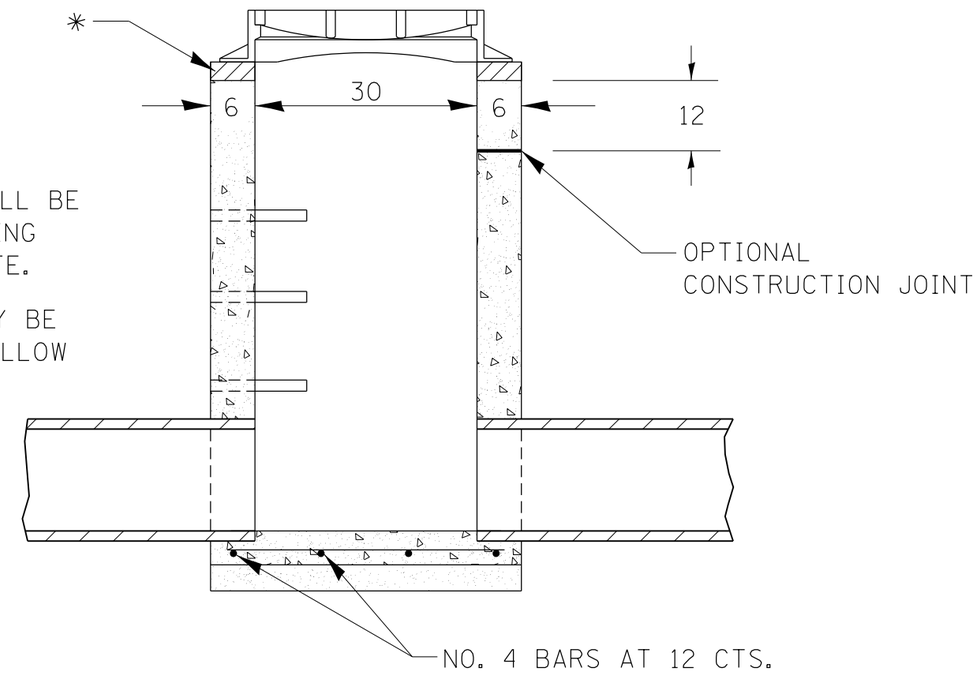

SEC. B-B

NOTES

SEE STANDARD 602701 FOR DETAILS OF STEPS.

EXCEPT AS NOTED HEREON INLET SPECIAL SHALL BE CONSTRUCTED IN ACCORDANCE WITH SECTION 602 OF THE STANDARD SPECIFICATIONS.

THE SIDE WALLS MAY BE BUILT AS PRECAST SEGMENTED SECTIONS.

ALL VOIDS AROUND PIPE ENTRANCE, BOTH INSIDE AND OUTSIDE, SHALL BE SEALED WITH MORTAR.

STEPS SHALL BE OMITTED WHEN DEPTH OF "H" IS LESS THAN 5 FOOT.

INLET SPECIAL NO. 2 ℄ SHALL MATCH THE EXISTING STORM SEWER AS SHOWN ON THE PLANS.

DETAIL OF FRAME & GRATE

NOTES

CLASS SI CONCRETE OR PRECAST CONCRETE SHALL BE USED THROUGHOUT. PRECAST CONCRETE SHALL BE IN ACCORDANCE WITH SECTION 504.01 THRU 504.05 OF THE STANDARD SPECIFICATIONS EXCEPT THAT CONCRETE STRENGTH SHALL BE 4,000 psi AFTER 28 DAYS.

THE CONTRACT UNIT PRICE EACH FOR INLETS, SPECIAL, NO.2 SHALL INCLUDE THE COST OF CONSTRUCTING THE INLET BOX, FURNISHING AND INSTALLING THE FRAME AND GRATE, THE CAST IRON STEPS (IF USED), THE PRECAST FLOOR SLABS, SAND CUSHION (WHEN USED) REINFORCEMENT BARS, AND REMOVAL OF ANY EXCESS STORM SEWER..

NEENAH # R-3461 OR EQUIVALENT

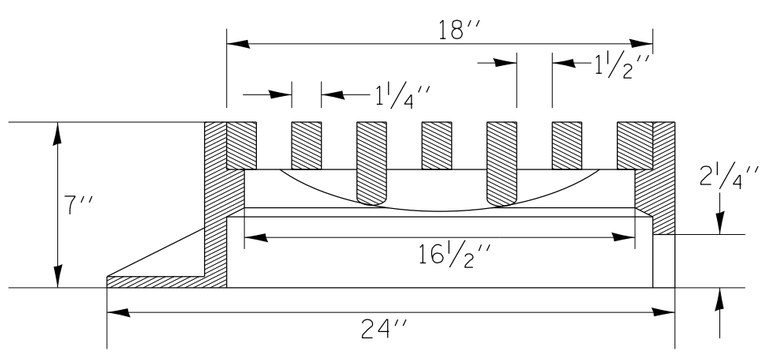

SEC. A-A

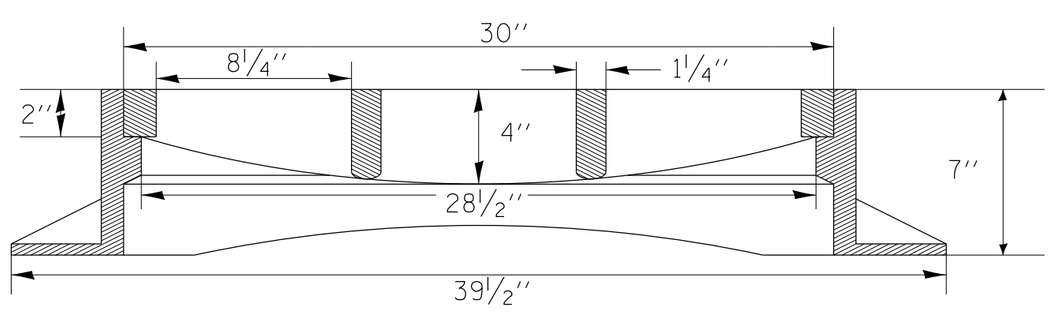

SEC. B-B

REVISED - 6-27-14	REGION 2 / DISTRICT 2 STANDARD				F.A. RTE.	SECTION	COUNTY	TOTAL SHEETS / SHEET NO.
REVISED - 10-14-11								
REVISED -							CONTRACT NO.	
REVISED -	SCALE: 1.0000 ' / in.	SHEET NO. OF SHEETS	STA.	TO STA.	FED. ROAD DIST. NO.	ILLINOIS	FED. AID PROJECT	

PLOT DATE = Thu Nov 13 11:30:14 2014

STANDARD INLET FOR TYPE A GUTTER (SPECIAL)

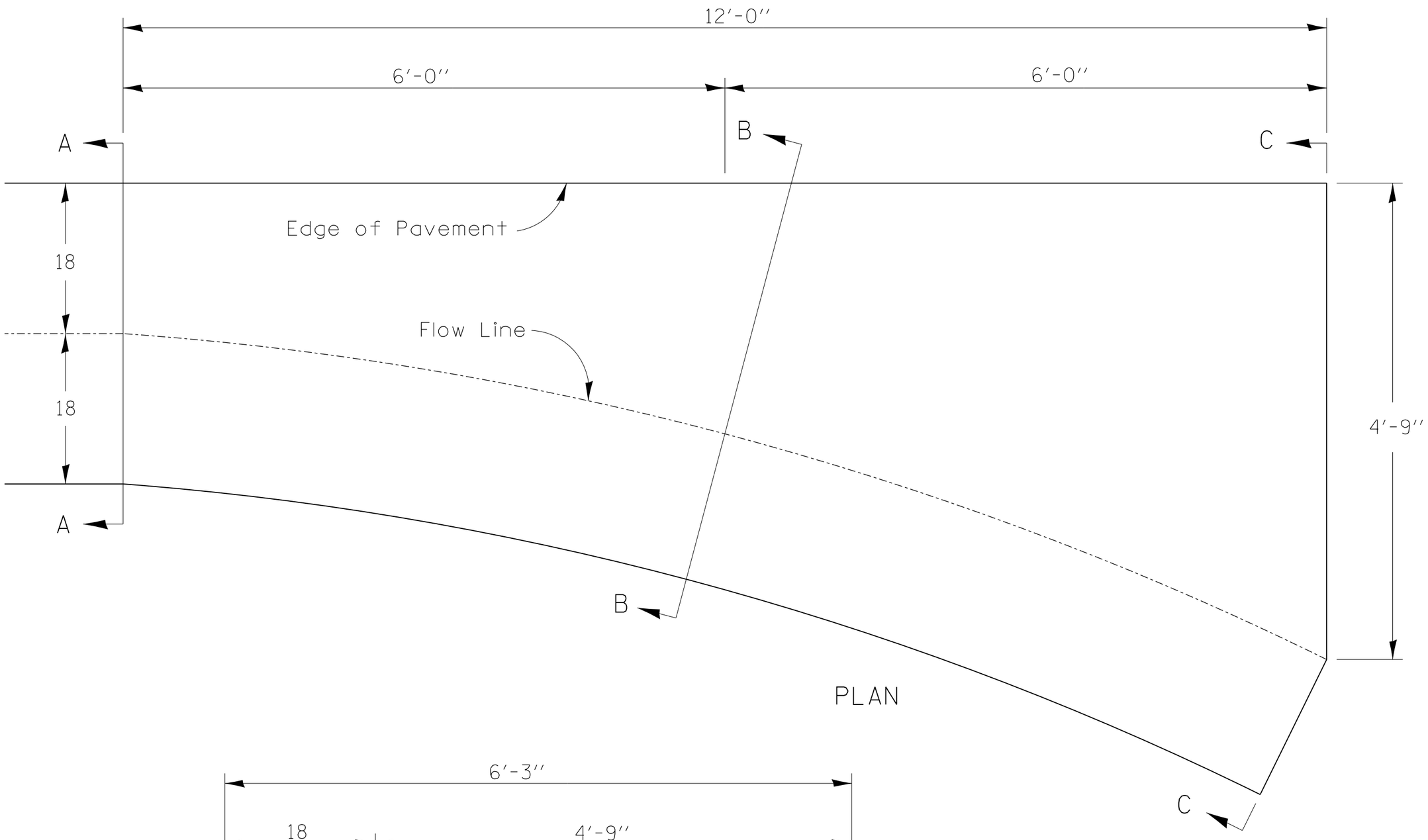

PLAN

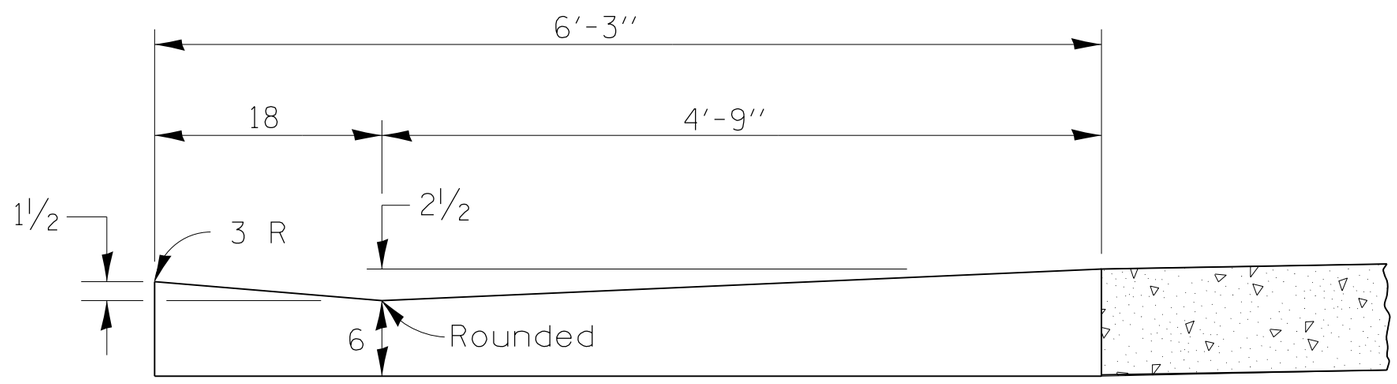

Section C-C

- QUANTITY -
Section A-A to C-C
1.2 Cu. Yds.
Class SI Concrete

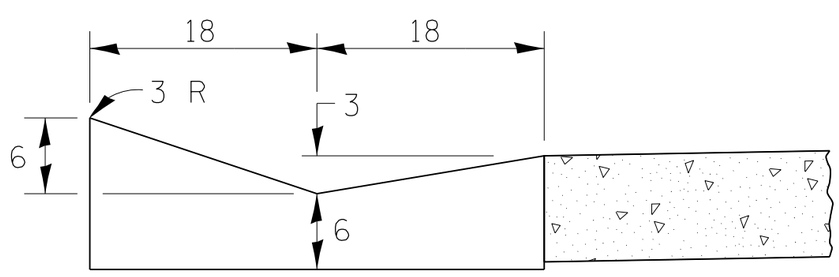

Section A-A

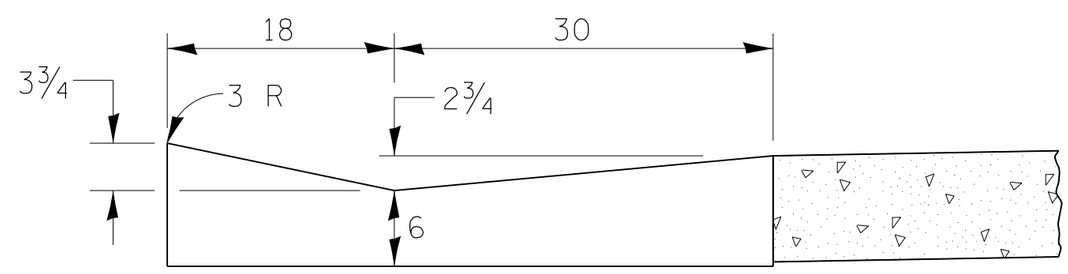

Section B-B

Class SI Concrete shall be used throughout.
The gutter inlet will be paid for at the contract unit price per cubic yard for Class SI Concrete (OUTLETS)

ALL DIMENSIONS ARE IN INCHES UNLESS OTHERWISE NOTED.

PLOT DATE = Thu Nov 13 11:30:15 2014

REVISED - 12-04-13	REGION 2 / DISTRICT 2 STANDARD				F.A. RTE.	SECTION	COUNTY	TOTAL SHEETS / SHEET NO.
REVISED -								
REVISED -							CONTRACT NO.	
REVISED -	SCALE: 1.0000 '/ in.	SHEET NO. OF SHEETS	STA.	TO STA.	FED. ROAD DIST. NO.	ILLINOIS	FED. AID PROJECT	

STANDARD INLET FOR CURB & GUTTER

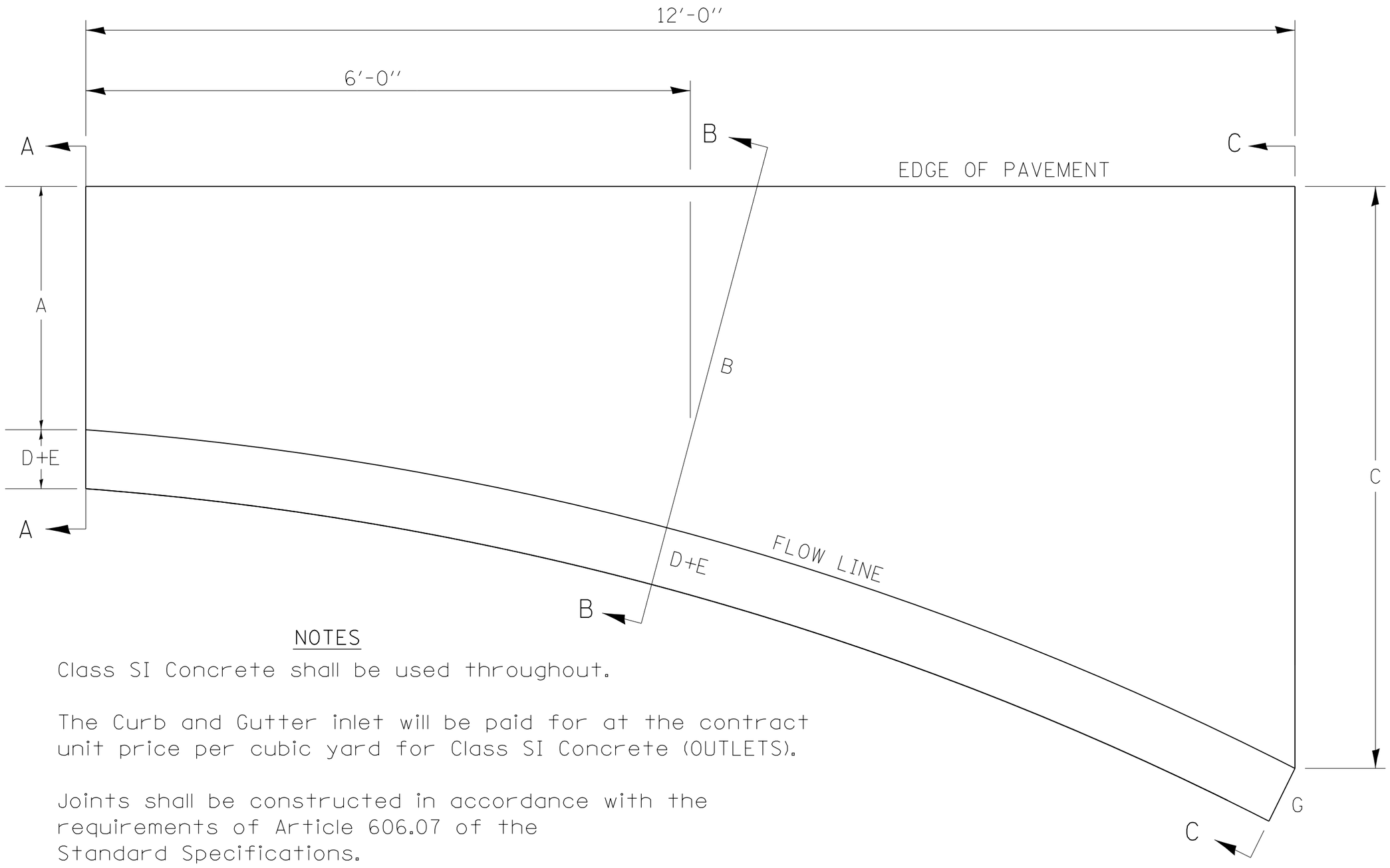

NOTES

Class SI Concrete shall be used throughout.

The Curb and Gutter inlet will be paid for at the contract unit price per cubic yard for Class SI Concrete (OUTLETS).

Joints shall be constructed in accordance with the requirements of Article 606.07 of the Standard Specifications.

When curb and gutter is constructed adjacent to flexible pavement, a 1'' expansion joint shall be installed at construction joints.

All dimensions are in inches unless otherwise noted.

TYPE OF CURB & GUTTER	TABLE OF DIMENSIONS								CONCRETE QUANTITY A-A TO C-C (CU YDS)
	A	B	C	D	E	F	G	R	
B-6.06	6	15	4'	1	6	6	7	1	0.87
B-6.12	12	18.25	4'	1	6	6	7	1	0.95
B-6.18	18	27.25	4' 9''	1	6	6	7	1	1.18
B-6.24	24	32.4	4' 9''	1	6	6	7	1	1.30
M-4.06	6	17.8	3' 9''	4	3	4	7	3	0.75
M-4.12	12	18.25	4'	4	3	4	7	3	0.91
M-4.18	18	27.25	4' 9''	4	3	4	7	3	1.14
M-4.24	24	32.4	4' 9''	4	3	4	7	3	1.25
M-6.06	6	17.8	3' 9''	6	2	6	8	3	0.86
M-6.12	12	18.25	4'	6	2	6	8	2	0.96
M-6.18	18	27.25	4' 9''	6	2	6	8	2	1.20
M-6.24	24	32.4	4' 9''	6	2	6	8	2	1.30

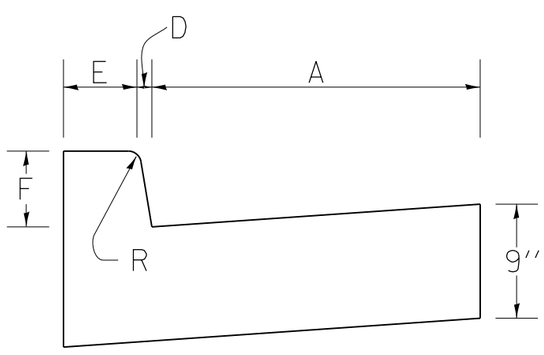

SECTION A-A

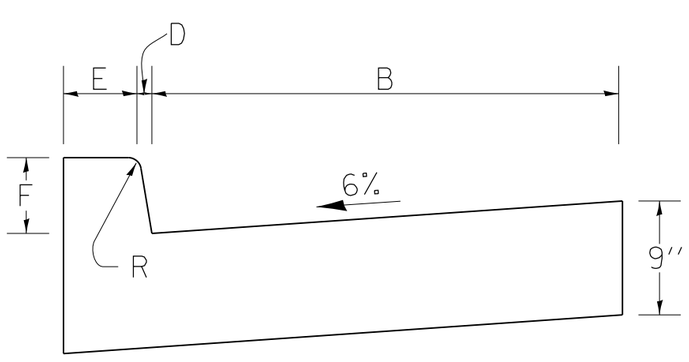

SECTION B-B

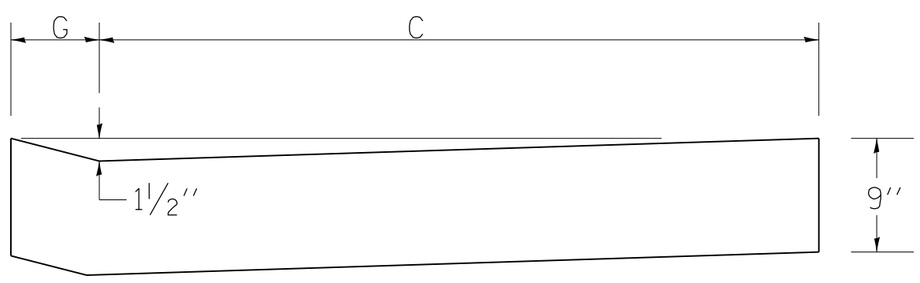

SECTION C-C

REVISED - 11-12-14	REGION 2 / DISTRICT 2 STANDARD	F.A. RTE.	SECTION	COUNTY	TOTAL SHEETS	SHEET NO.
REVISED - 8-27-13						
REVISED - 10-10-06				CONTRACT NO.		
REVISED -	SCALE: 1.0000 '/ in. SHEET NO. OF SHEETS STA. TO STA.	FED. ROAD DIST. NO.	ILLINOIS	FED. AID PROJECT		

PLOT DATE = Thu Nov 13 11:30:15 2014

FIELD TILE JUNCTION VAULTS 2' AND 3' DIA.

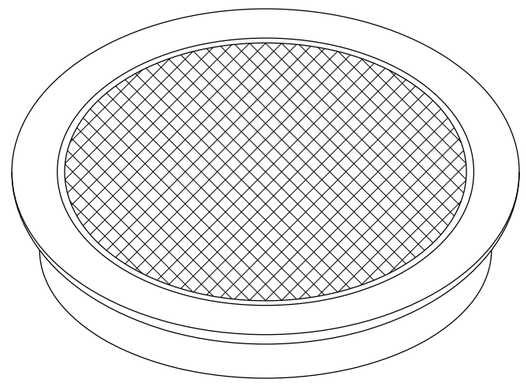

FRAME & LID FOR 2' VAULT

FRAME & LID FOR 3' VAULT

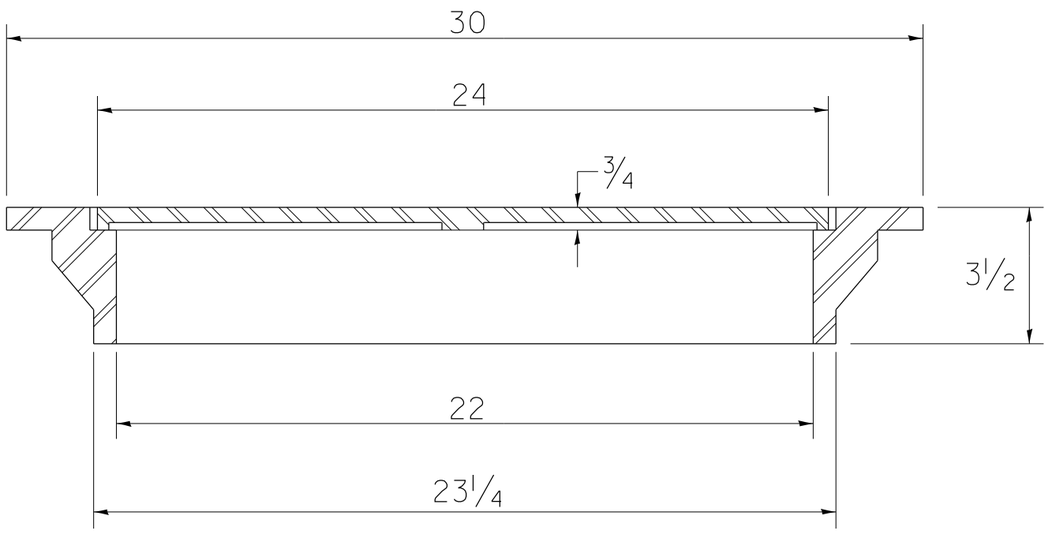

TOTAL WEIGHT: 146 LBS.

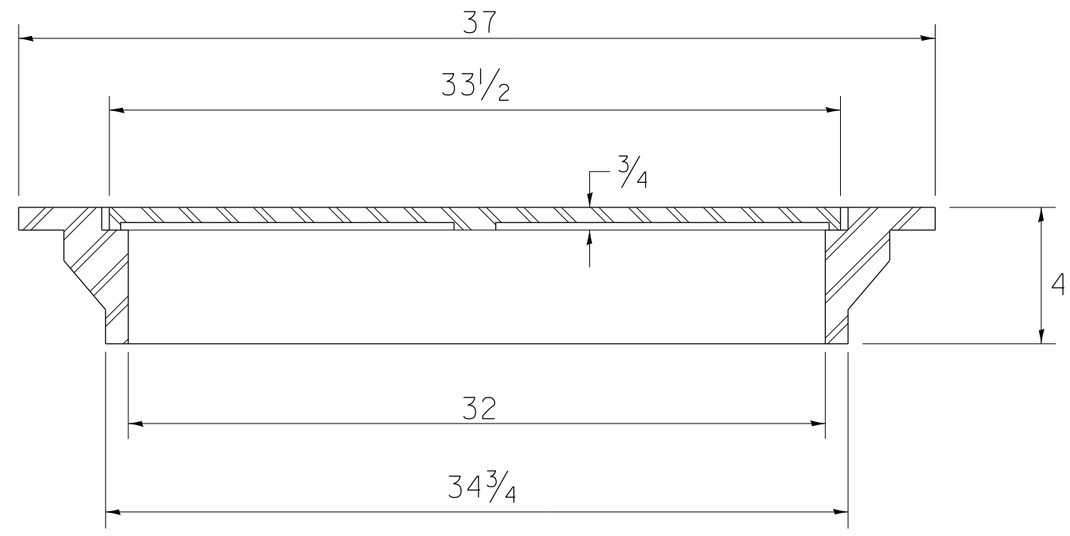

TOTAL WEIGHT: 280 LBS.

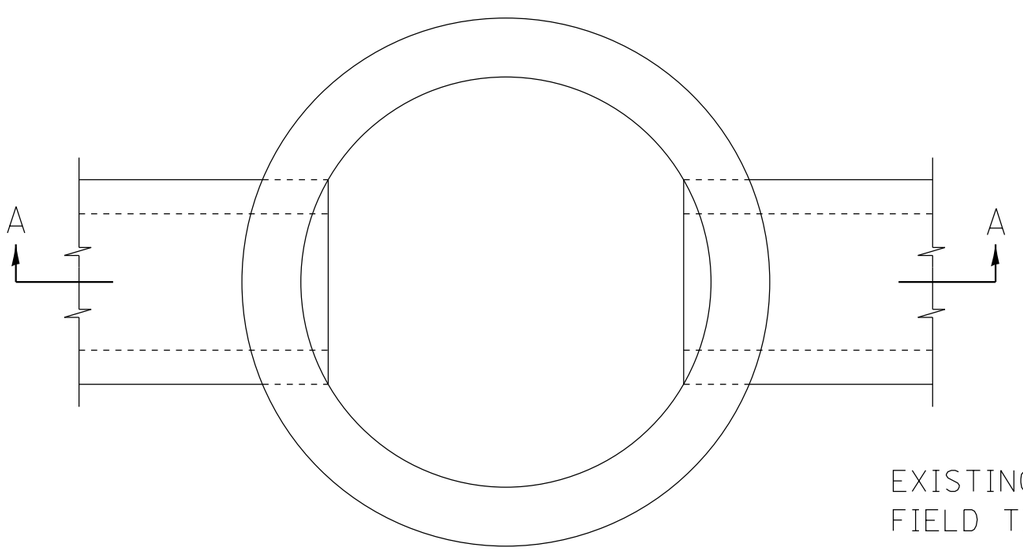

PLAN

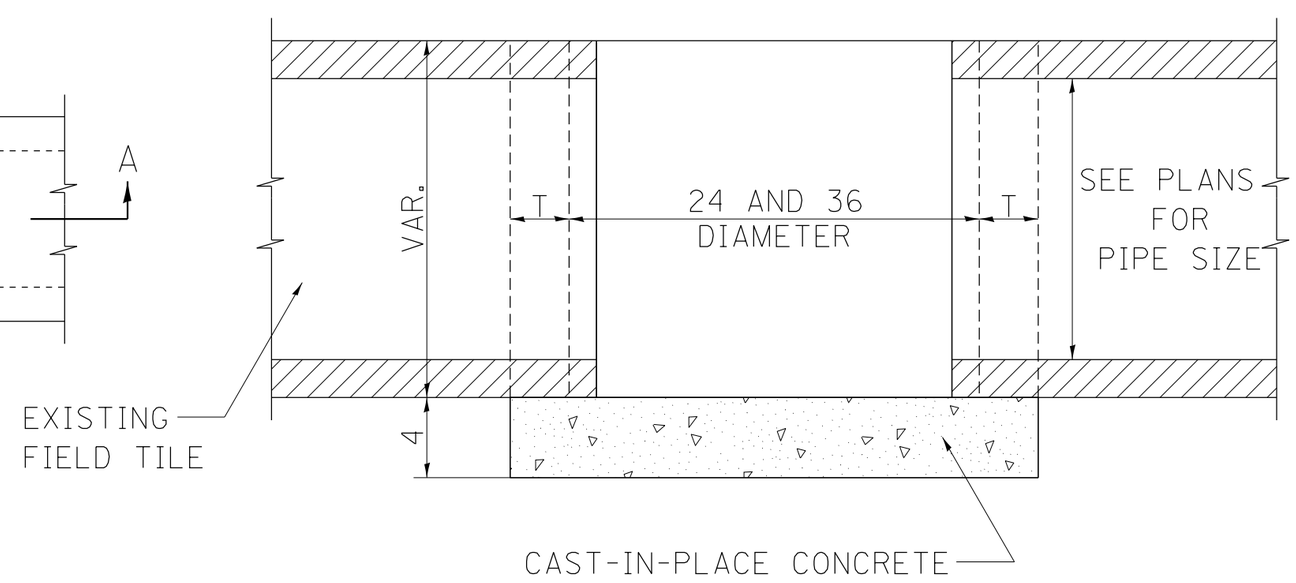

SECTION A-A

ALTERNATE MATERIALS FOR WALLS	T
BRICK MASONRY	8
CAST-IN-PLACE CONCRETE	6
CONCRETE MASONRY UNIT	5
PRECAST REINFORCED CONCRETE SECTION	3

NOTE: THE FRAME AND LID IS REQUIRED ON ALL JUNCTION VAULTS.

ALL DIMENSIONS ARE IN INCHES UNLESS OTHERWISE NOTED.

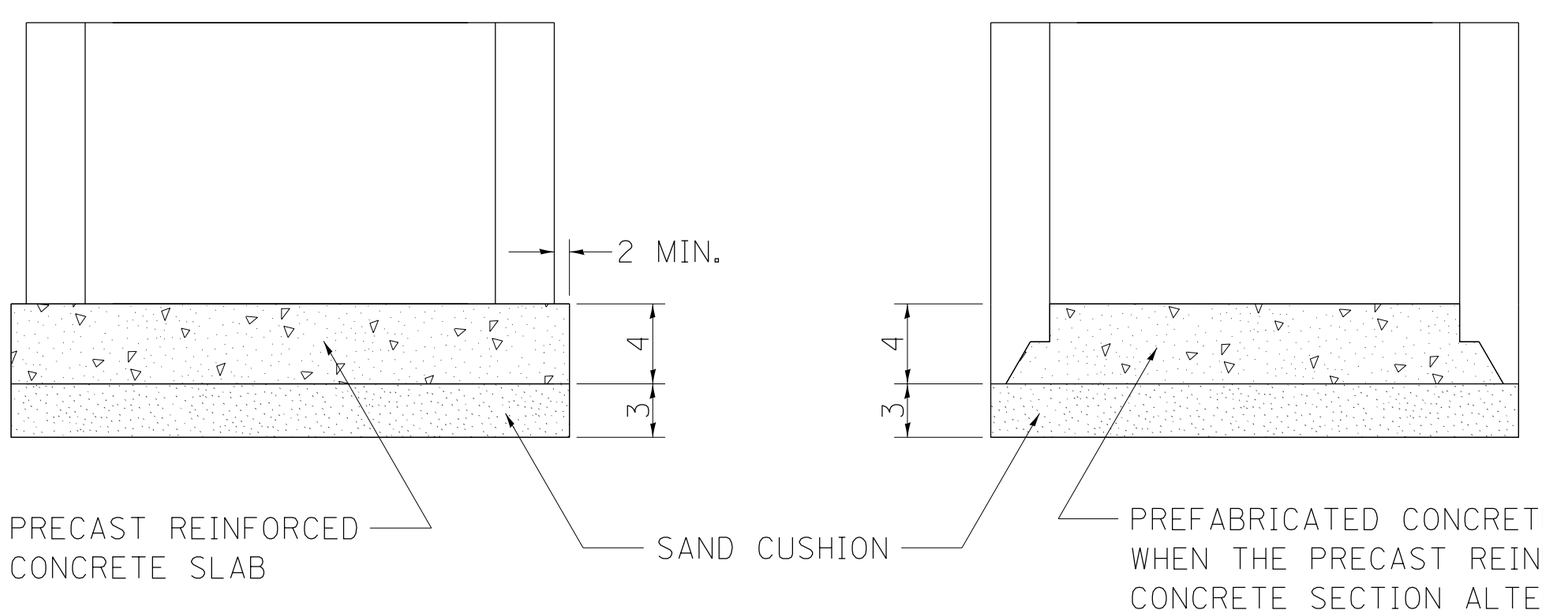

ALTERNATE METHODS

REVISED - 6-27-14	REGION 2 / DISTRICT 2 STANDARD	F.A. RTE.	SECTION	COUNTY	TOTAL SHEETS / SHEET NO.
REVISED - 10-14-11					
REVISED -				CONTRACT NO.	
REVISED -	SCALE: 1.0000 ' / in. / SHEET NO. OF SHEETS / STA. TO STA.	FED. ROAD DIST. NO.	ILLINOIS	FED. AID PROJECT	

PLOT DATE = Thu Nov 13 11:30:16 2014

TREATMENT OF FIELD TILE SYSTEMS UNDER DITCHES

PAVED DITCH

TO BE USED IF COVER OVER THE PIPE AT THE BOTTOM OF THE DITCH IS LESS THAN 10 inches

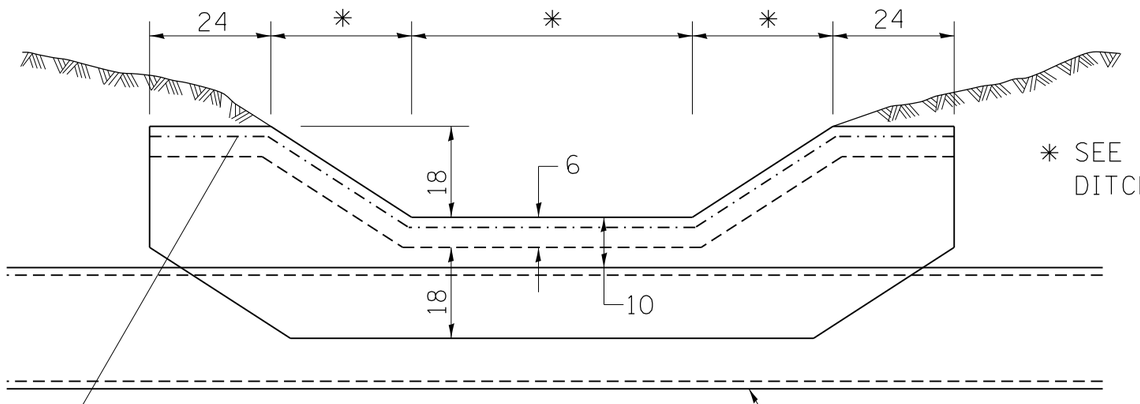

* SEE PLANS FOR DITCH CONFIGURATION

WELDED WIRE FABRIC WEIGHING NOT LESS THAN 58 lbs./100 sq. ft.

SIDE VIEW

STORM SEWER OR FIELD TILE

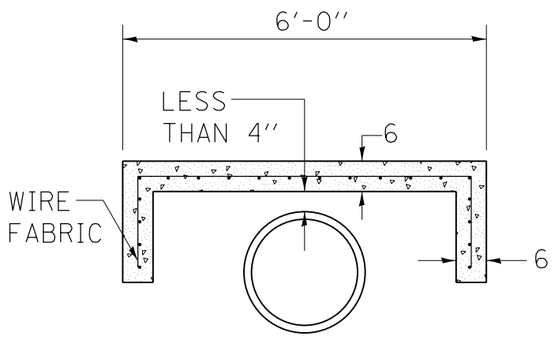

SECTION A-A

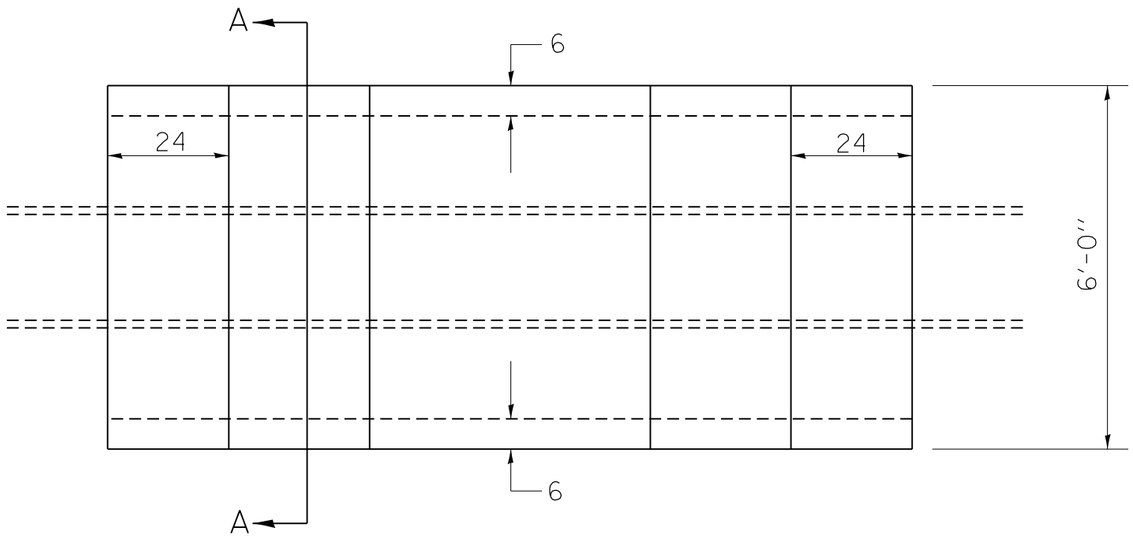

PLAN VIEW

CONCRETE SLAB

TO BE USED IF COVER OVER THE PIPE AT THE BOTTOM OF THE DITCH IS 10 INCHES TO 24 INCHES

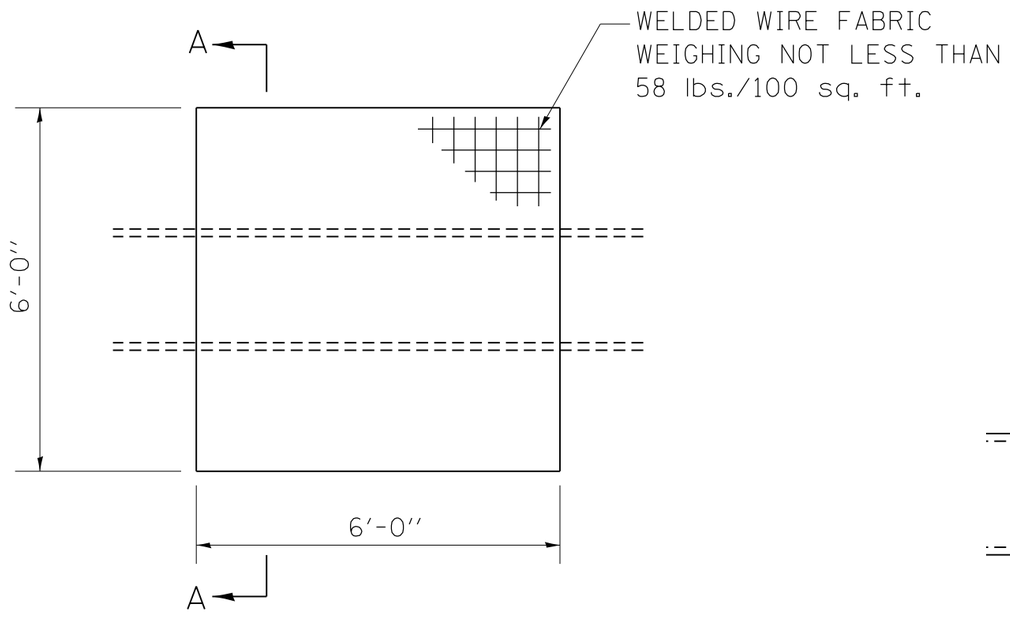

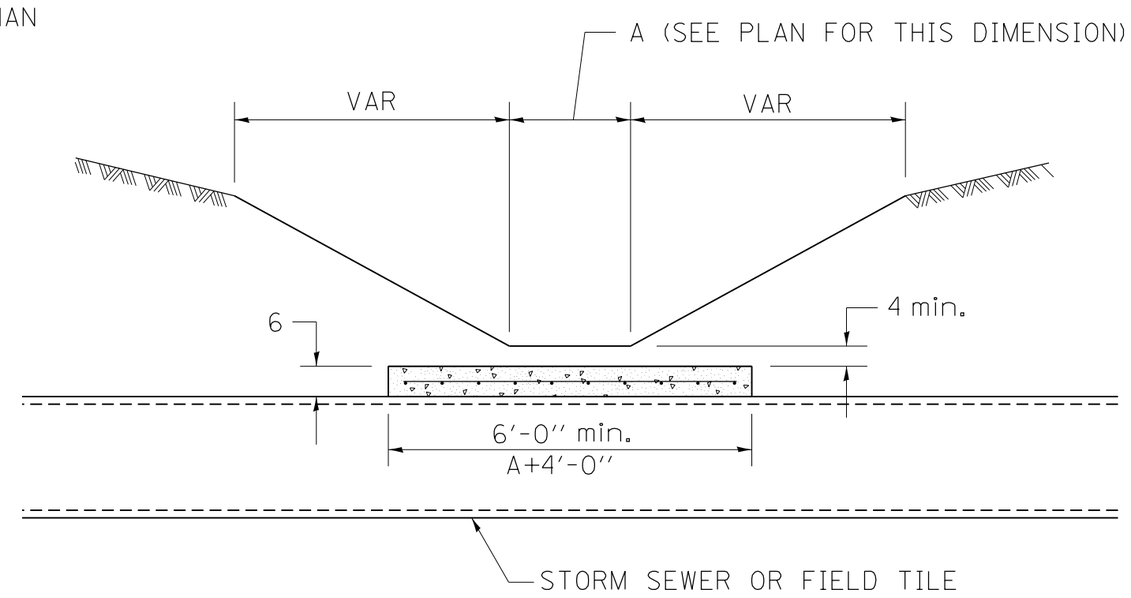

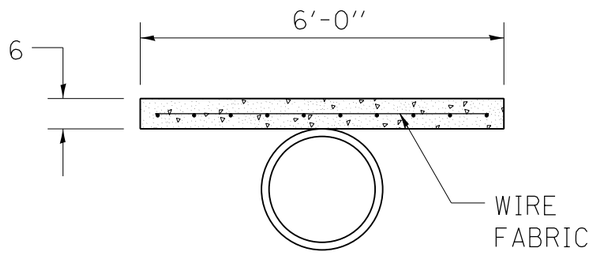

SECTION A-A

NOTES

THIS WORK SHALL BE DONE IN ACCORDANCE WITH ARTICLE 611.04 OF THE STANDARD SPECIFICATION.
THE CONCRETE SLAB AND PAVED DITCH WILL BE PAID FOR AT THE CONCRETE UNIT PRICE PER CUBIC YARD FOR MISCELLANEOUS CONCRETE.

ALL DIMENSIONS ARE IN INCHES UNLESS OTHERWISE NOTED.

REVISED - 10-14-11	REGION 2 / DISTRICT 2 STANDARD			F.A. RTE.	SECTION	COUNTY	TOTAL SHEETS / SHEET NO.
REVISED -							
REVISED -						CONTRACT NO.	
REVISED -	SCALE: 1.0000 '/ in.	SHEET NO. OF SHEETS	STA. TO STA.	FED. ROAD DIST. NO.	ILLINOIS	FED. AID PROJECT	

PLOT DATE = Thu Nov 13 11:30:17 2014

SIGN PANEL – TYPE 1 (SPECIAL)

SIGN LAY OUT FOR NARROW BRIDGES ON TWO-WAY ROADWAYS

(WHERE THE BRIDGE IS LESS THAN 24 WIDER THAN THE ROADWAY SURFACE.)

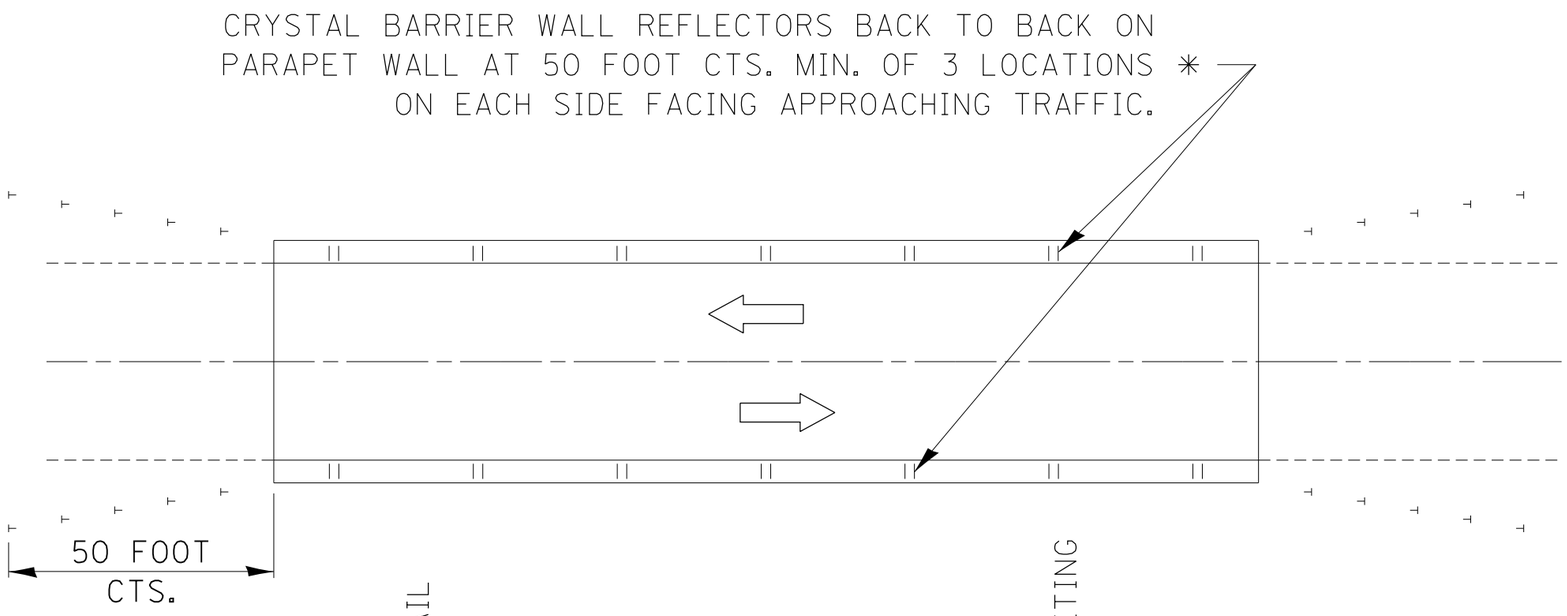

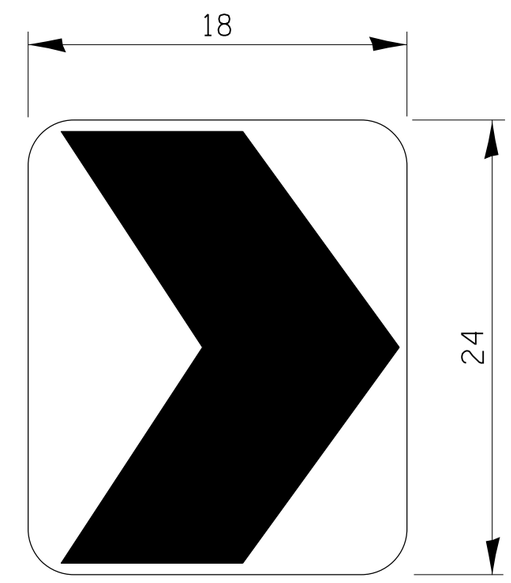

TYPICAL CHEVRON

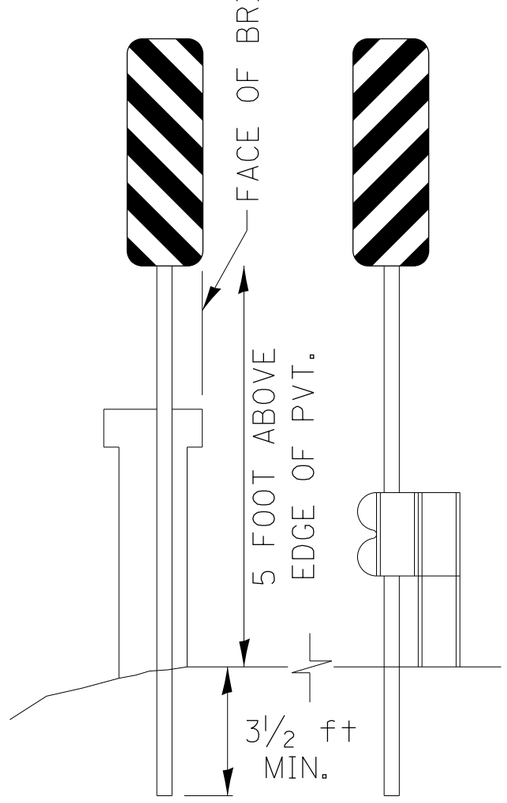

FRONT VIEW

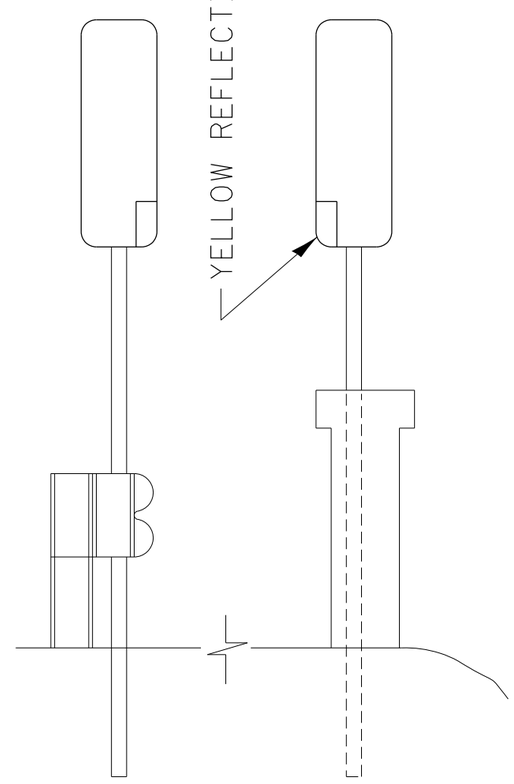

BACK VIEW

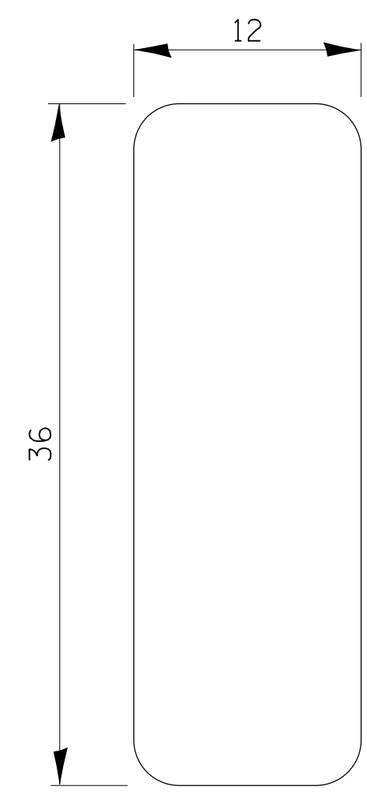

TYPICAL SIGN

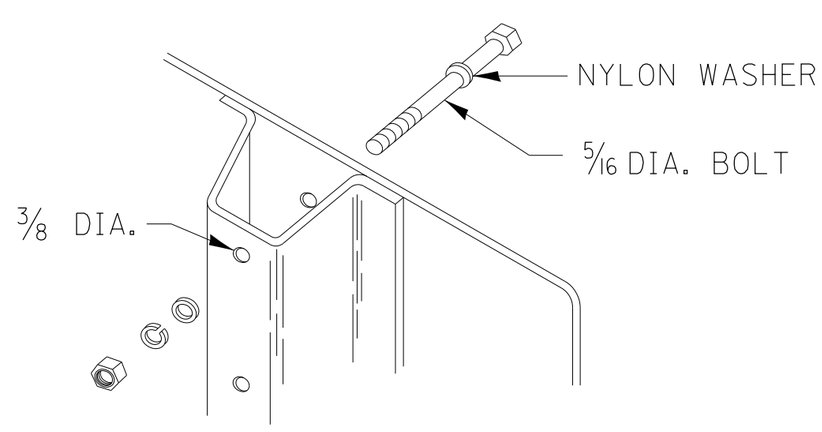

NOTE: MINIMUM OF TWO BOLTS PER POST REQUIRED.

DETAIL OF MOUNTING SIGN TO POST

NOTES

STRIPES ON THE FACE OF THE SIGN SHALL SLOPE TOWARDS THE EDGE OF PAVEMENT ON BOTH SIDES OF THE ROADWAY.

WHEN THE GUARDRAIL IS PRESENT THE DISTANCE FROM THE EDGE OF THE SIGN SHALL BE POSITIONED WITH THE FACE OF THE GUARDRAIL, AS SHOWN.

ALL MOUNTING HARDWEAR SHALL BE ALUMINUM, STAINLESS STEEL, OR ZINC OR CADMIUM PLATED STEEL AND SHALL BE INCLUDED TO THE COST OF THE INSALLATION.

PLACEMENT OF CHEVRON ALIGNMENT SIGNS ALONG THE 25 TO 1 TAPER WILL CONFORM TO THE DEPARTMENT OF TRANSPORTATION'S STANDARDS MANUAL UNDER THE SECTION FOR GUARDRAIL PLACEMENT.

ALL LEFT SIDE MARKERS SHALL BE OMITTED FOR FOUR-LANE, TWO-WAY BRIDGE APPLICATIONS.

* REFER TO THE BUREAU OF TRAFFIC'S SPECIFICATIONS.

ALL DIMENSIONS ARE IN INCHES UNLESS OTHERWISE NOTED.

PLOT DATE = Thu Nov 13 11:30:18 2014

REVISED - 6-27-14	REGION 2 / DISTRICT 2 STANDARD				F.A. RTE.	SECTION	COUNTY	TOTAL SHEETS	SHEET NO.
REVISED - 10-14-11									
REVISED -							CONTRACT NO.		
REVISED -	SCALE: 1.0000 ' / in.	SHEET NO. OF SHEETS	STA.	TO STA.	FED. ROAD DIST. NO.	ILLINOIS	FED. AID PROJECT		

SPECIAL DRAINAGE OUTLET

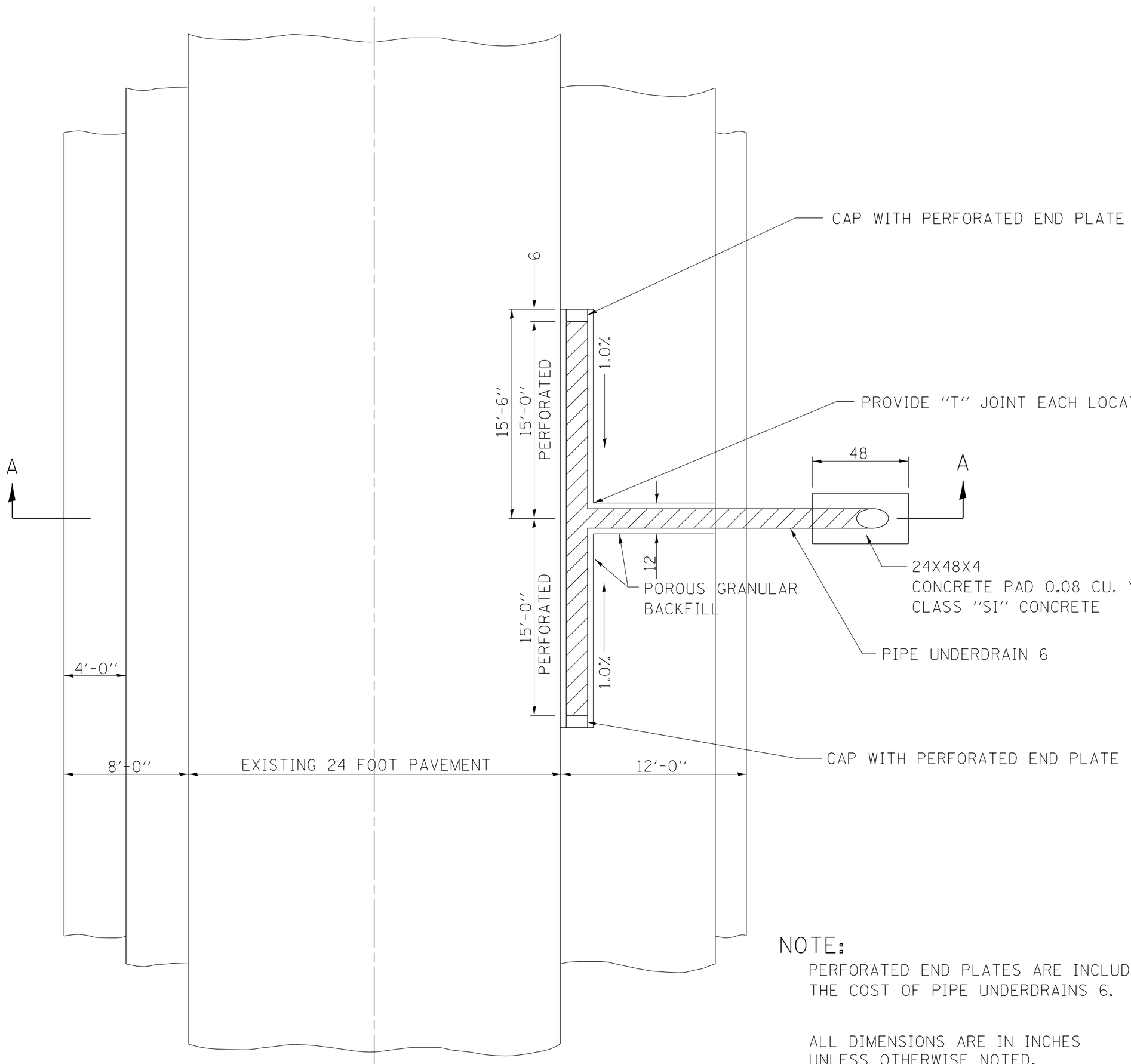

NOTE:

PERFORATED END PLATES ARE INCLUDED IN THE COST OF PIPE UNDERDRAINS 6.

ALL DIMENSIONS ARE IN INCHES UNLESS OTHERWISE NOTED.

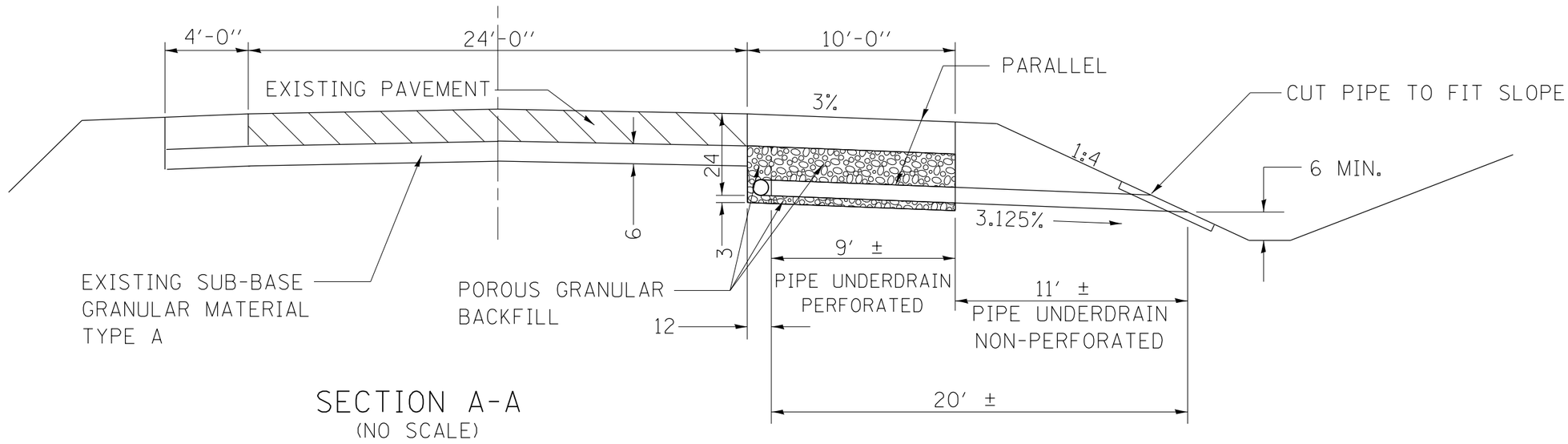

SECTION A-A
(NO SCALE)

REVISED - 10-14-11	REGION 2 / DISTRICT 2 STANDARD				F.A. RTE.	SECTION	COUNTY	TOTAL SHEETS	SHEET NO.
REVISED -									
REVISED -							CONTRACT NO.		
REVISED -	SCALE: 1.0000 ' / in.	SHEET NO. OF SHEETS	STA.	TO STA.	FED. ROAD DIST. NO.	ILLINOIS	FED. AID PROJECT		

PLOT DATE = Thu Nov 13 11:30:18 2014

INLET STAND PIPE

Inlet Stand Pipe

Inlet Stand Pipe shall be included in the contract unit price per FOOT for STORM SEWERS (SPECIAL) 6". Which shall include the following items--one 36" above ground section with 1" holes, one variable depth below ground section with small holes, one 6" tee section, collars (if needed) and end caps (if needed) as directed by the engineer.

Storm Sewer shall be paid for at the contract unit price per foot for STORM SEWERS (SPECIAL) 6". According to Article 611.04.

Field Tile Junction Vault shall be constructed according to District Standard 30.2 and paid for at the contract unit price each for FIELD TILE JUNCTION VAULTS for size specified in the plans.

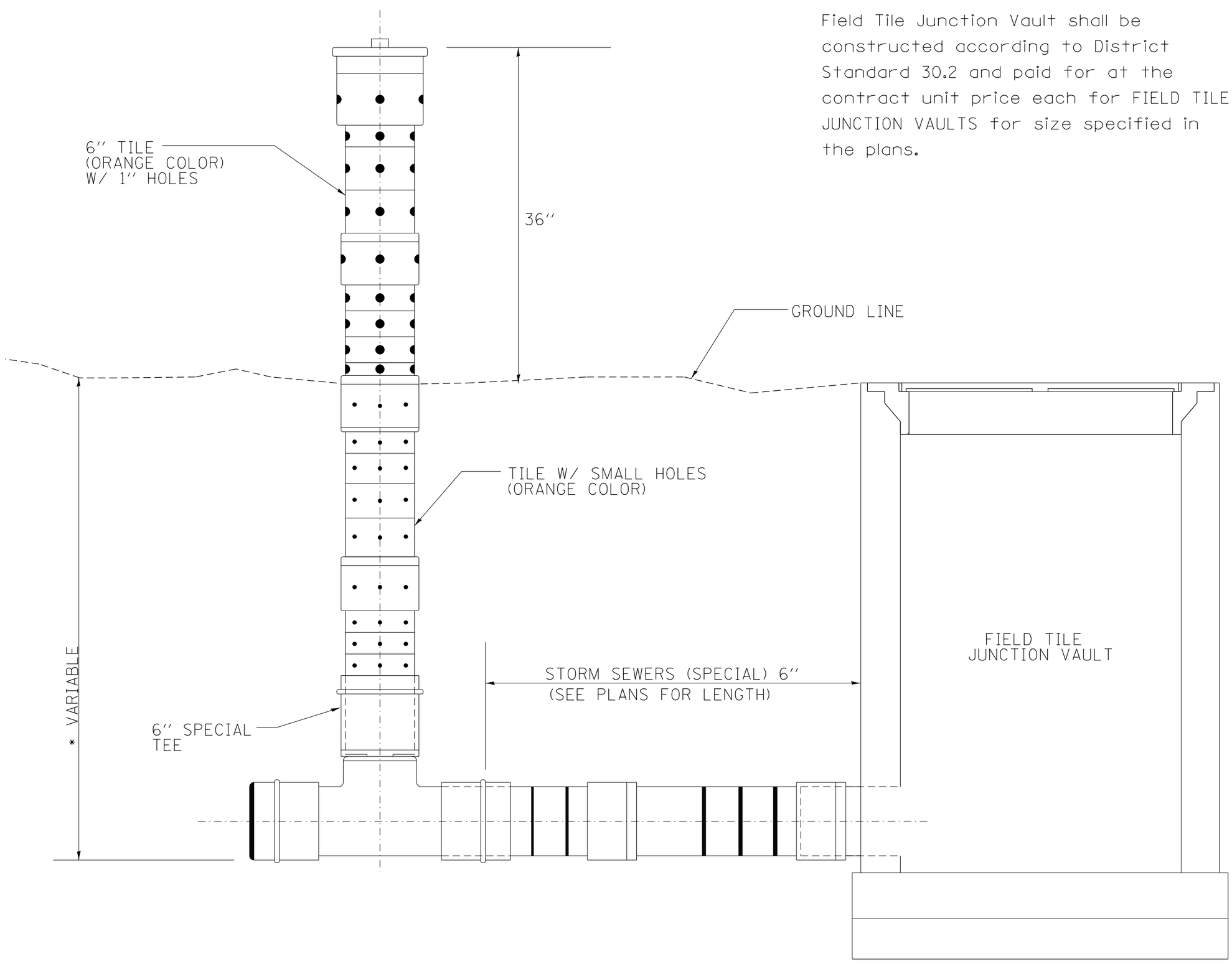

* VARIFY DEPTH IN FIELD

REVISED - 10-14-11	REGION 2 / DISTRICT 2 STANDARD				F.A. RTE.	SECTION	COUNTY	TOTAL SHEETS	SHEET NO.
REVISED -									
REVISED -							CONTRACT NO.		
REVISED -	SCALE: 1.0000 ' / in.	SHEET NO.	OF	SHEETS	STA.	TO STA.	FED. ROAD DIST. NO.	ILLINOIS	FED. AID PROJECT

PLOT DATE = Thu Nov 13 11:30:19 2014

INLET STAND PIPE **34.2**

GUARDRAIL EROSION CONTROL TREATMENTS

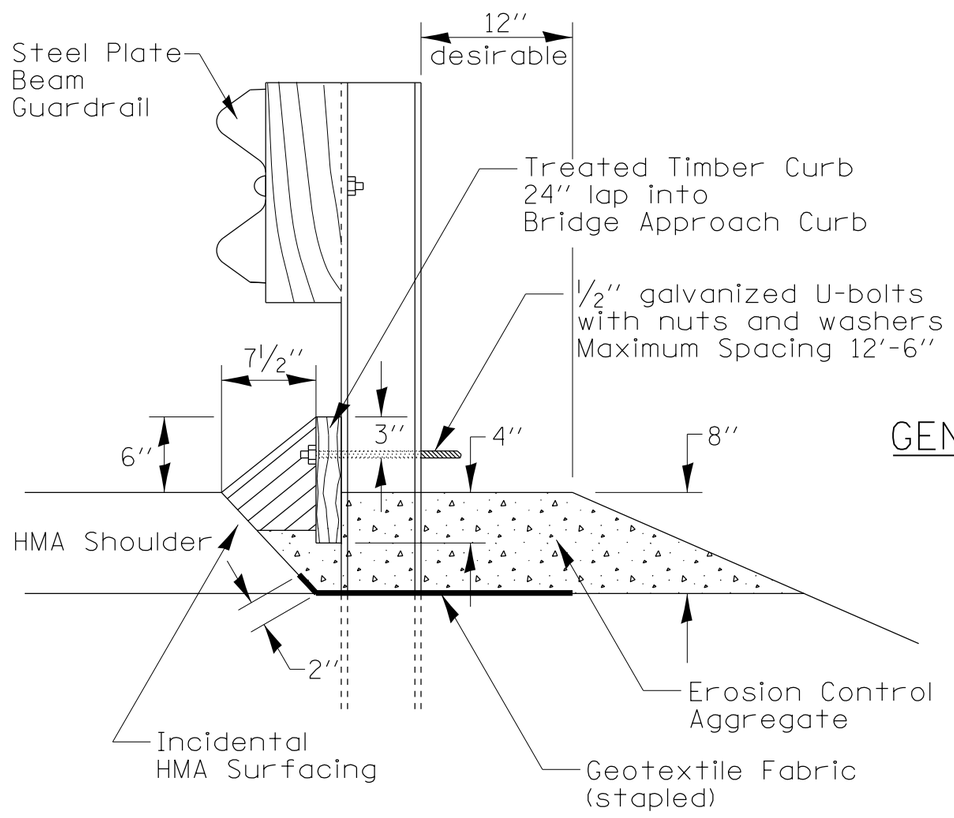

TYPICAL SECTION
WITH EROSION CONTROL CURB

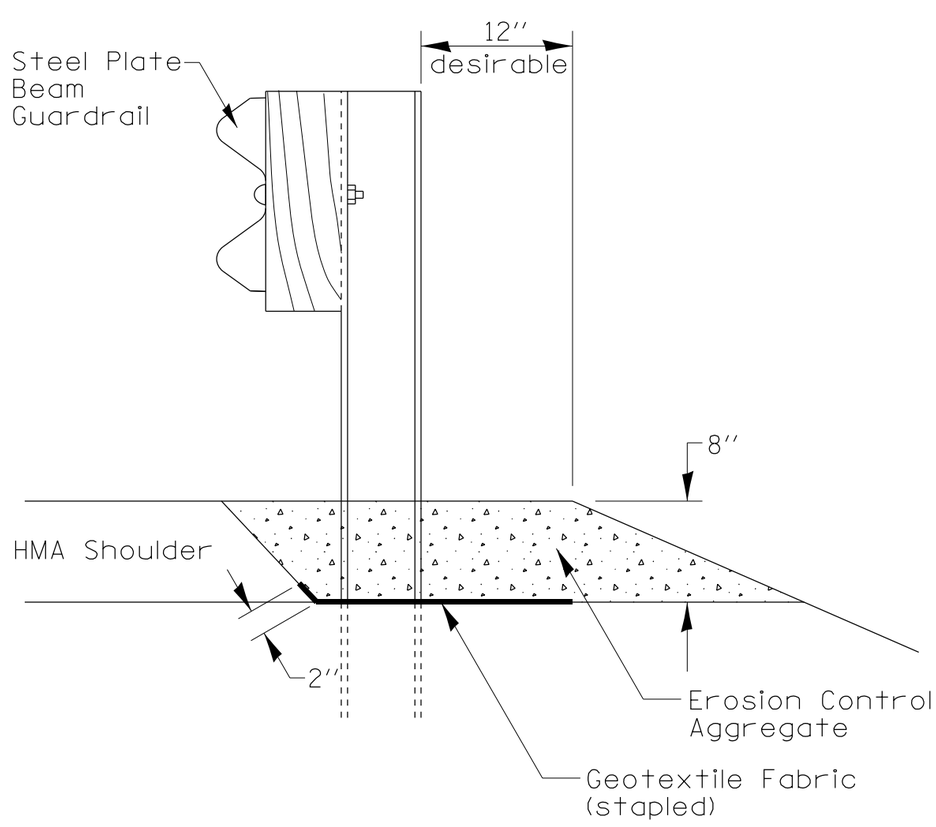

TYPICAL SECTION
WITHOUT EROSION CONTROL CURB

GENERAL NOTES: EROSION CONTROL CURB

1. This work shall consist of grading as needed, installing hardware, 2'' x 10'' treated timber boards and incidental hot-mix asphalt surfacing in front of steel plate beam guardrail in accordance with plan details.

2. Timber shall be treated in accordance with Article 1007.12 Waterborne preservatives "asa" and "cca" shall have a minimum retention of 0.40 lbs./cu.ft.

3. This work will be paid for at the contract unit price per foot for EROSION CONTROL CURB (pay code Z0020800).

GENERAL NOTES: GUARDRAIL AGGREGATE EROSION CONTROL

1. This work shall consist of furnishing and installing, Geotextile Fabric and staples, and furnishing, placing and shaping crushed aggregate around and behind Steel Plate Beam Guardrail posts in accordance with Plan Details.

2. Before placing the aggregate and the Geotextile Fabric, weeds and grass shall be removed from the area to be covered.

3. After the area has been prepared, and in a dry condition, the Geotextile Fabric shall be placed with a 12'' minimum overlay. A knife cut for guardrail post installation is necessary.

4. The aggregate shall be deposited, compacted and shaped by either mechanical or hand methods, in a manner reasonably true to line and grade.

5. The Contractor shall have the option of placing the guardrail before or after the Geotextile Fabric and aggregate are in place. If the guardrail is placed after the Geotextile Fabric and aggregate, then any voids must be filled and the aggregate returned to line and grade.

6. Materials shall meet following requirements:

   A. The crushed aggregate shall be CA1 gradation in accordance with Article 1004.01 of the Standard Specifications.

   B. The aggregate shall meet class D quality requirements as outlined in Article 1004.01 of the Standard Specifications with the following exceptions:

      1) Revise the maximum allowable percentage of weighted average loss when the material is subjected to 5 cycles of the Sodium Sulfate Soundness Test from 25% as shown under class D of the quality chart in Article 1004.01 (b) of the Standard Specifications to 40%.

      2) Revise the maximum allowable percentage of wear as determined by the Los Angles Abrasion Method from 45% as shown under as shown under class D of the quality chart in Article 1004.01 (b) of the Standard Specifications to 65%.

      3) The sum of the percentage of weighted average loss when the material is subjected to 5 cycles of the Sodium Sulfate Soundness Test: and the percentage of wear as determined by the Los Angles Abrasion Method, shall not exceed 95%.

   C. The Geotextile Fabric shall be non woven fabric in accordance with Article 1080.02 of the Standard Specifications.

7. This work will be paid for at the contract unit price per ton for GUARDRAIL AGGREGATE EROSION CONTROL (pay code Z0001002).

PLOT DATE = Thu Nov 13 11:30:20 2014

REVISED - 10-14-11	REGION 2 / DISTRICT 2 STANDARD	F.A. RTE.	SECTION	COUNTY	TOTAL SHEETS	SHEET NO.
REVISED -						
REVISED -				CONTRACT NO.		
REVISED -	SCALE: 1.0000 '/ in. SHEET NO. OF SHEETS STA. TO STA.	FED. ROAD DIST. NO.	ILLINOIS	FED. AID PROJECT		

PAVED DITCH (SPECIAL)

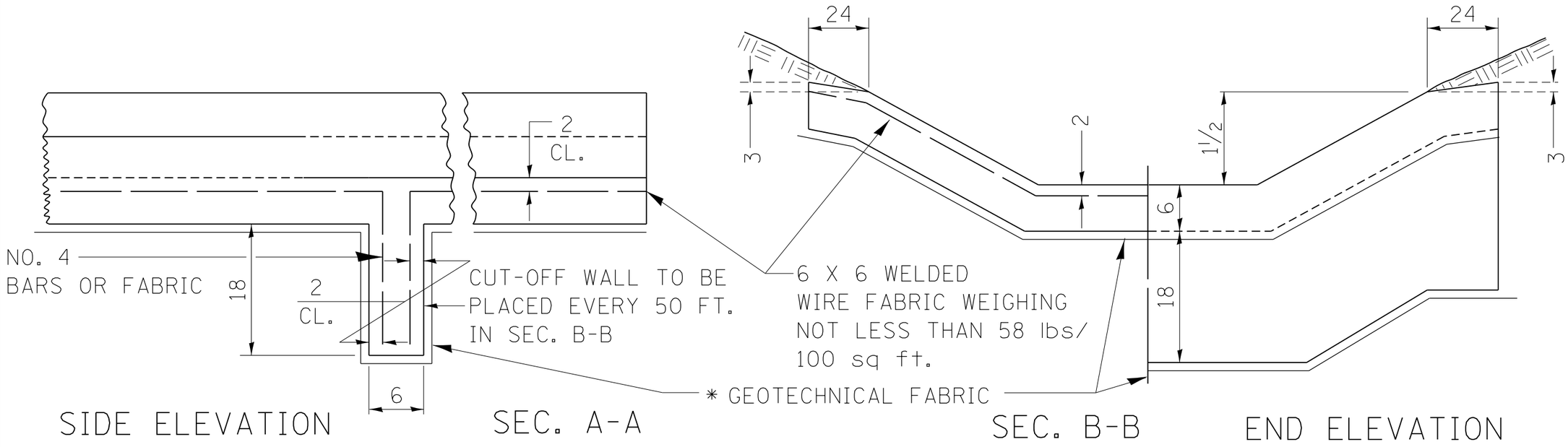

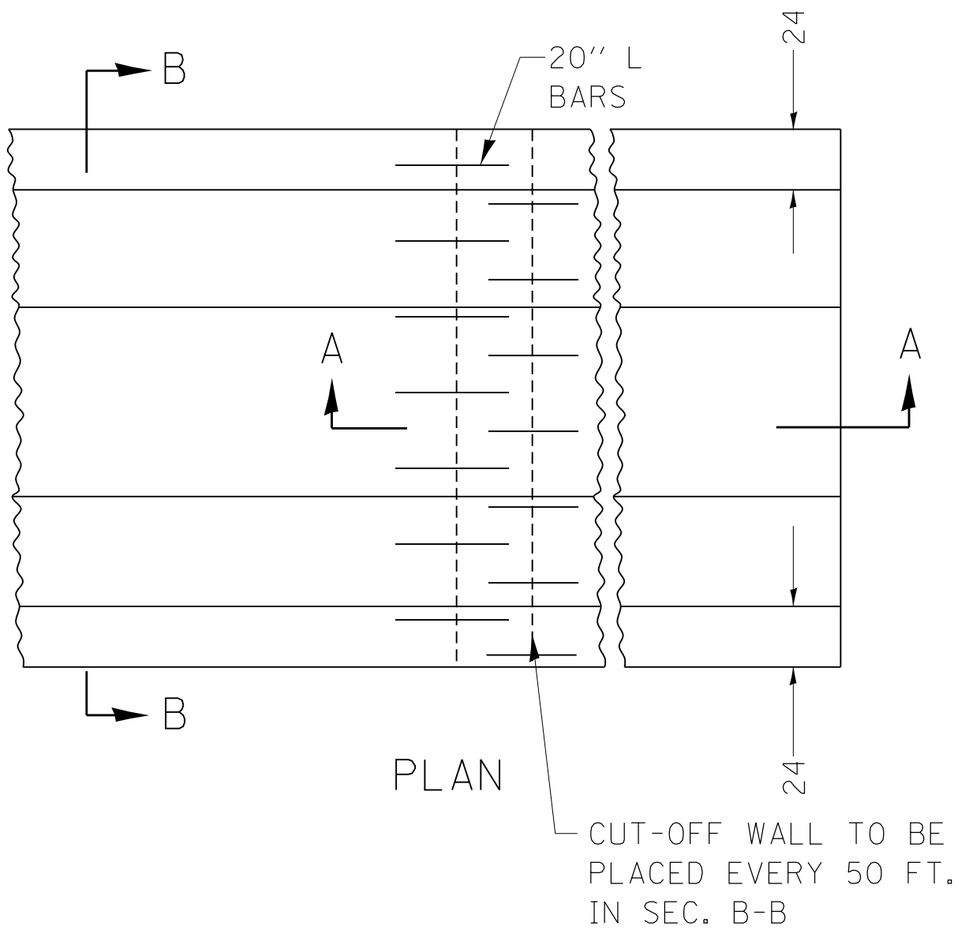

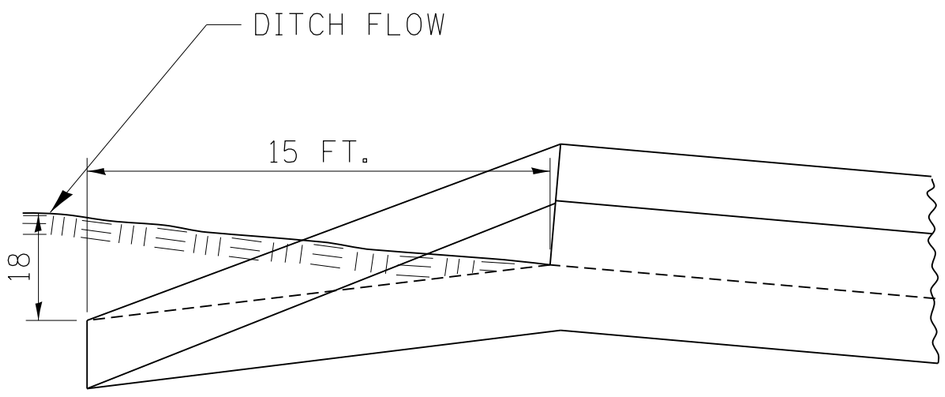

SIDE ELEVATION SHOWING METHOD OF BURYING UP STREAM AND DOWN STREAM END OF PAVED DITCH.

(SEE NOTE)

NOTES:

CLASS SI CONCRETE SHALL BE USED THROUGHOUT.

WELDED WIRE FABRIC SHALL BE 6 X 6 MESH, NO. 4 GAGE, 58 lbs/100 sq ft, CONFORMING TO THE REQUIREMENTS OF A.S.T.M. A185.

½" PREMOULDED JOINT FILLER SHALL BE PLACED AT THE JUNCTION OF PAVED DITCH WITH ANY OTHER STRUCTURE.

CUT-OFF WALLS SHALL BE COSTRUCTED MONOLITHICALLY WITH THE PAVED DITCH.

AT THE OPTION OF THE CONTRACTOR, NO. 4 L 20 REINFORCING BARS PLACED AT 12 CENTERS LONGITUDINALLY IN PAVED DITCH AND VERTICALLY IN CUT-OFF WALLS IN LIEU OF THE WELDED WIRE FABRIC.

THE SOIL PLACED OVER THE 24 FLATTENED SECTION OF THE DITCH SHALL BE TAMPED FIRMLY. THIS WORK SHALL BE INCLUDED IN THE UNIT PRICE FOR PAVED DITCH.

PAVED DITCH SHALL BE CONSTRUCTED IN ACCORDANCE WITH ARTICLES 606.01 THROUGH 606.13.

ALL DIMENSIONS ARE IN INCHES UNLESS OTHERWISE NOTED.

* THE GEOTECHNICAL FABRIC IS INCLUDED IN THE PAVED DITCH.

BASIS OF PAYMENT

PAVED DITCH (SPECIAL) WILL BE PAID FOR AT THE CONTRACT UNIT PRICE PER FOOT MEASURED IN PLACE INCLUDING THE COST OF FURNISHING AND PLACING THE JOINT FILLER, THE WELDED WIRE FABRIC OR THE NO. 4 REINFORCING BARS, AND THE NECESSARY EXCAVATION AND DISPOSAL OF SURPLUS MATERIALS.

PLOT DATE = Thu Nov 13 11:30:20 2014

REVISED - 10-14-11	REGION 2 / DISTRICT 2 STANDARD				F.A. RTE.	SECTION	COUNTY	TOTAL SHEETS	SHEET NO.
REVISED -									
REVISED -							CONTRACT NO.		
REVISED -	SCALE: 1.0000 ' / in.	SHEET NO. OF SHEETS	STA.	TO STA.	FED. ROAD DIST. NO.	ILLINOIS	FED. AID PROJECT		

UNDERDRAIN FOR ACROSS ROAD (AR) CULVERTS

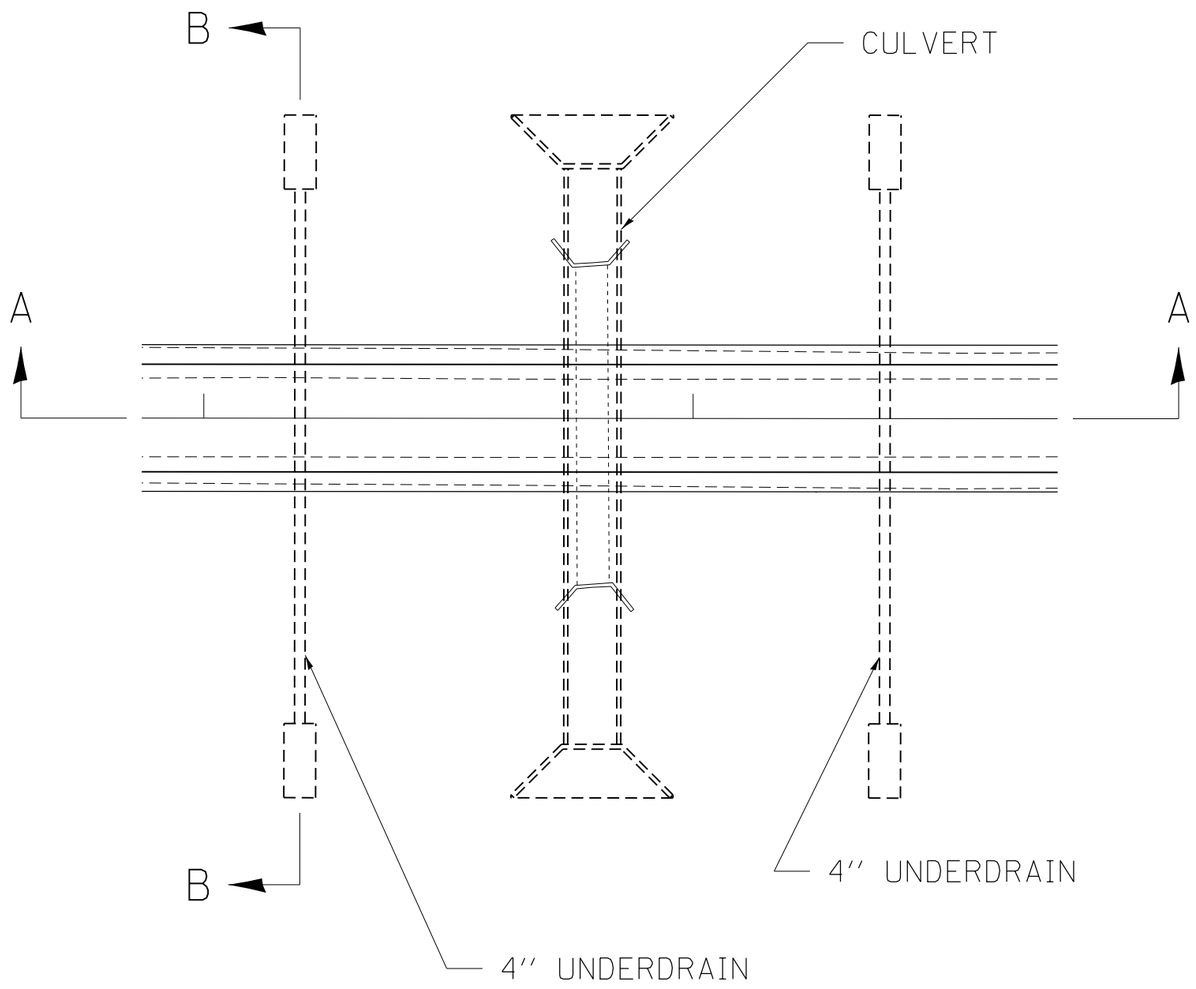

NOTES:

IN SAG CONDITIONS INSTALL PIPE UNDERDRAINS ON BOTH SIDES OF CULVERT.

ON HIGHWAY GRADES GREATER THAN 2% INSTALL PIPE UNDERDRAINS ON THE HIGH SIDE OF THE CULVERT.

THIS WORK SHALL BE COMPLETED ACCORDING TO SECTION 601 OF THE STANDARD SPECIFICATION.

THE UNDERDRAIN SHALL EXTEND UNTIL INTERSECTING WITH THE SIDE SLOPES. THE PIPES SHALL DRAIN INTO CONCRETE HEADWALLS. (SEE ARTICLE 601.05 OF THE STANDARD SPECIFICATIONS AND HIGHWAY STANDARDS 601101).

THE UNDERDRAIN SHALL BE A MINIMUM OF 12'' BELOW THE EXISTING PAVEMENT.

THE TRENCH FOR THE UNDERDRAIN SHALL BE BACKFILLED WITH CA11 OR CA16.

THE TRENCH SHALL BE WRAPPED USING A FABRIC ENVELOPE MEETING THE REQUIREMENTS OF ARTICLE 1080.05 OF THE STANDARD SPECIFICATIONS. FABRIC ENCASING THE PIPE SHALL BE ELIMINATED.

PIPE UNDERDRAINS WILL BE PAID FOR AT THE CONTRACT UNIT PRICE PER FOOT FOR PIPE UNDERDRAINS 4''.

CONCRETE HEADWALLS WILL BE PAID FOR AT THE CONTRACT UNIT PRICE PER EACH FOR CONCRETE HEADWALLS FOR PIPE DRAINS.

A DELINEATOR SHALL BE PLACED AT EACH CONCRETE HEADWALL. THESE BE PAID FOR AT THE CONTRACT UNIT PRICE PER EACH FOR DELINEATORS.

SEC. A-A

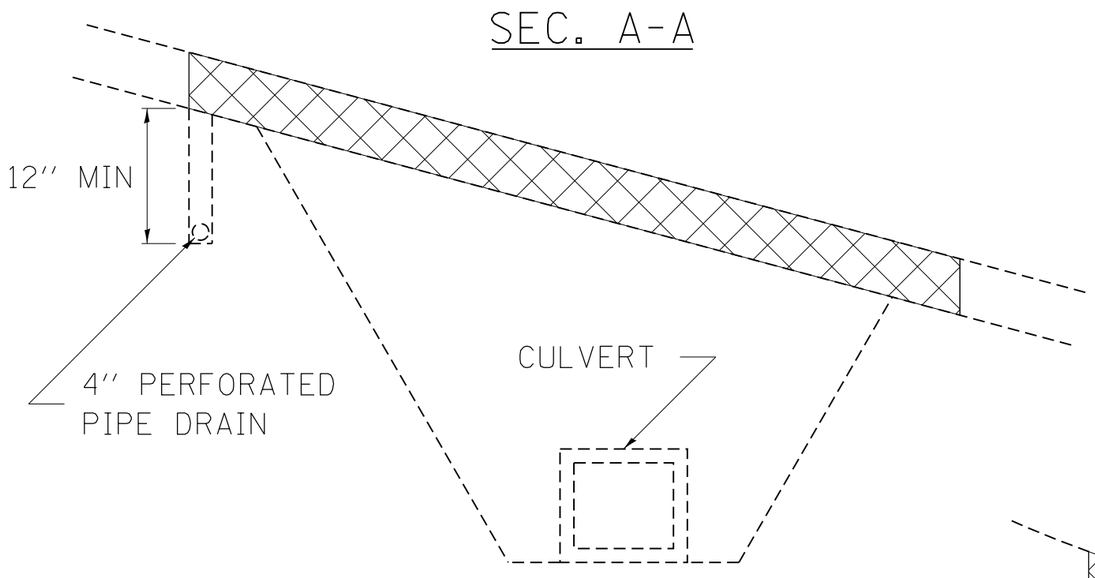

NOTES:

(HIGHWAY GRADE GREATER THAN 2%)

SEC. A-A

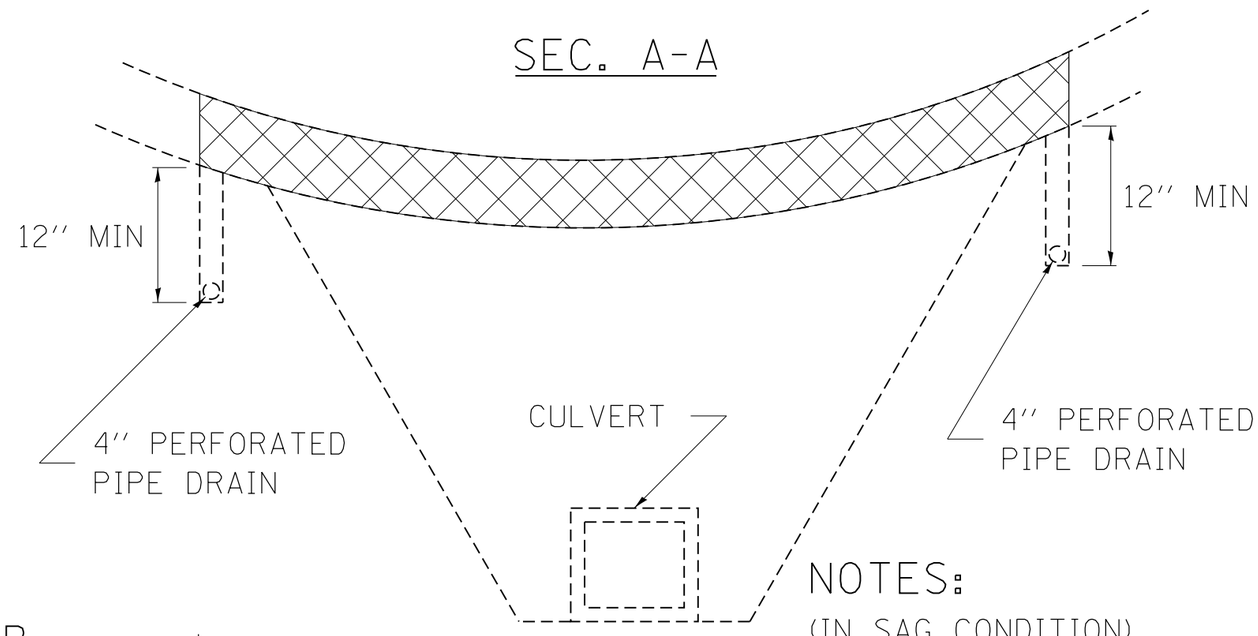

NOTES:

(IN SAG CONDITION)
(PIPE DRAIN ON EACH SIDE)

SEC. B-B

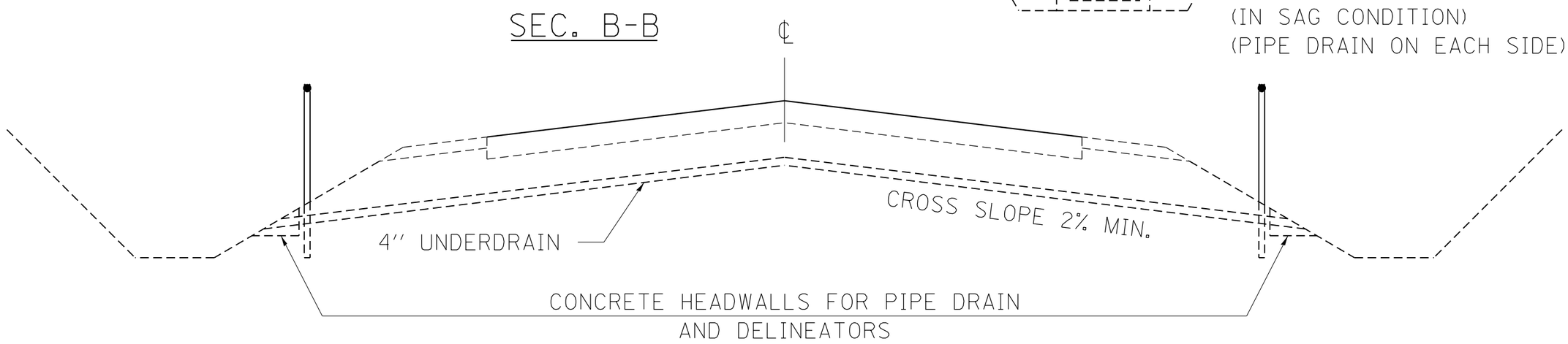

REVISED - 6-27-14	REGION 2 / DISTRICT 2 STANDARD				F.A. RTE.	SECTION	COUNTY	TOTAL SHEETS / SHEET NO.
REVISED - 7-05-12								
REVISED -							CONTRACT NO.	
REVISED -	SCALE: 1.0000 '/ in.	SHEET NO. OF SHEETS	STA.	TO STA.	FED. ROAD DIST. NO.	ILLINOIS	FED. AID PROJECT	

PLOT DATE = Thu Nov 13 11:30:21 2014

INFORMATIONAL WARNING SIGN (FOR NARROW TRAVEL LANES)

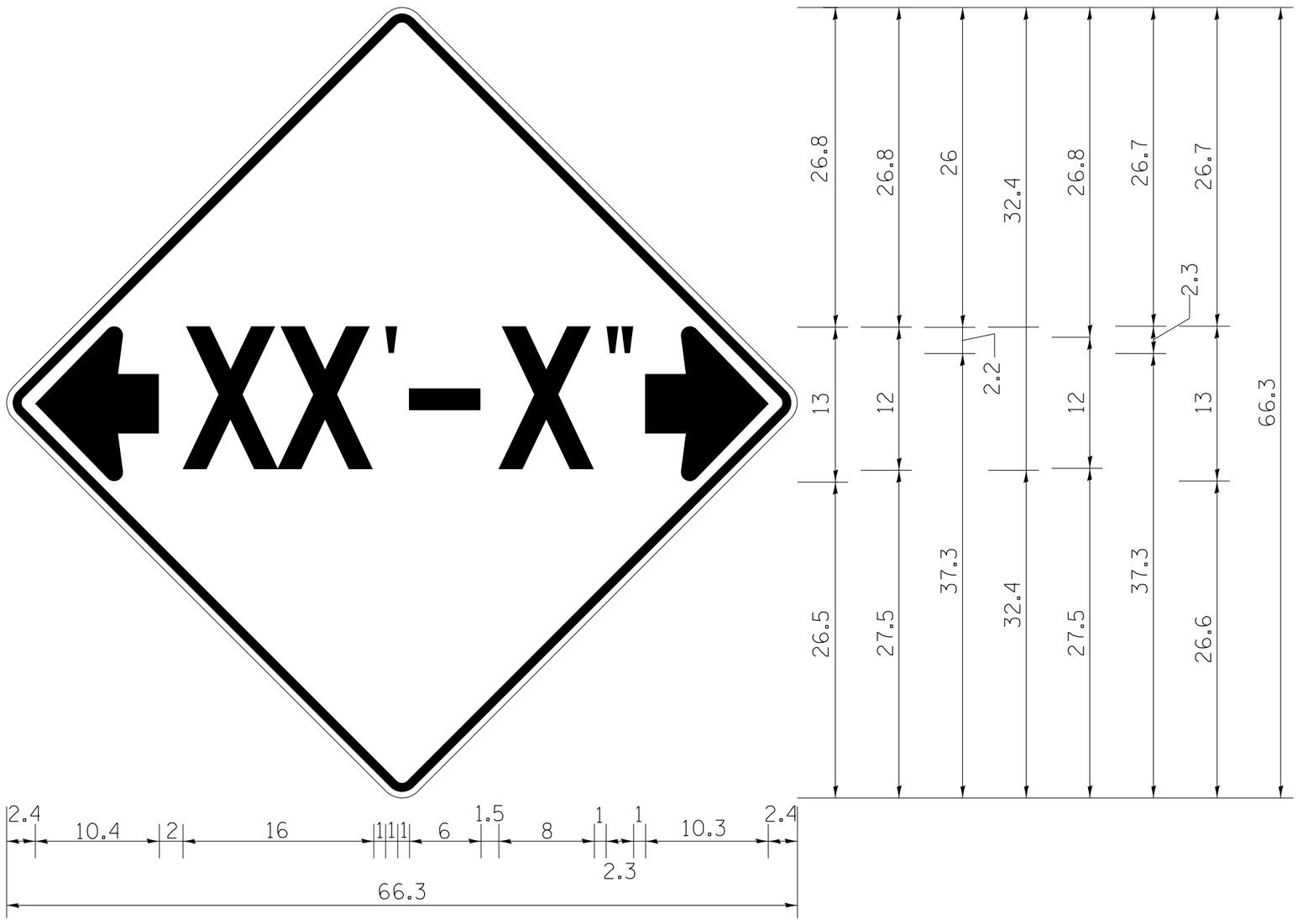

NOTES

W12-2 - Horizontal Clearance Sign 48.0'' across sides, 1.9'' Radius, 0.8'' Border, 0.5'' Indent, Black on Orange; Standard Arrow Custom 10.4'' X 8.1'' 180° Black 11 Inch D Series Lettering; Standard Arrow Custom 10.4'' X 8.1'' 0°

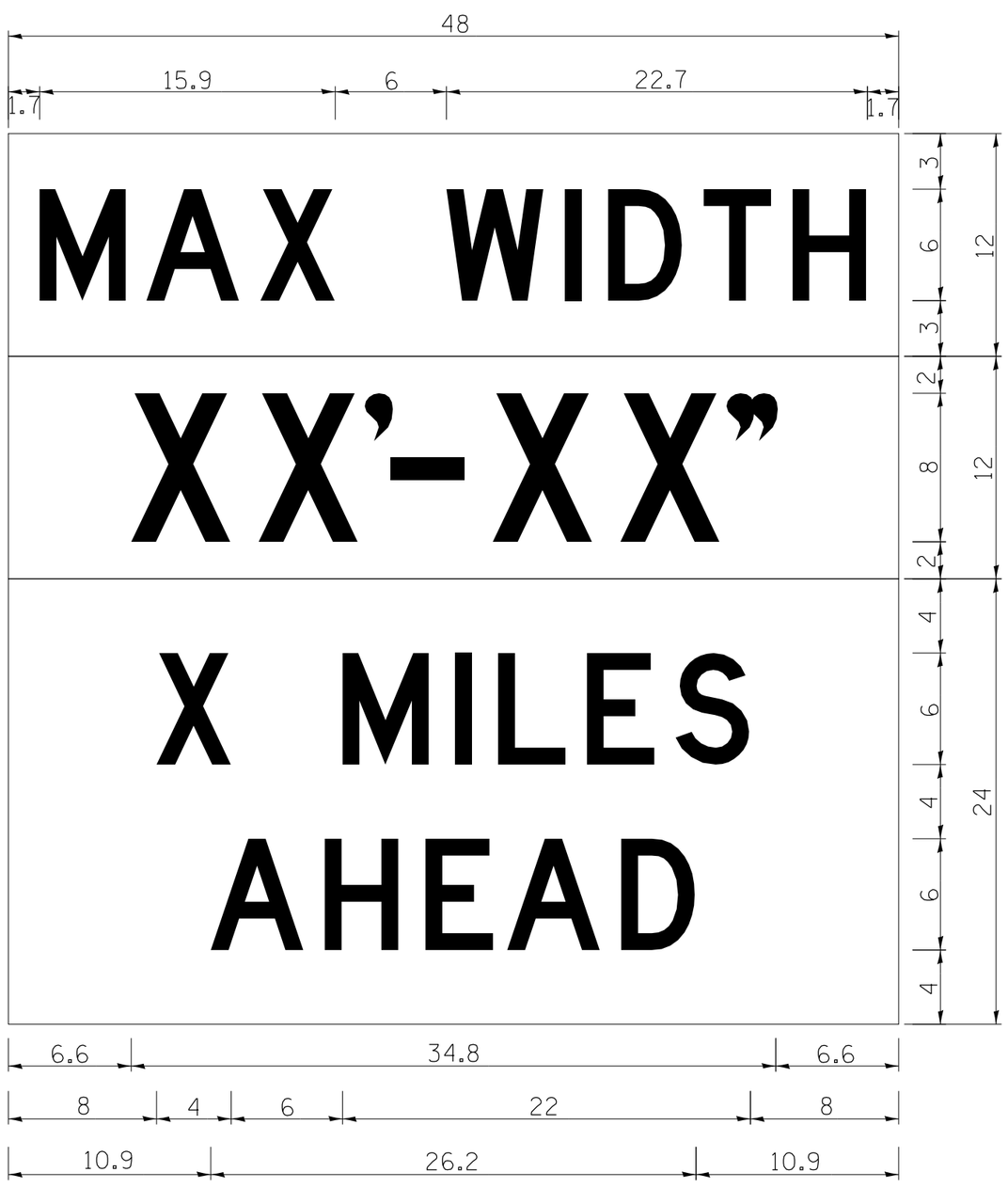

W12-I103 (Width is 8D); No border, Black on White; [MAX WIDTH] D;

No border, Black on Orange; [XX'-XX''] D;

No border, Black on White; [X MILES] D; [AHEAD] D;

All work to furnish and install these signs shall be included in the cost of the Traffic Control Standards and shall not be paid for separately.

ALL DIMENSIONS ARE IN INCHES UNLESS OTHERWISE NOTED.

PLOT DATE = Thu Nov 13 11:30:22 2014

REVISED - 5-15-09	REGION 2 / DISTRICT 2 STANDARD			F.A. RTE.	SECTION	COUNTY	TOTAL SHEETS / SHEET NO.
REVISED -							
REVISED -						CONTRACT NO.	
REVISED -	SCALE: 1.0000 ' / in.	SHEET NO. OF SHEETS	STA. TO STA.	FED. ROAD DIST. NO.	ILLINOIS	FED. AID PROJECT	

STAY IN YOUR LANE SIGN DETAILS

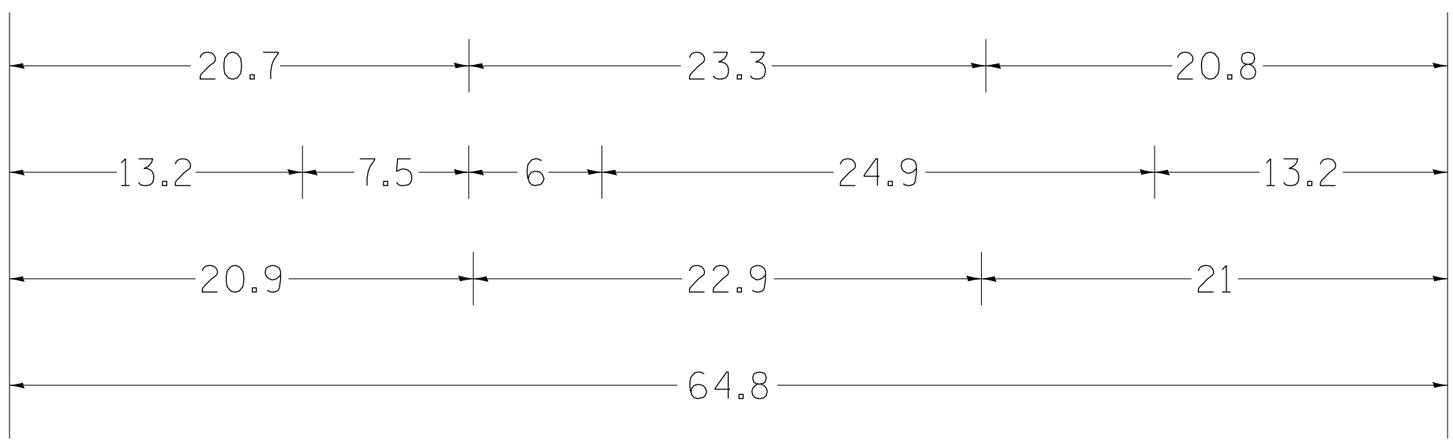

48.0'' across sides 3.8'' Radius, 1.0'' Border, 0.6'' Indent, Black on Orange
''STAY'' E Mod; ''IN YOUR'' E Mod; ''LANE'' E Mod;
Table of letter and object lefts.

S 20.7	T 26.8	A 31.6	Y 38.0

I 13.2	N 15.9	Y 26.7	O 33.9	U 40.5	R 46.8

L 20.9	A 25.8	N 33.1	E 39.4

PLOT DATE = Thu Nov 13 11:30:22 2014

REVISED - 4-04-11	REGION 2 / DISTRICT 2 STANDARD	F.A. RTE.	SECTION	COUNTY	TOTAL SHEETS	SHEET NO.
REVISED -						
REVISED -				CONTRACT NO.		
REVISED -	SCALE: 1.0000 '/ in. SHEET NO. OF SHEETS STA. TO STA.	FED. ROAD DIST. NO.	ILLINOIS	FED. AID PROJECT		

RESERVED PARKING SIGN DETAIL

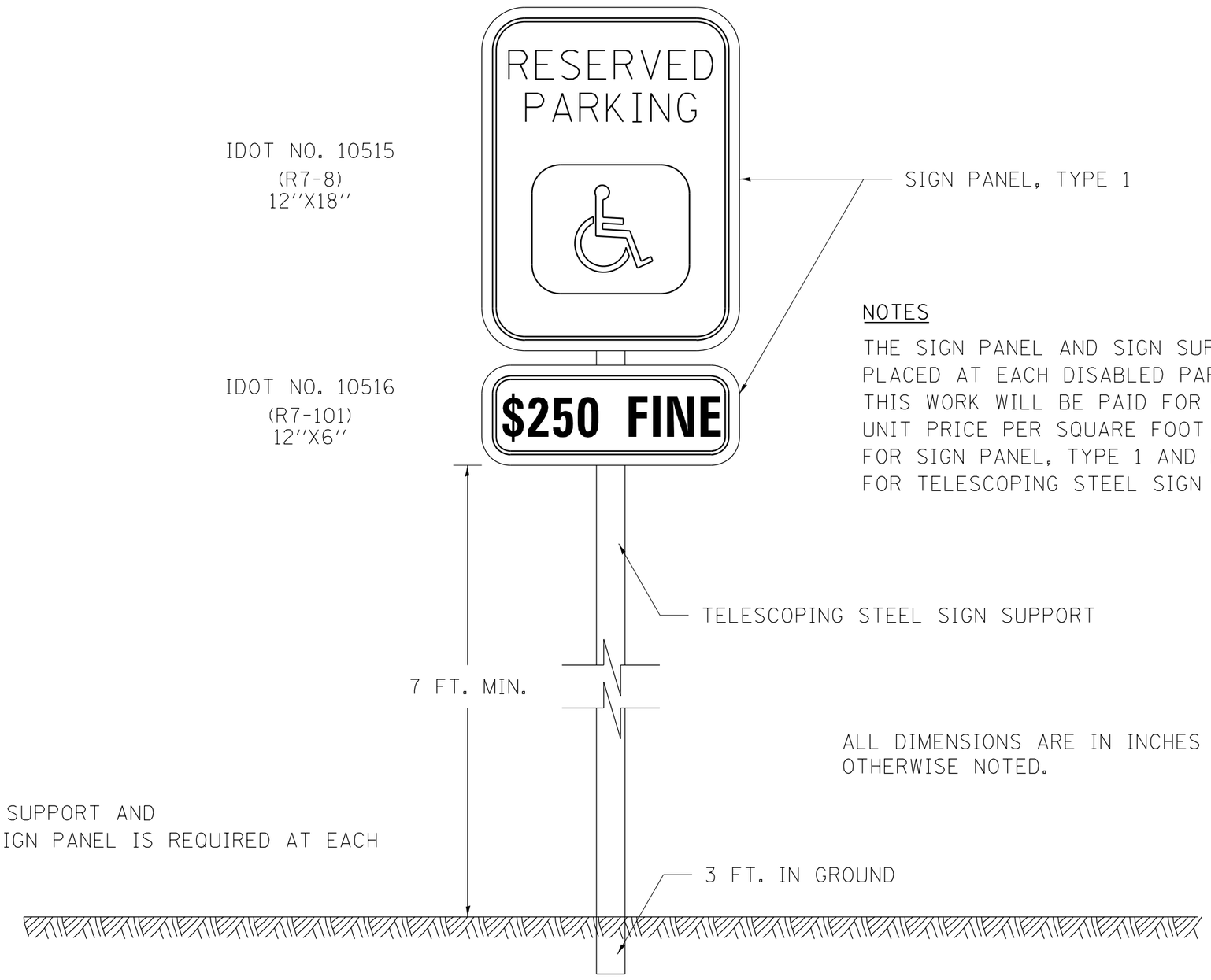

NOTES

THE SIGN PANEL AND SIGN SUPPORT SHALL BE PLACED AT EACH DISABLED PARKING STALL. THIS WORK WILL BE PAID FOR AT THE CONTRACT UNIT PRICE PER SQUARE FOOT FOR SIGN PANEL, TYPE 1 AND PER FOOT FOR TELESCOPING STEEL SIGN SUPPORT.

ALL DIMENSIONS ARE IN INCHES UNLESS OTHERWISE NOTED.

QUANTITIES

12 FT OF SIGN SUPPORT AND 2 SQ. FT. OF SIGN PANEL IS REQUIRED AT EACH LOCATION.

DISABLED PARKING STRIPING

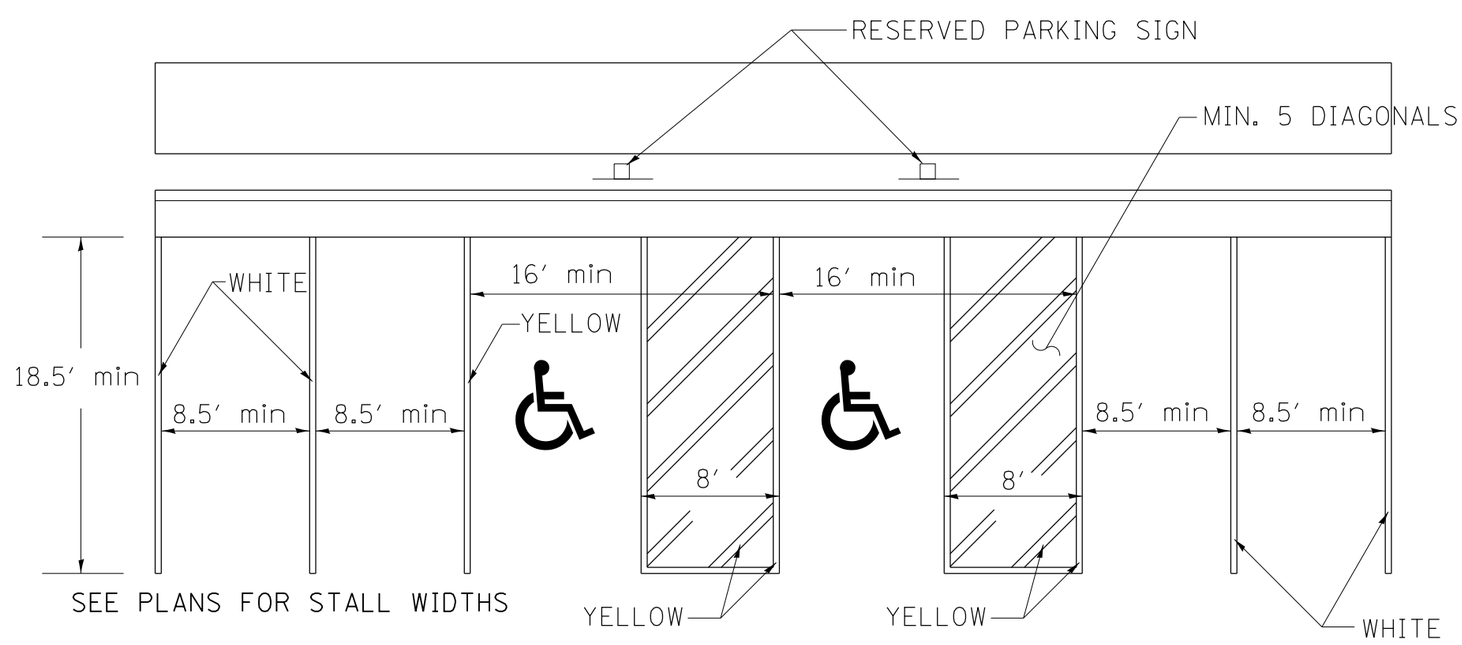

PARKING ANGLE = 90°

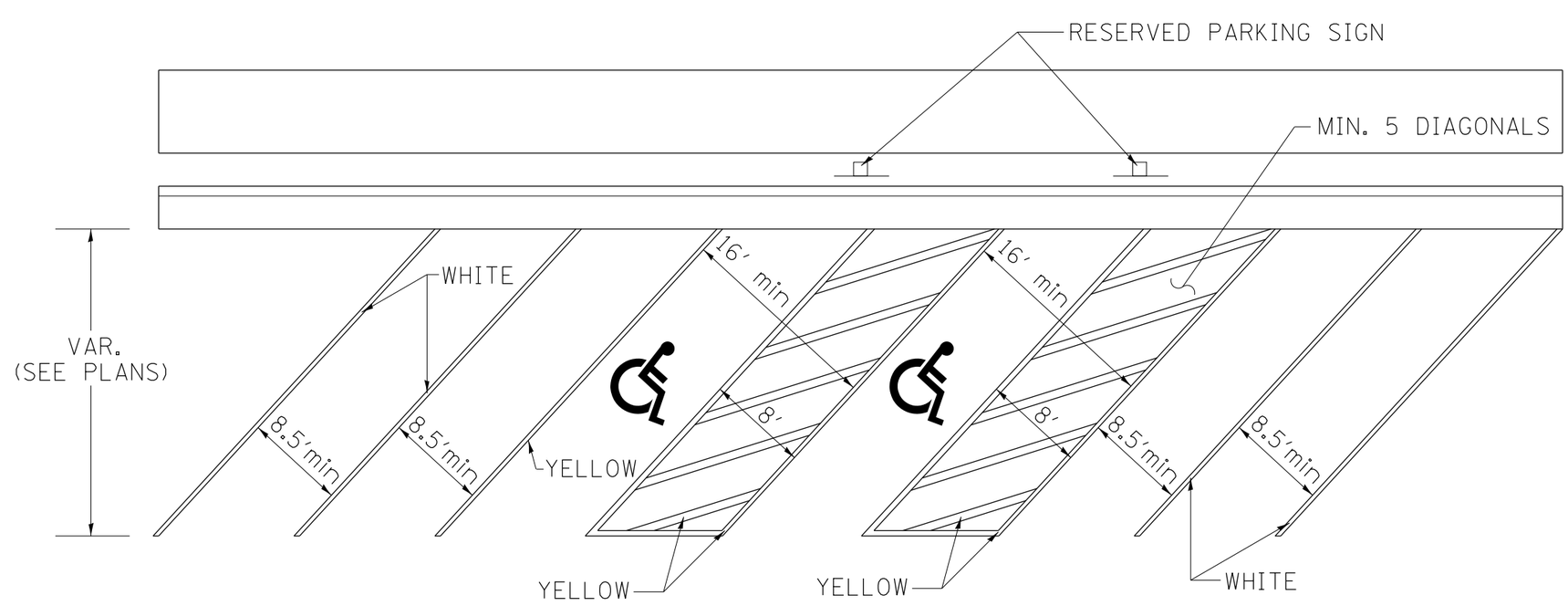

LESS THAN 90° PARKING ANGLE

REVISED - 6-27-14	REGION 2 / DISTRICT 2 STANDARD			F.A. RTE.	SECTION	COUNTY	TOTAL SHEETS / SHEET NO.
REVISED - 10-14-11							
REVISED -						CONTRACT NO.	
REVISED -	SCALE: 1.0000 '/ in.	SHEET NO. OF SHEETS	STA. TO STA.	FED. ROAD DIST. NO.	ILLINOIS	FED. AID PROJECT	

PLOT DATE = Thu Nov 13 11:30:23 2014

SUPERELEVATION TRANSITION ON TWO–LANE HIGHWAY

W = LANE WIDTH
e = DESIGN SUPERELEVATION RATE

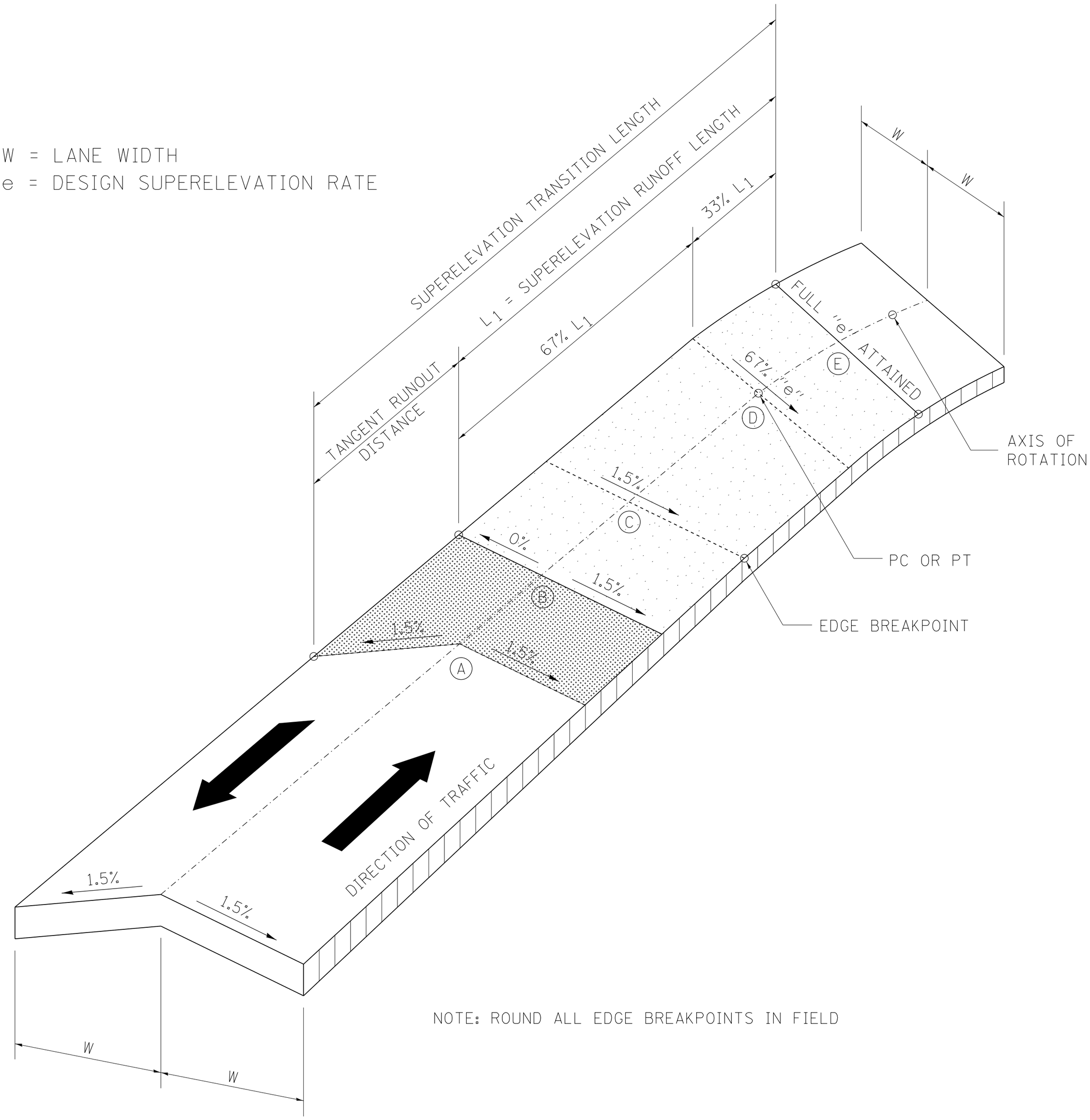

NOTE: ROUND ALL EDGE BREAKPOINTS IN FIELD

TRANSITION CURVE TABLE

CURVE PI STA.	SUPERELEVATION "e"	W	SUPERELEVATION TRANSITION LENGTH	TANGENT RUNOUT DISTANCE	SUPERELEVATION RUNOFF LENGTH

PLOT DATE = Thu Nov 13 11:30:23 2014

REVISED - 11-09-06	REGION 2 / DISTRICT 2 STANDARD			F.A. RTE.	SECTION	COUNTY	TOTAL SHEETS / SHEET NO.
REVISED -							
REVISED -						CONTRACT NO.	
REVISED -	SCALE: 1.0000 ' / in.	SHEET NO. OF SHEETS	STA. TO STA.	FED. ROAD DIST. NO.	ILLINOIS	FED. AID PROJECT	

HOT–MIX ASPHALT APPROACHES & MAILBOX RETURNS FOR SINGLE LIFT (SMART) RESURFACING PROJECTS

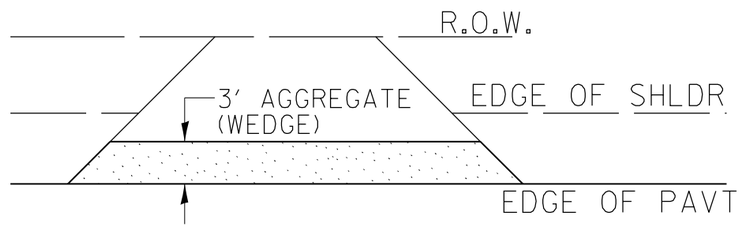

FIELD ENTRANCE

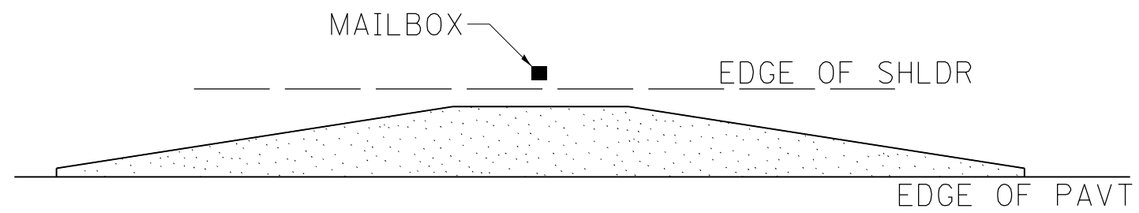

MAILBOX TURNOUT

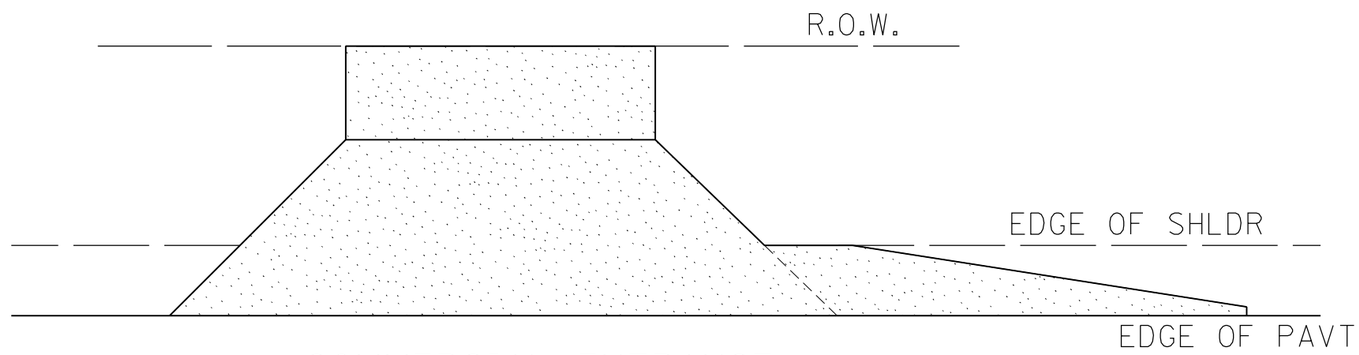

COMMERCIAL ENTRANCE

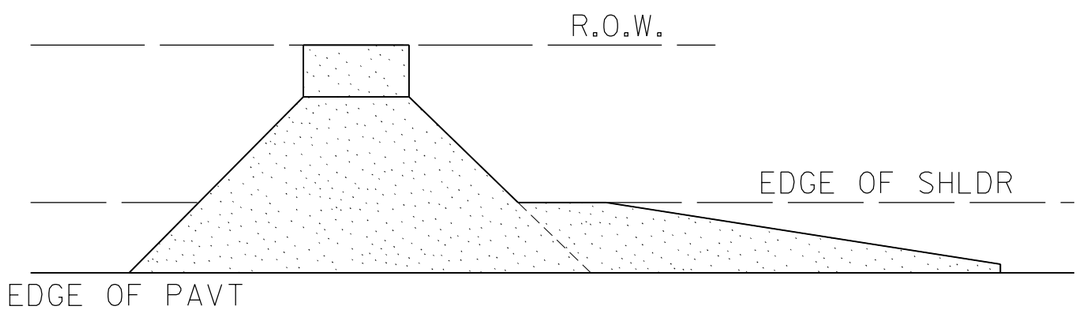

PRIVATE ENTRANCE

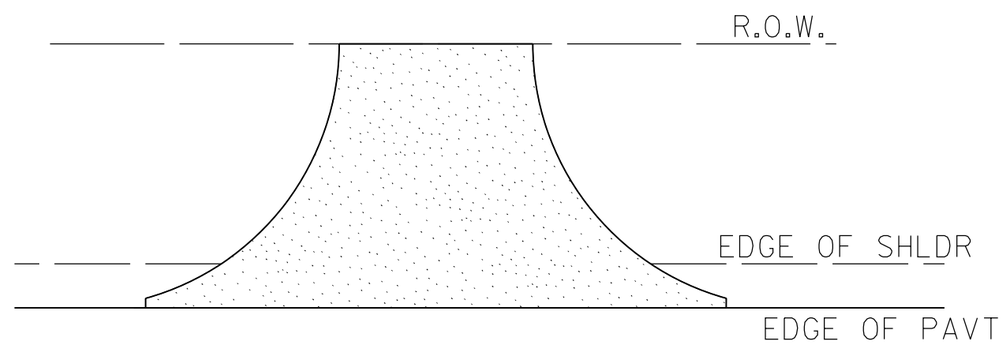

SIDE ROAD RETURN

NOTE: EXISTING HMA PE's, CE's, SR's, & MB TURNOUTS
Place 1 1/2" Incidental Hot-Mix Asphalt Surfacing #40800050 on entrance to conform to the existing configuration.

EXISTING AGG. PE's & CE's
Place 2" Incidental Hot-Mix Asphalt Surfacing #40800050 on existing entrance to conform to the present configuration.

EXISTING AGG. SIDEROADS
Place 3" Incidental Hot-Mix Asphalt Surfacing #40800050 on sideroad to conform to the present configuration.

EXISTING AGG. MAILBOX TURNOUTS
Existing Agg. Mailbox Turnouts shall be constructed as shown below.

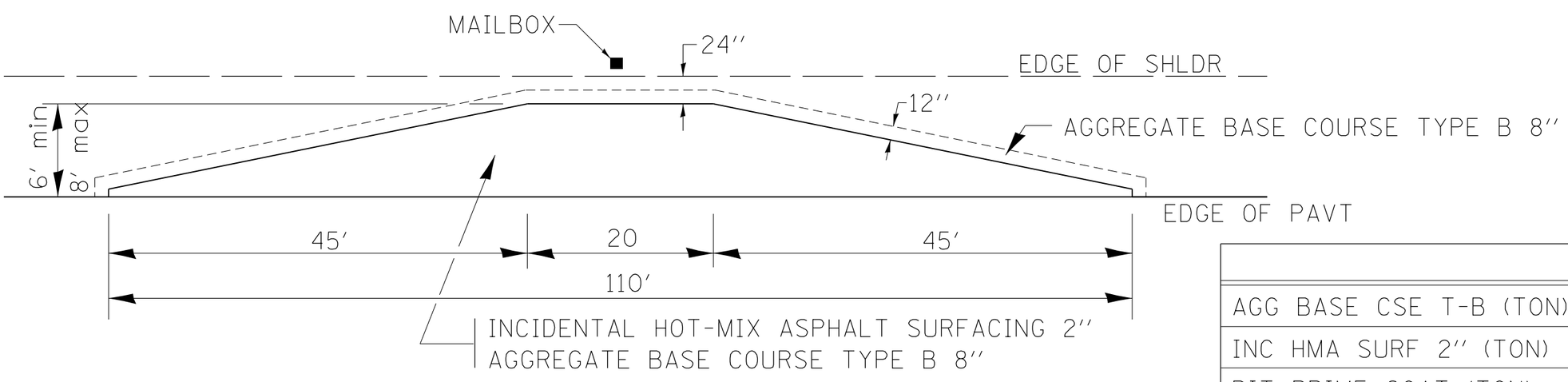

	6'	8'
AGG BASE CSE T-B (TON)	24.5	31.1
INC HMA SURF 2" (TON)	7.3	9.8
BIT PRIME COAT (TON)	0.06	0.08

PLOT DATE = Thu Nov 13 11:30:24 2014

REVISED - 10-21-08	REGION 2 / DISTRICT 2 STANDARD	F.A. RTE.	SECTION	COUNTY	TOTAL SHEETS / SHEET NO.
REVISED -					
REVISED -				CONTRACT NO.	
REVISED -	SCALE: 1.0000 ' / in. / SHEET NO. OF SHEETS / STA. TO STA.	FED. ROAD DIST. NO.	ILLINOIS	FED. AID PROJECT	

HOT–MIX ASPHALT APPROACHES & MAILBOX RETURNS FOR TWO LIFT (3P) RESURFACING PROJECTS

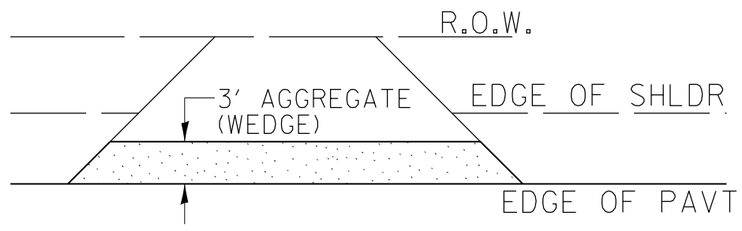

FIELD ENTRANCE

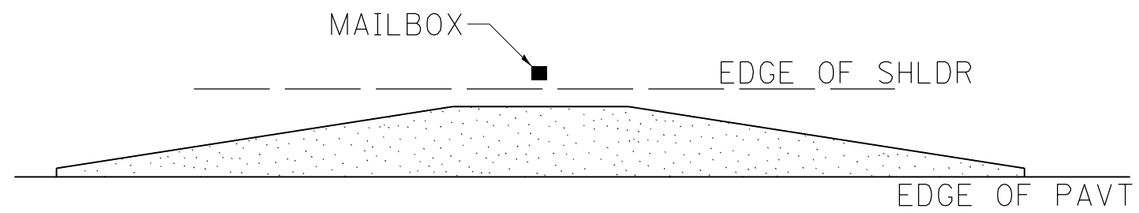

MAILBOX TURNOUT

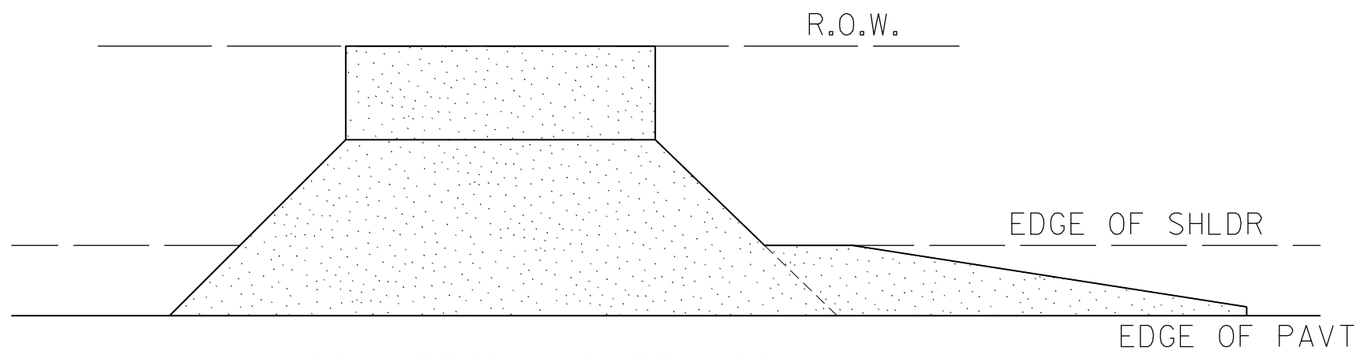

COMMERCIAL ENTRANCE

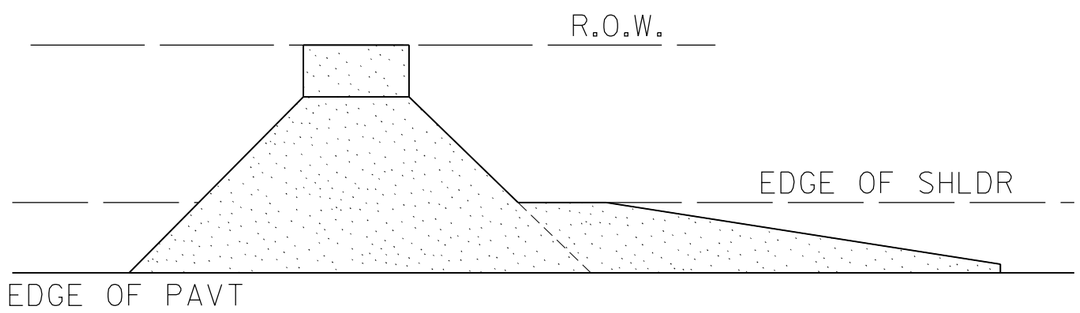

PRIVATE ENTRANCE

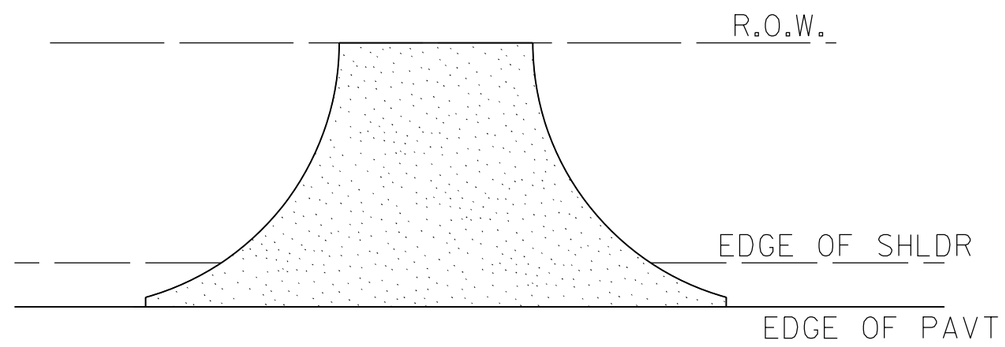

SIDE ROAD RETURN

NOTE: EXISTING HMA PE's, CE's, SR's, & MB TURNOUTS
Place 2 1/4" Incidental Hot-Mix Asphalt Surfacing #40800050 on entrance to conform to the existing configuration.

EXISTING AGG. PE's & CE's
Place 2 1/4" Incidental Hot-Mix Asphalt Surfacing #40800050 on existing entrance to conform to the present configuration.

EXISTING AGG. SIDEROADS
Place 3" Incidental Hot-Mix Asphalt Surfacing #40800050 on sideroad to conform to the present configuration.

EXISTING AGG. MAILBOX TURNOUTS
Existing Agg. Mailbox Turnouts shall be constructed as shown below.

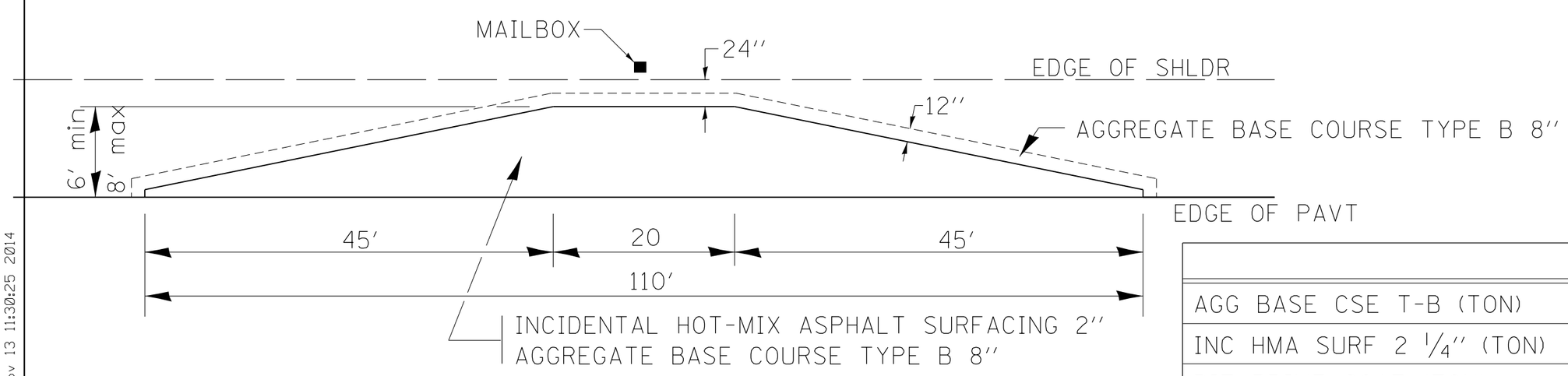

	6'	8'
AGG BASE CSE T-B (TON)	24.5	31.1
INC HMA SURF 2 1/4" (TON)	8.2	11.0
BIT PRIME COAT (TON)	0.06	0.08

PLOT DATE = Thu Nov 13 11:30:25 2014

REVISED - 6-27-14	REGION 2 / DISTRICT 2 STANDARD	F.A. RTE.	SECTION	COUNTY	TOTAL SHEETS / SHEET NO.
REVISED - 10-21-08					
REVISED -				CONTRACT NO.	
REVISED -	SCALE: 1.0000 ' / in. / SHEET NO. OF SHEETS / STA. TO STA.	FED. ROAD DIST. NO.	ILLINOIS	FED. AID PROJECT	

SAFETY EDGE (SMART PROJECT)

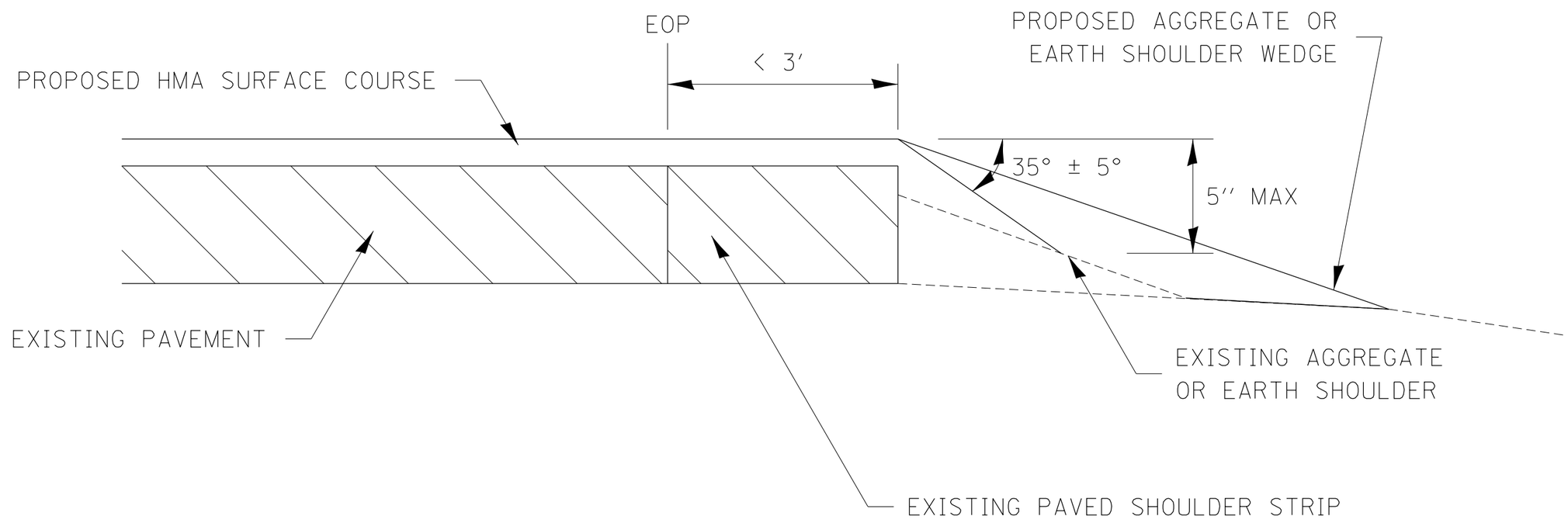

NO MILLING: ADJACENT SHOULDER FLUSH
WITH OR LOWER THAN EXISTING PAVEMENT

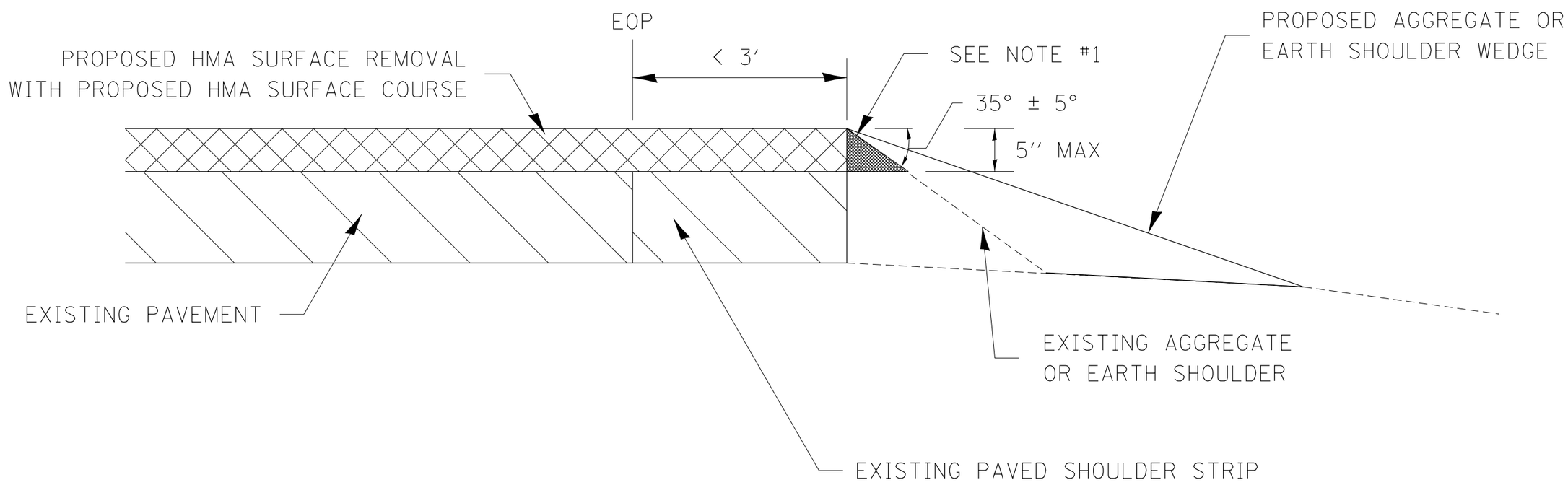

MILLING: WITH ADJACENT SHOULDER FLUSH WITH
OR HIGHER THAN MILLED SURFACE

NOTES : THE DEVICE WHICH FORMS THE SAFETY EDGE SHALL BE MOUNTED ON THE PAVER SCREED AGAINST THE END GATE AND SHALL BE REMOVABLE OR BE ABLE TO BE LIFTED WHEN NOT IN USE. THE DEVICE SHALL BE DESIGNED TO MAINTAIN CONTACT WITH SURFACE OF THE SHOULDER AND ALLOW AUTOMATIC TRANSITION TO CROSS ROADS, DRIVEWAYS AND OBSTRUCTIONS. THE DEVICE SHALL ALSO CONSTRAIN THE HMA MATERIAL AND INCREASE THE CONSOLIDATION OF THE EXTRUDED PROFILE. THE USE OF A CONVENTIONAL SINGLE PLATE STRIKE-OFF WILL NOT BE ALLOWED.

ROLLERS WILL NOT BE ALLOWED ON THE SLOPED FACE OF THE SAFETY EDGE.

NOTE #1:
PRIOR TO THE PLACEMENT OF THE HMA SAFETY EDGE, IF THE ADJACENT AGGREGATE OR EARTH SHOULDER IS HIGHER THAN THE MILLED SURFACE, THE AREA REQUIRED FOR PLACEMENT OF THE SAFETY EDGE SHALL BE BROUGHT FLUSH WITH THE MILLED SURFACE IN A MANNER APPROVED BY THE ENGINEER. THIS WORK SHALL BE CONSIDERED INCLUDED IN THE CONTRACT UNIT PRICE PER TON FOR HOT-MIX ASPHALT SURFACE COURSE OF THE TYPE SPECIFIED.

PLOT DATE = Thu Nov 13 11:30:26 2014

REVISED - 10-11-13	REGION 2 / DISTRICT 2 STANDARD				F.A. RTE.	SECTION	COUNTY	TOTAL SHEETS	SHEET NO.
REVISED -									
REVISED -							CONTRACT NO.		
REVISED -	SCALE: 1.0000 '/ in.	SHEET NO. OF SHEETS	STA.	TO STA.	FED. ROAD DIST. NO.	ILLINOIS	FED. AID PROJECT		

SAFETY EDGE (3P PROJECTS)

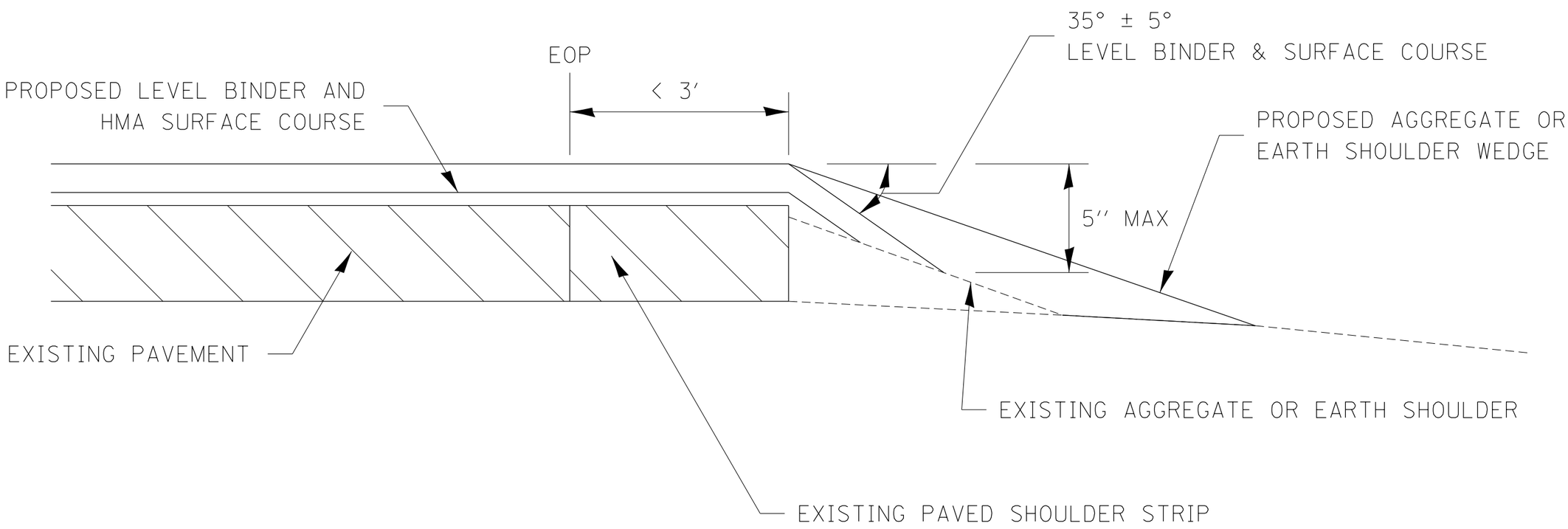

NO MILLING: ADJACENT SHOULDER FLUSH
WITH OR LOWER THAN EXISTING PAVEMENT

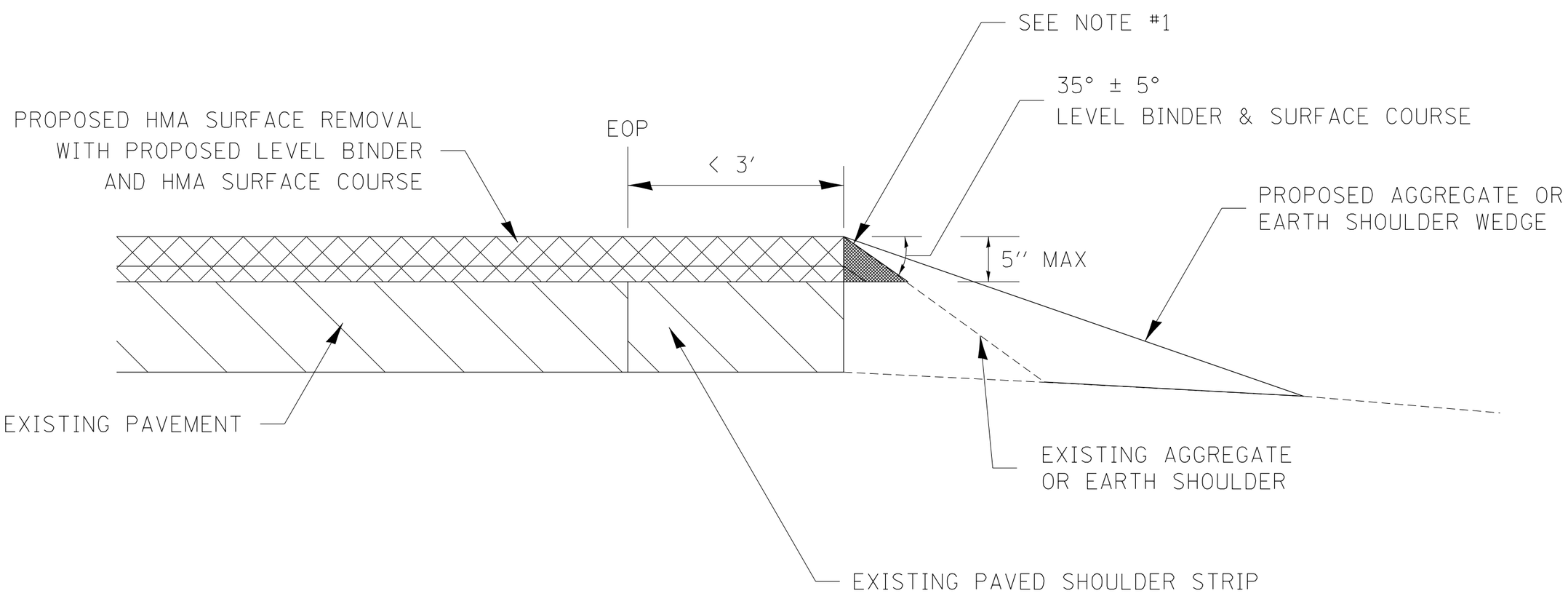

MILLING: WITH ADJACENT SHOULDER FLUSH
WITH OR HIGHER THAN MILLED SURFACE

NOTES : THE DEVICE WHICH FORMS THE SAFETY EDGE SHALL BE MOUNTED ON THE PAVER SCREED AGAINST THE END GATE AND SHALL BE REMOVABLE OR BE ABLE TO BE LIFTED WHEN NOT IN USE. THE DEVICE SHALL BE DESIGNED TO MAINTAIN CONTACT WITH SURFACE OF THE SHOULDER AND ALLOW AUTOMATIC TRANSITION TO CROSS ROADS, DRIVEWAYS AND OBSTRUCTIONS. THE DEVICE SHALL ALSO CONSTRAIN THE HMA MATERIAL AND INCREASE THE CONSOLIDATION OF THE EXTRUDED PROFILE. THE USE OF A CONVENTIONAL SINGLE PLATE STRIKE-OFF WILL NOT BE ALLOWED.

ROLLERS WILL NOT BE ALLOWED ON THE SLOPED FACE OF THE SAFETY EDGE.

NOTE #1:
PRIOR TO THE PLACEMENT OF THE HMA SAFETY EDGE, IF THE ADJACENT AGGREGATE OR EARTH SHOULDER IS HIGHER THAN THE MILLED SURFACE, THE AREA REQUIRED FOR PLACEMENT OF THE SAFETY EDGE SHALL BE BROUGHT FLUSH WITH THE MILLED SURFACE IN A MANNER APPROVED BY THE ENGINEER. THIS WORK SHALL BE CONSIDERED INCLUDED IN THE CONTRACT UNIT PRICE PER TON FOR HOT-MIX ASPHALT SURFACE COURSE OF THE TYPE SPECIFIED.

PLOT DATE = Thu Nov 13 11:30:27 2014

REVISED - 10-11-13	REGION 2 / DISTRICT 2 STANDARD				F.A. RTE.	SECTION	COUNTY	TOTAL SHEETS	SHEET NO.
REVISED -									
REVISED -							CONTRACT NO.		
REVISED -	SCALE: 1.0000 '/ in.	SHEET NO. OF SHEETS	STA.	TO STA.	FED. ROAD DIST. NO.	ILLINOIS	FED. AID PROJECT		

CURB RAMP DETAILS

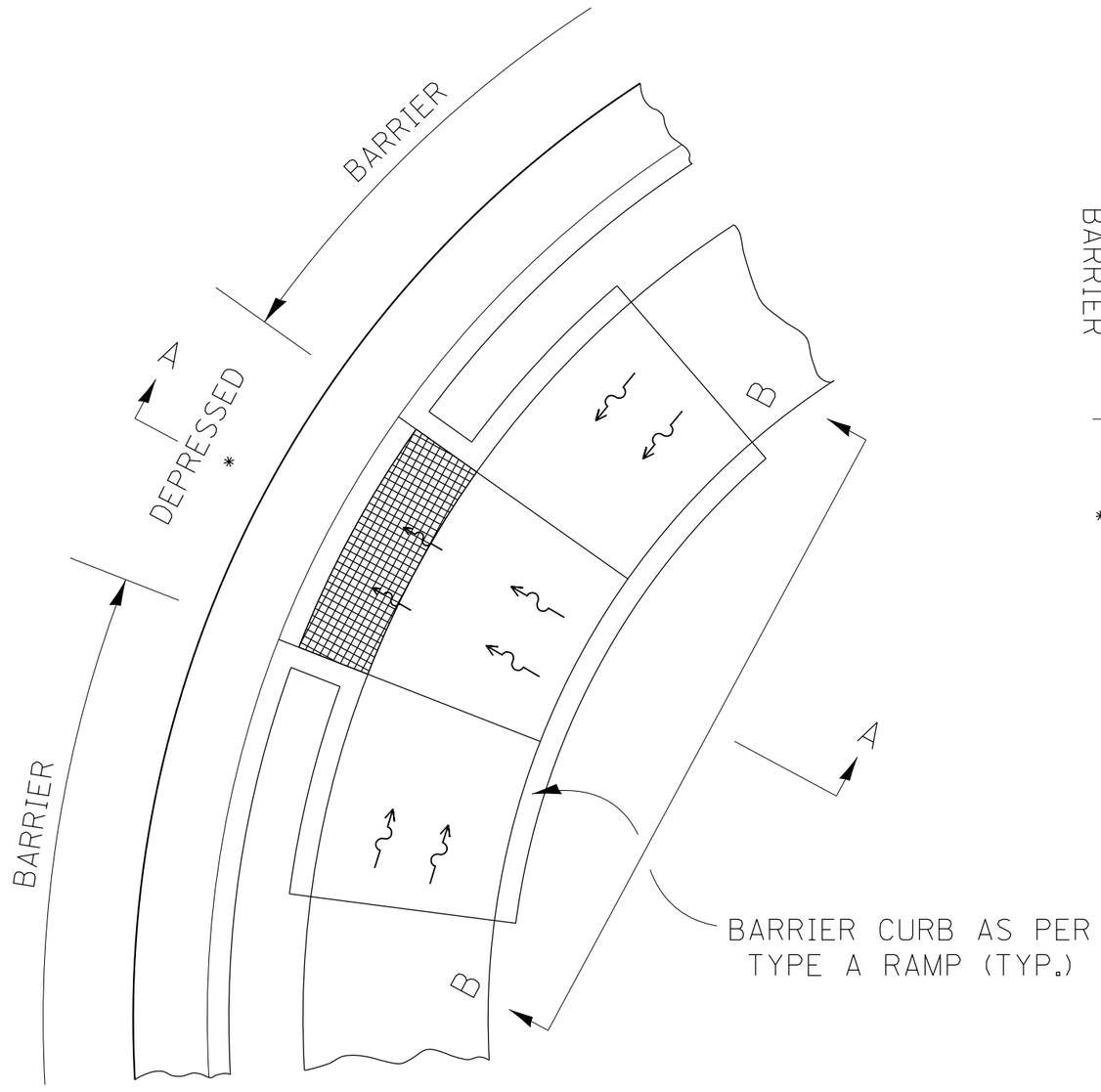

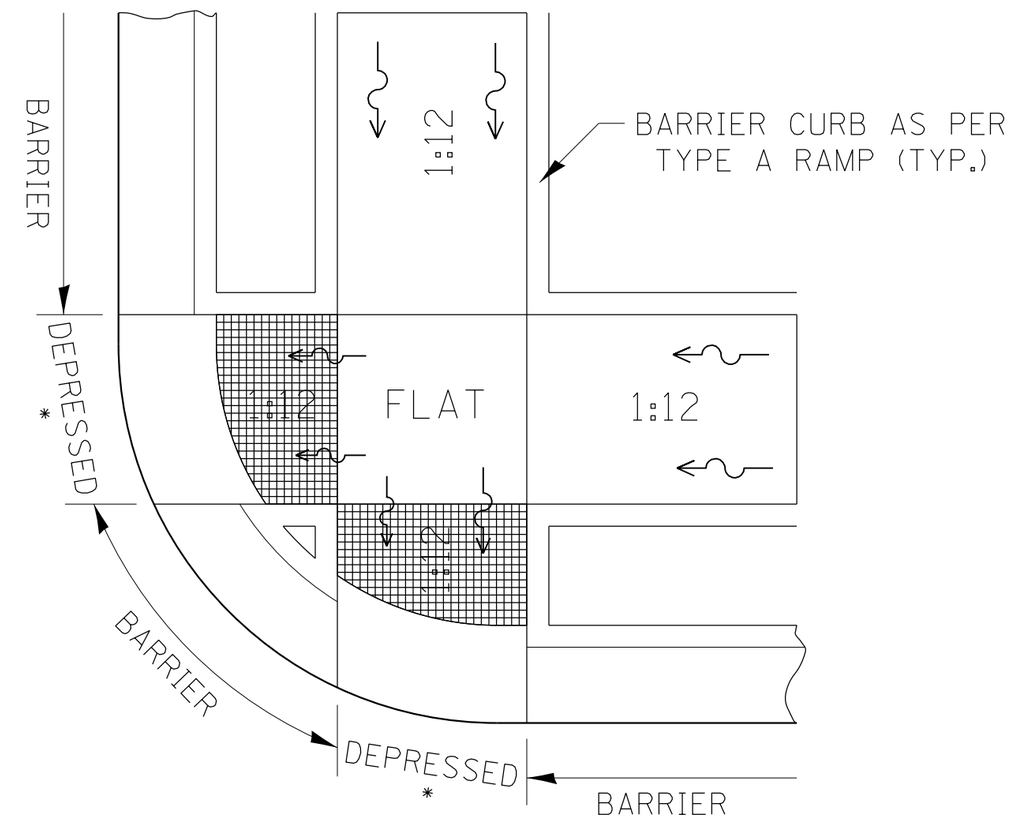

SEE STANDARD 424001
FOR THE DETAIL OF SIDE CURB
& SEE PLANS FOR RAMP TYPE.

ALL DIMENSIONS ARE IN INCHES
UNLESS OTHERWISE NOTED.

* SEE NOTE BELOW

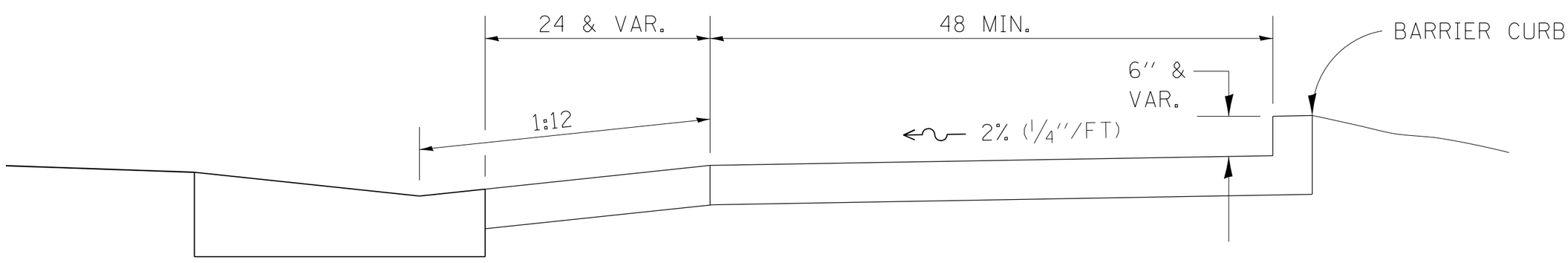

SECTION A-A

SECTION B-B

NOTES : THIS DETAIL TO BE USED IN CONJUNCTION WITH STATE STANDARD 424001.
THE MAXIMUM ALLOWABLE CROSS SLOPE FOR SIDEWALK IS 2% (1/4''/FT).
THE MAXIMUM ALLOWABLE SIDEWALK GRADE IS 8% (1/12''/FT). IF SPACE LIMITATIONS PROHIBIT THE USE OF THE 1:12 SLOPE, THEN SLOPES BETWEEN 1:10 ARE 1:12 ARE PERMITTED FOR A MAXIMUM RISE OF 6. SLOPES 1:8 AND 1:10 ARE ALLOWED FOR A MAXIMUM RISE OF 3. SLOPES STEEPER THAN 1:8 ARE NOT PERMITTED.
THE DEPRESSED CURB IS NOT STANDARD. THE RISE IS 1/2 INSTEAD OF 1 1/2.

PLOT DATE = Thu Nov 13 11:30:27 2014

REVISED - 8-27-13	REGION 2 / DISTRICT 2 STANDARD				F.A. RTE.	SECTION	COUNTY	TOTAL SHEETS	SHEET NO.
REVISED - 10-14-11									
REVISED -							CONTRACT NO.		
REVISED -	SCALE: 1.0000 '/ in.	SHEET NO. OF SHEETS	STA.	TO STA.	FED. ROAD DIST. NO.	ILLINOIS	FED. AID PROJECT		

CURB RAMP DETAILS **60.2**

SLOTTED DRAIN PIPE FOR TYPE A GUTTER (SPECIAL)

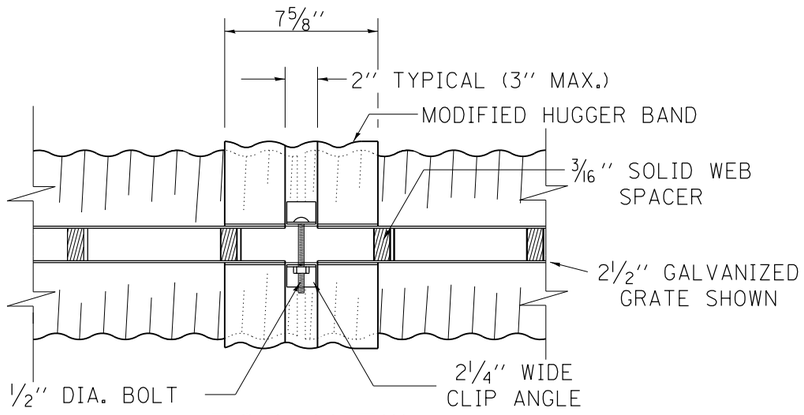

TOP VIEW

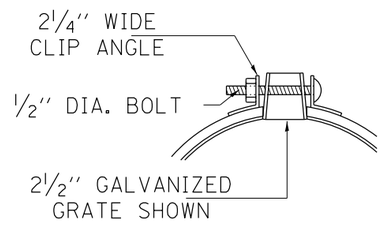

END VIEW

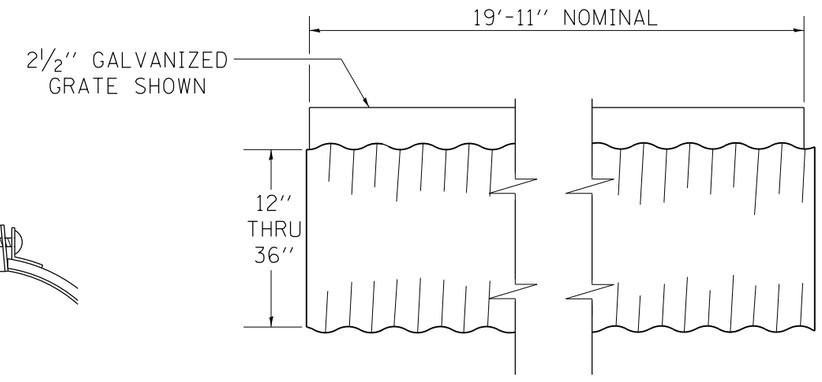

TYPICAL PIPE SECTION

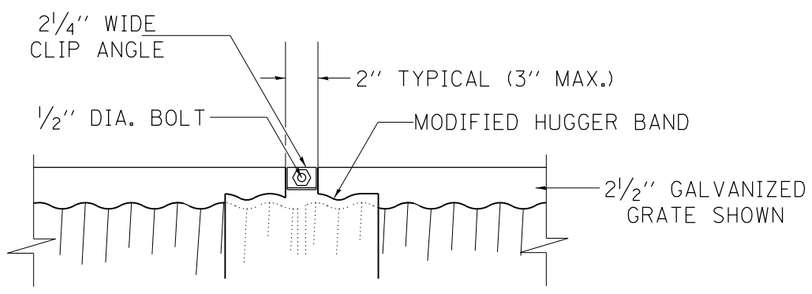

SIDE VIEW

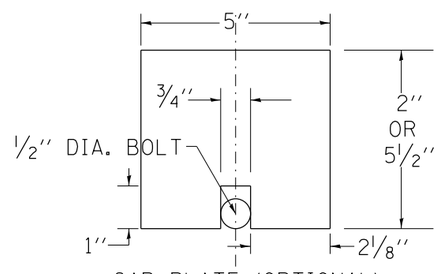

GAP PLATE (OPTIONAL)
MAY BE PLACED DIRECTLY OVER BAND BOLT TO PROVIDE CONTINUOUS FORM FOR GROUTING.

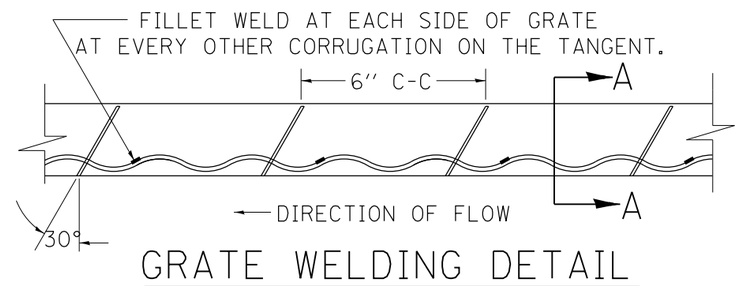

GRATE WELDING DETAIL

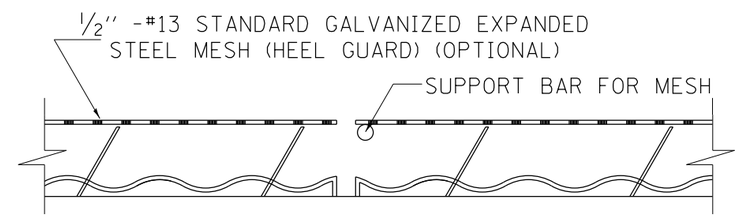

SECTION B-B

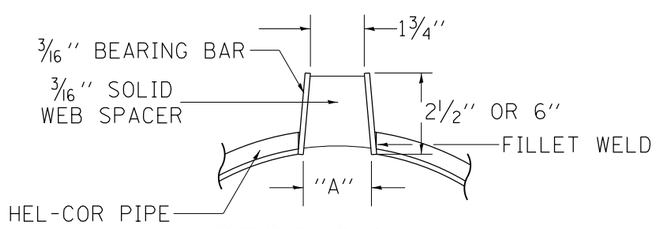

SECTION A-A

STANDARD DETAIL

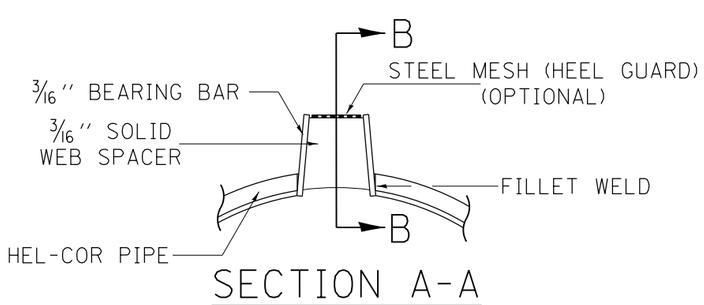

SECTION A-A

DETAIL WITH MESH

(TRAPEZOIDAL GALVANIZED GRATE SHOWN)

STANDARD SIZES						
GAGE OF PIPE	DIAMETER OF PIPE					
	12''	15''	18''	24''	30''	36''
16	X	X	X	X	X	X
14	X	X	X	X	X	X
12	N.A.	N.A.	N.A.	N.A.	X	X

GRATE TYPE		''A''
VERT	2-1/2''	1-3/4''
VERT	6''	1-3/4''
TRAP	2-1/2''	2-1/4''
TRAP	6''	3''

VERT = VERTICAL
TRAP = TRAPIZOIDAL

SLOTTED DRAIN NOTES

1. GRATING IS AVAILABLE IN DEPTHS OF 2 1/2'' AND 6''.
2. VERTICAL GRATING (STRAIGHT SIDES) WITH VERTICAL SPACERS IS ALSO AVAILABLE.
3. FOR 6'' VERTICAL & TRAPIZOIDAL REQUIREMENTS, THE SLOTTED DRAIN BAND MAY BE FURNISHED WITH THE 4'' TECHCO BAND ANGLE.
4. DIMENSIONS ARE SUBJECT TO MANUFACTURING TOLERANCES.
5. REFERENCE CONTECH BAND MANUAL DWG. NO. 1008466 FOR BAND DETAILS.

MANUFACTURING TOLERANCES

1. VERTICAL BOW ± 3/8''
2. HORIZONTAL BOW ± 5/8''
3. TWIST ± 1/2''

NOTES

CLASS SI CONCRETE SHALL BE USED THROUGHOUT.

THE SLOTTED DRAIN SHALL BE CORRUGATED PIPE CULVERT WITH INTEGRAL SLOTTED DRAINS. BEFORE PLACING THE CONCRETE ADJACENT TO THE PIPE, THE SLOT SHALL BE COVERED BY EITHER THIN, FLAT METAL SHEETING OR BY A BOARD NOTCHED TO FIT OVER THE GRATE BARS. THIS COVERING MUST FIT CLOSELY IN THE SLOT TO PREVENT ENTRY OF CONCRETE INTO THE PIPE. PAVING OVER THE SLOTTED DRAIN WILL THEN BE ONE CONTINUOUS OPERATION OVER THE PROTECTED DRAIN. THE PROTECTION FOR THE DRAIN SLOT SHALL THEN BE REMOVED. THE PIPE SHALL DRAIN INTO THE SIDE OF THE INLET. THE OPENING WHERE THE SLOT IS REMOVED SHALL BE COVERED TO PREVENT CONCRETE FROM ENTERING THE PIPE.

THE CORRUGATED STEEL PIPE USED IN THE SLOTTED DRAIN SHALL MEET THE REQUIREMENTS OF AASHTO M-36/ASTM A 760. THE CMP SHALL BE GALVANIZED OR ALUMINIZED STEEL TYPE 2. STEEL GRATING SHALL MEET THE GALVANIZING REQUIREMENTS OF AASHTO M-111. THIS WORK WILL BE PAID FOR AT THE CONTRACT UNIT PRICE PER FOOT FOR SLOTTED DRAIN PIPE, AND SHALL INCLUDE ELBOWS.

USE APPROVED END CAP TO PREVENT CONCRETE ENTRY INTO THE PIPE DURING GUTTER CONSTRUCTION ON THE UPSTREAM END OF PIPE.

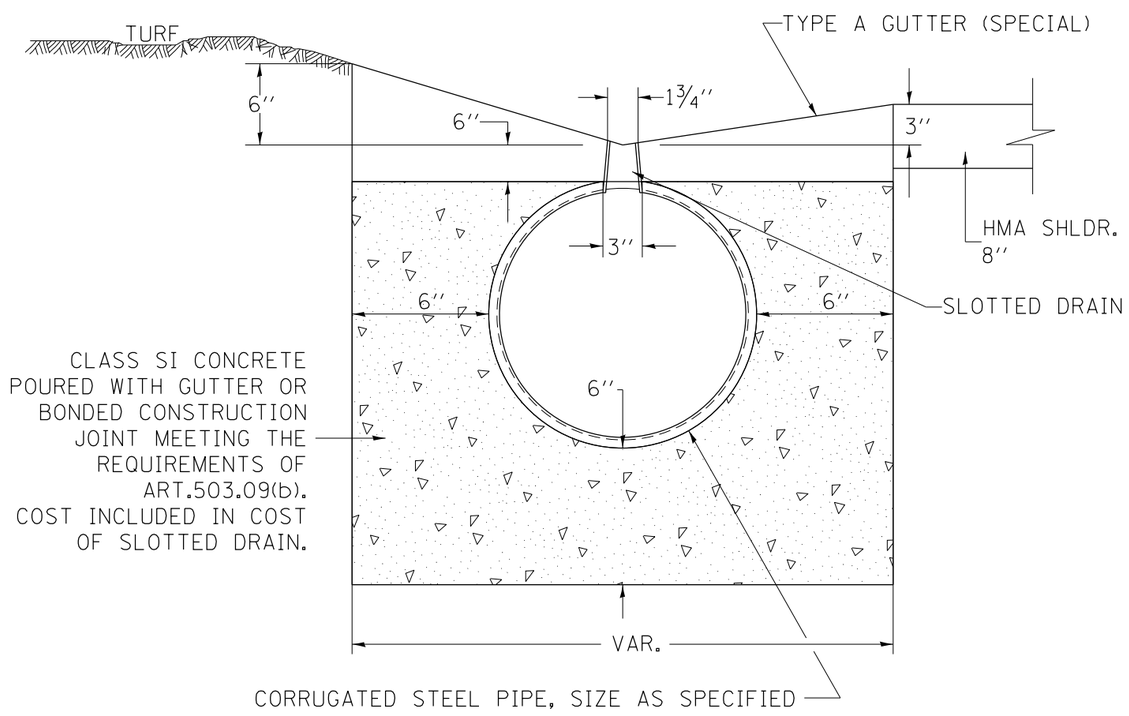

ALL DIMENSIONS ARE IN INCHES UNLESS OTHERWISE NOTED.

PLOT DATE = Thu Nov 13 11:30:28 2014

REVISED - 6-27-14	REGION 2 / DISTRICT 2 STANDARD			F.A. RTE.	SECTION	COUNTY	TOTAL SHEETS / SHEET NO.
REVISED - 10-14-11							
REVISED -						CONTRACT NO.	
REVISED -	SCALE: 1.0000 '/ in.	SHEET NO. OF SHEETS	STA. TO STA.	FED. ROAD DIST. NO.	ILLINOIS	FED. AID PROJECT	

PIPE HANDRAILS FOR STEPS

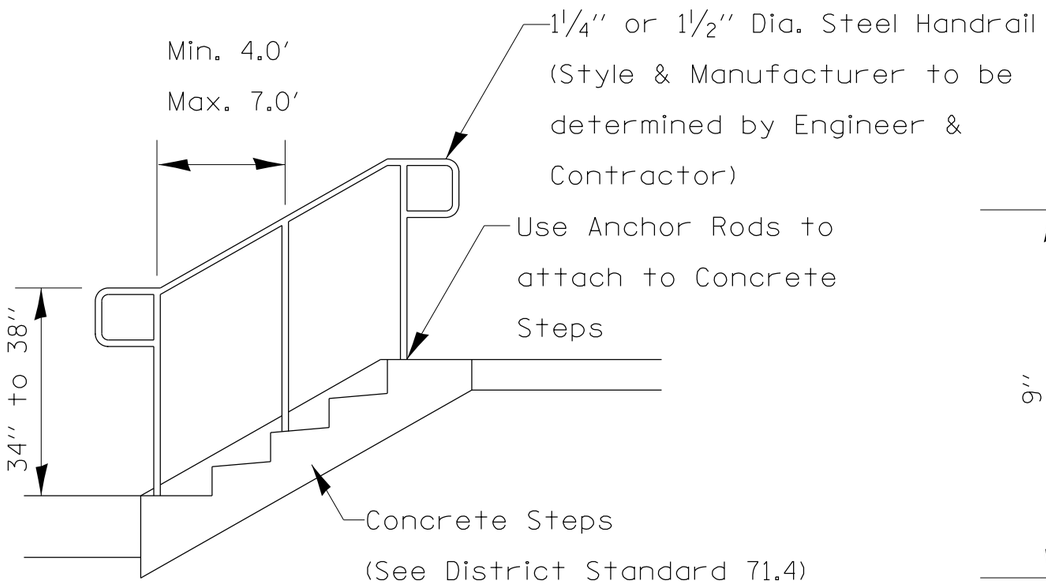

HANDRAIL FOR CONCRETE STEPS

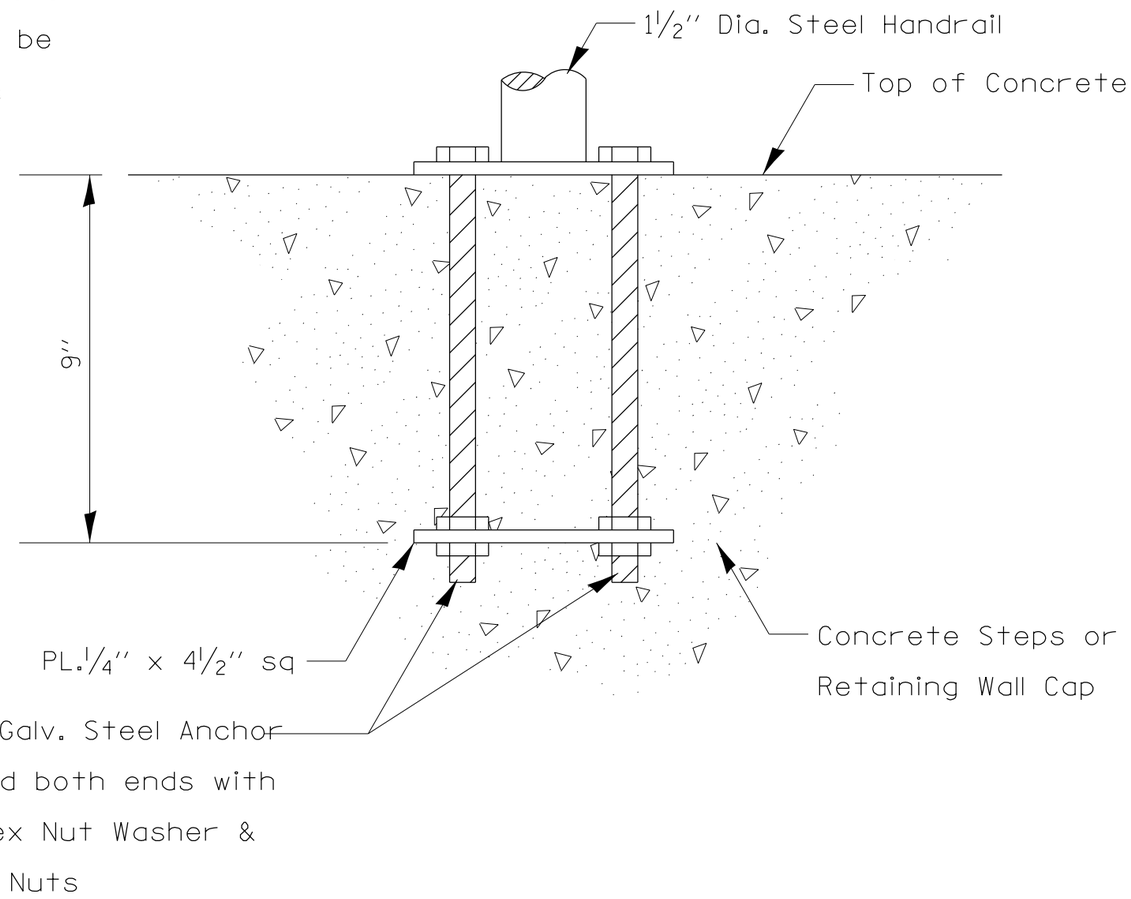

ANCHOR ROD DETAIL

(Included in the cost of Hand or Safety Rail)

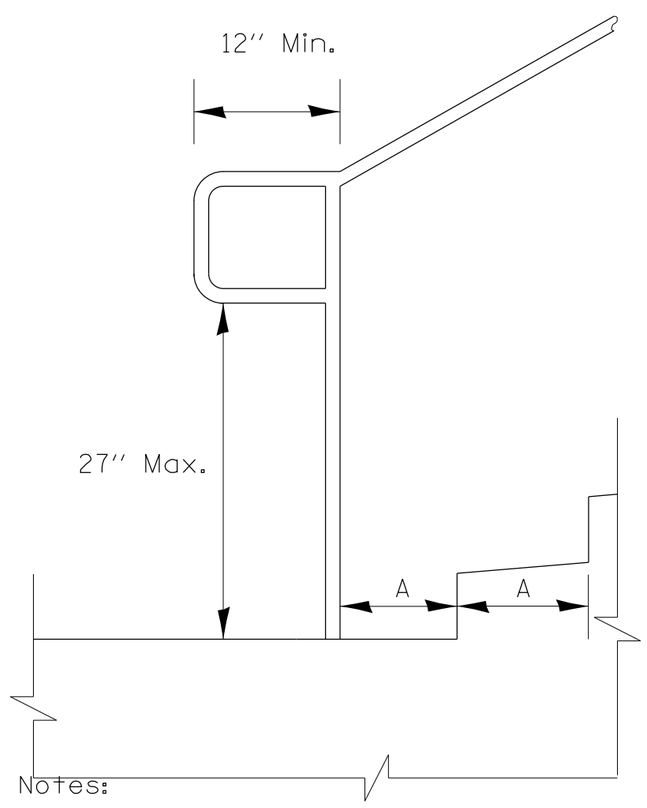

Notes:

Extension at Bottom of Run Detail

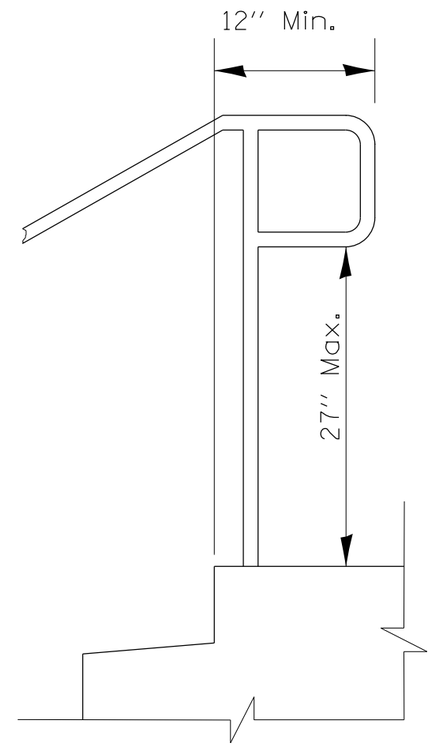

Extension at Top of Run Detail

Stairways shall have continuous handrails both sides of all stairs.

The inside handrail on switchback or dogleg stairs shall always be continuous.

Gripping surfaces shall be uninterrupted by newel posts, other construction elements, or obstructions.

Ends of handrail shall be either rounded or returned smoothly to floor, wall, or post.

Hand & safety rails shall not rotate within their fittings.

The clear space between hanrails and any wall shall be 1½''

Handrail shall conform to Section 509 with the exception that all pipe and connections shall be welded galvanized or aluminum according to Article 1006.30, or 1006,34.

The diameter of the gripping surface of the handrail shall be 1-1/4'' to 1-1/2''

This work shall be paid for at the contract unit price per FOOT for PIPE HANDRAIL.

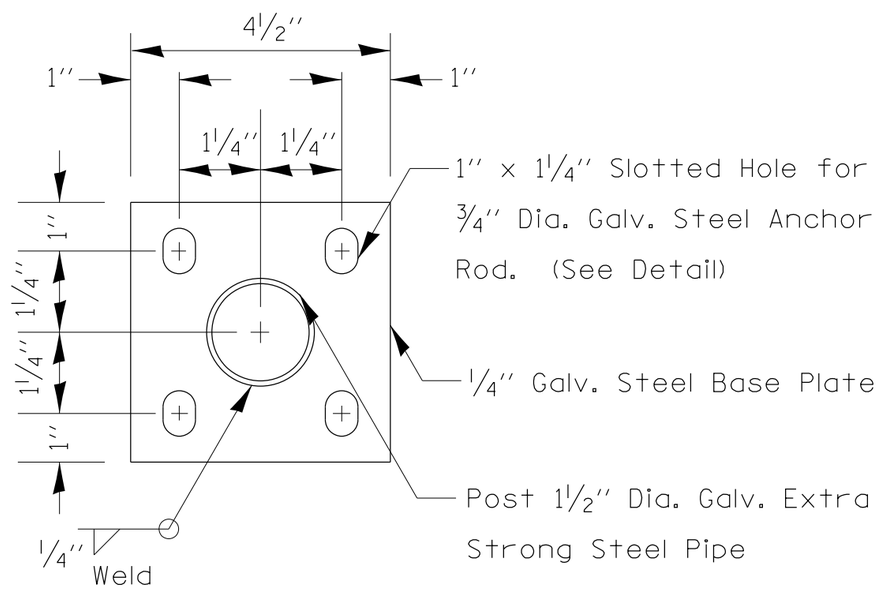

POST BASE PLATE DETAIL

(Included in the cost of Hand or Safety Rail)

REVISED - 10-14-11	REGION 2 / DISTRICT 2 STANDARD				F.A. RTE.	SECTION	COUNTY	TOTAL SHEETS	SHEET NO.
REVISED -									
REVISED -							CONTRACT NO.		
REVISED -	SCALE: 1.0000 '/ in.	SHEET NO. OF SHEETS	STA.	TO STA.	FED. ROAD DIST. NO.	ILLINOIS	FED. AID PROJECT		

PLOT DATE = Thu Nov 13 11:30:29 2014

PIPE HANDRAIL, SPECIAL – FOR RETAINING WALLS

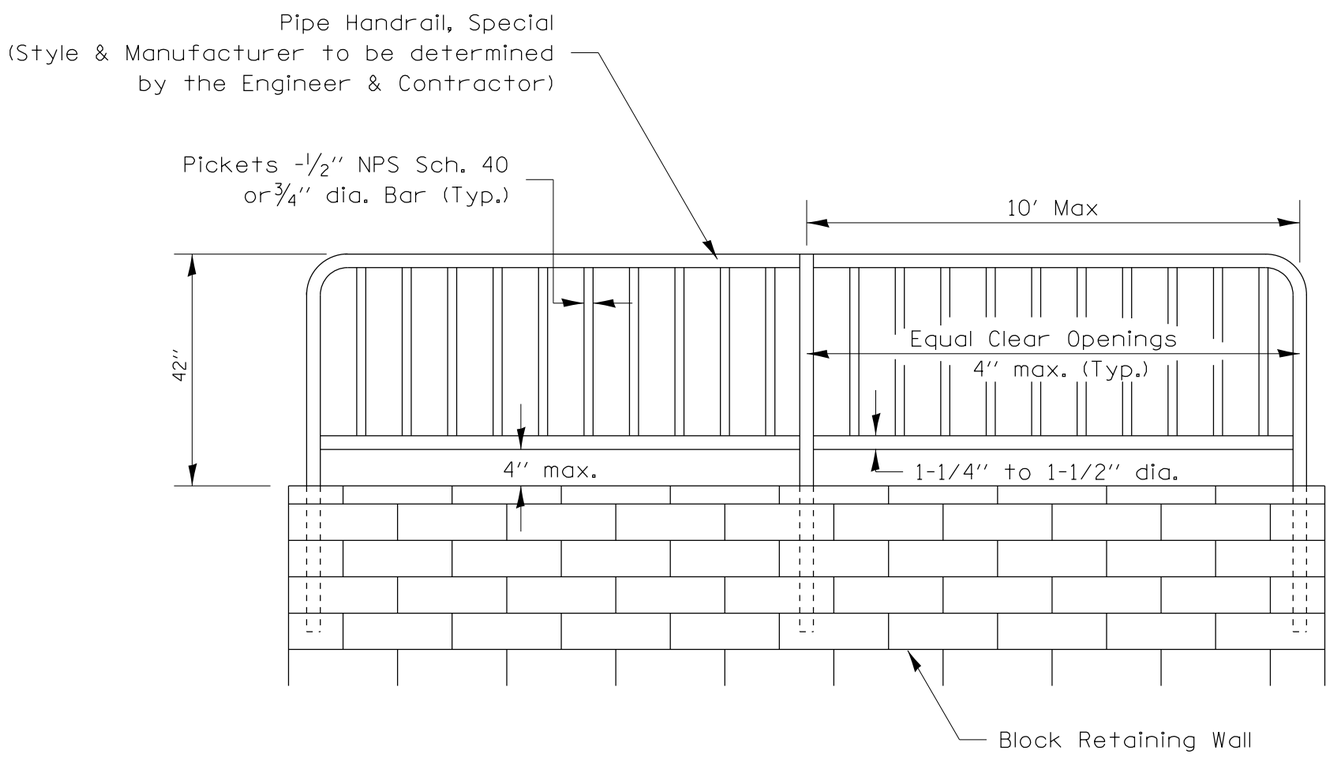

PIPE HANDRAIL, SPECIAL - FOR RETAINING WALL

(See details for installation options)

Notes:

Gripping surfaces shall be uninterrupted by construction elements, or obstructions.

Ends of handrail shall be rounded.

Handrail shall not rotate within their fittings.

Handrail shall conform to Section 509 with the exception that all pipe and connections shall be welded galvanized or aluminum according to Article 1006.30, or 1006,34.

The diameter of the gripping surface of the handrail shall be 1-1/4'' to 1-1/2''

Handrail required when wallhieght difference is 4' or greater

Drilling of blocks will be necessary for reinforcement placement.

This work shall consist of furnishing and erecting Handrails as listed above and according to this detail. This work shall be paid for at the contract UNIT price per FOOT for PIPE HANDRAIL, SPECIAL.

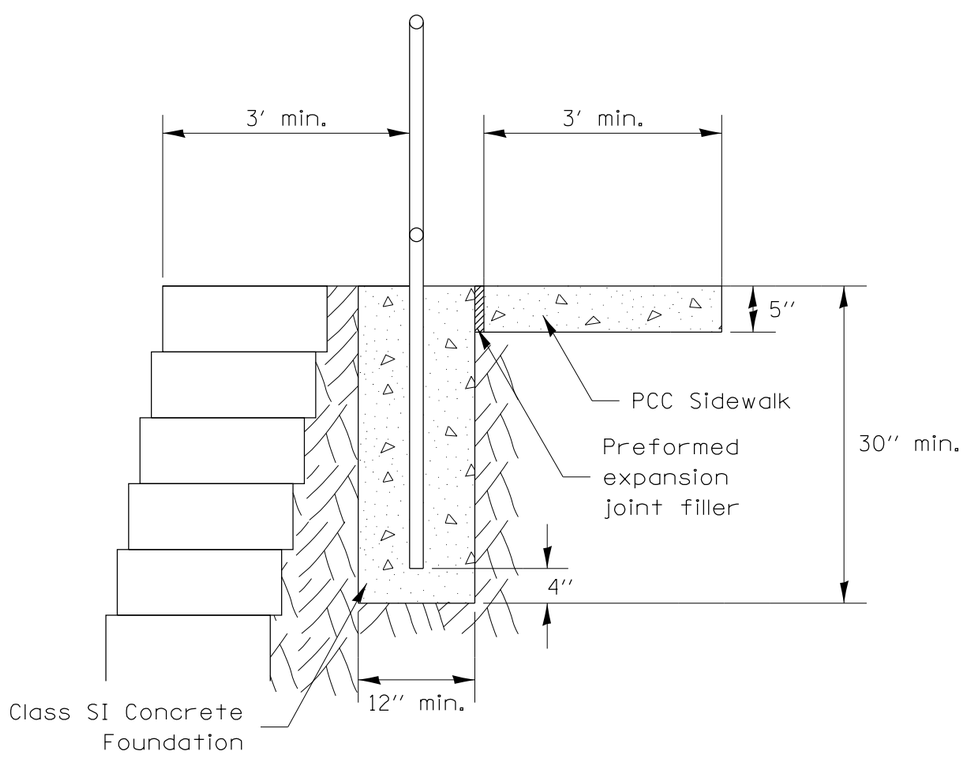

PIPE HANDRAIL, SPECIAL - FOR RETAINING WALL

(Option 1)

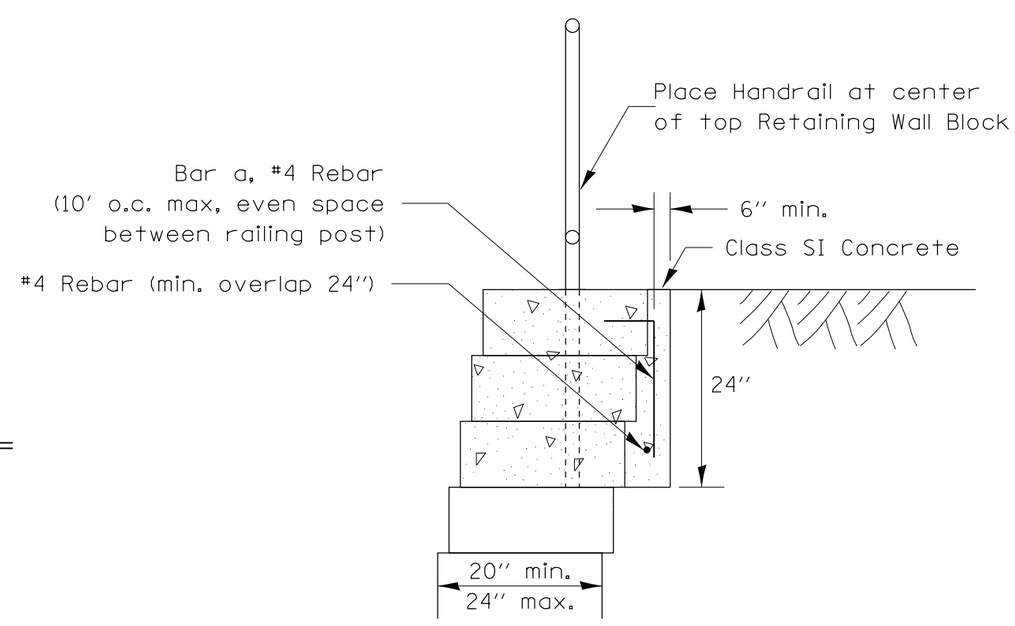

PIPE HANDRAIL, SPECIAL - FOR RETAINING WALL

(Option 2-Block depth greater than 20'')

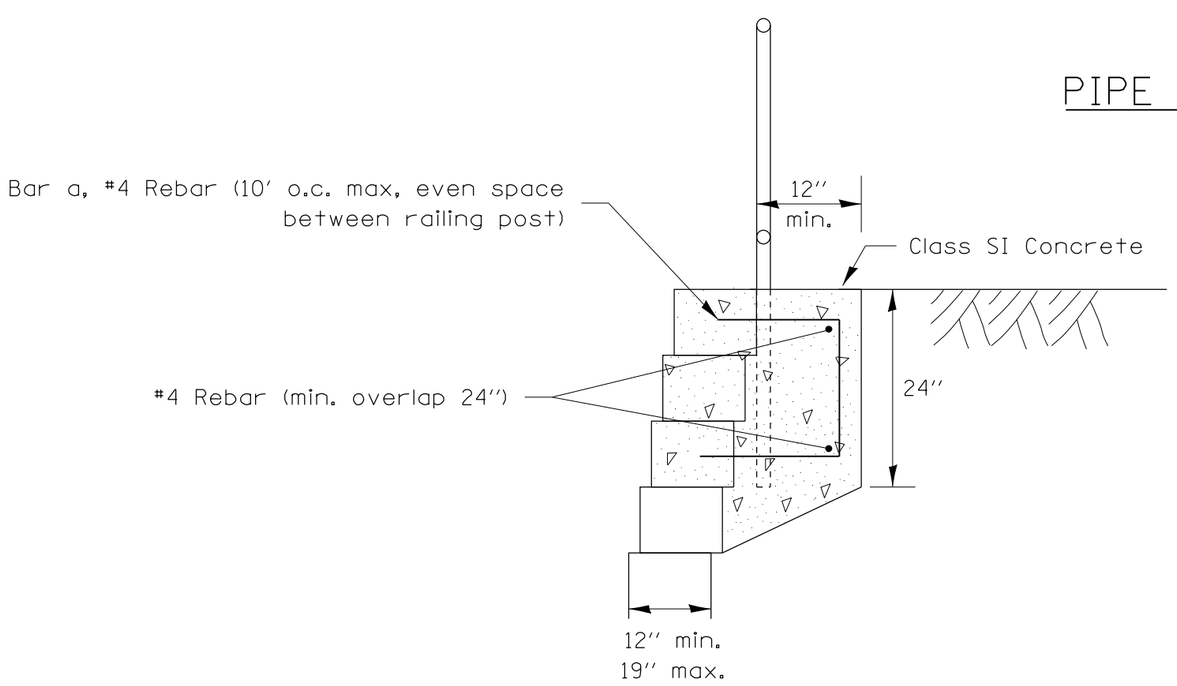

PIPE HANDRAIL, SPECIAL - FOR RETAINING WALL

(Option 3 - Block depth 12'' to 19'')

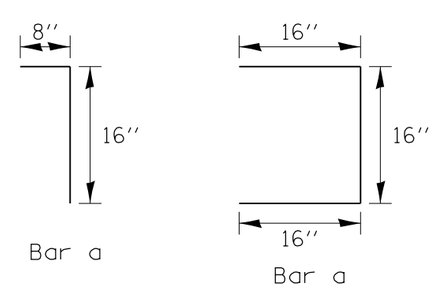

REVISED - 2-01-10	REGION 2 / DISTRICT 2 STANDARD	F.A. RTE.	SECTION	COUNTY	TOTAL SHEETS / SHEET NO.
REVISED -					
REVISED -		CONTRACT NO.			
REVISED -	SCALE: 1.0000 ' / in. / SHEET NO. OF SHEETS / STA. TO STA.	FED. ROAD DIST. NO.	ILLINOIS	FED. AID PROJECT	

PLOT DATE = Thu Nov 13 11:30:29 2014

PERMANENT SURVEY MARKERS, TYPE II

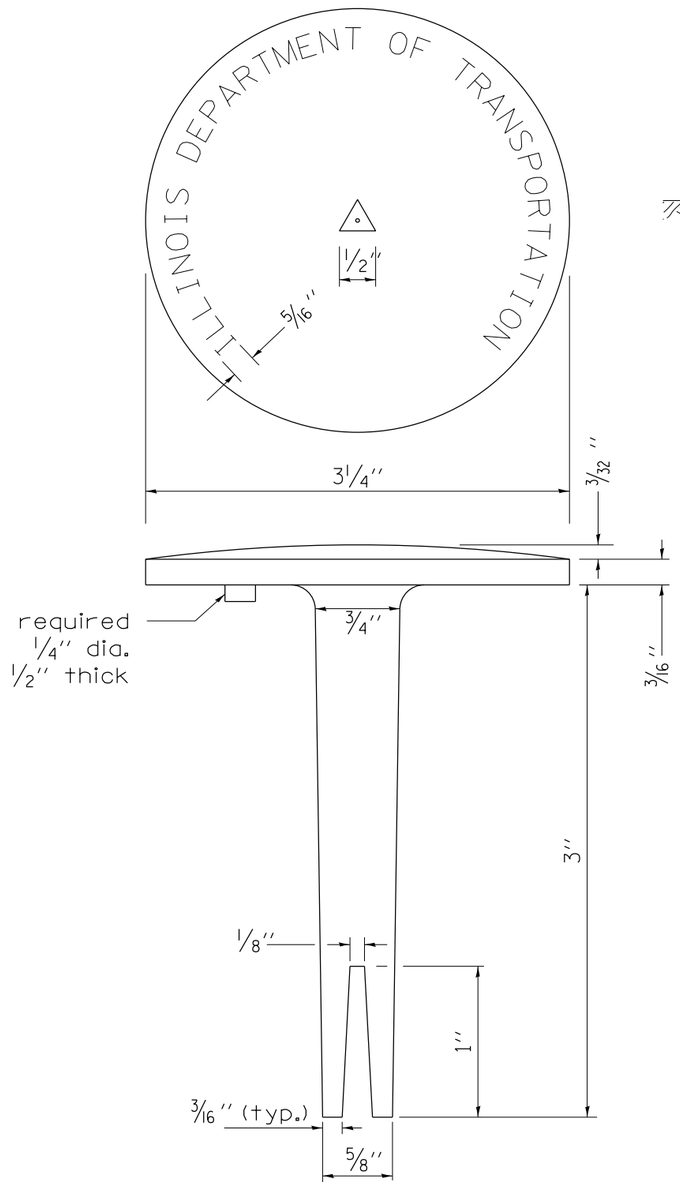

BRASS OR ALUMINUM TABLET

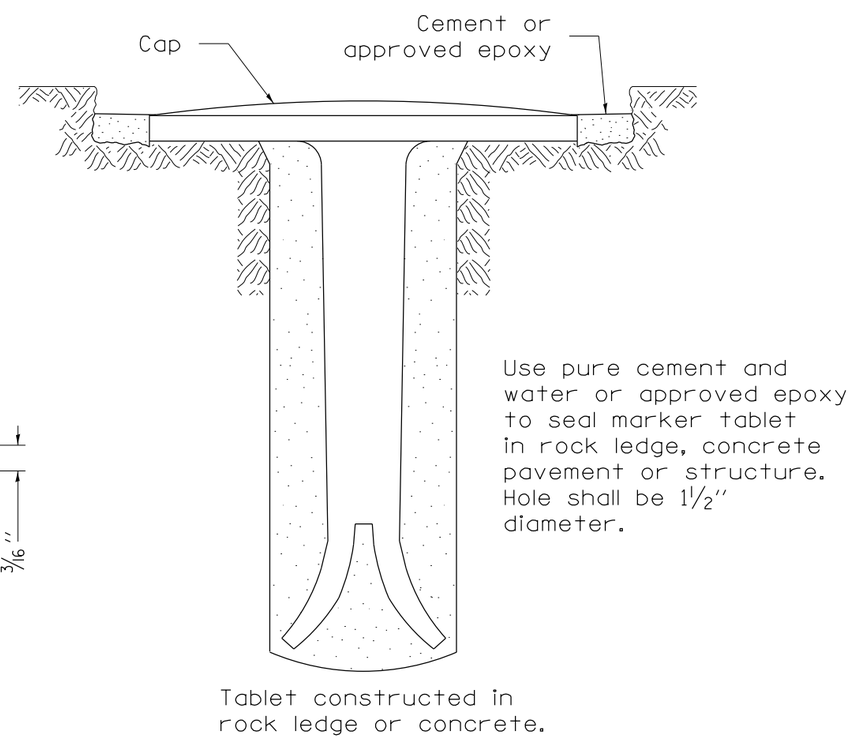

TYPE II

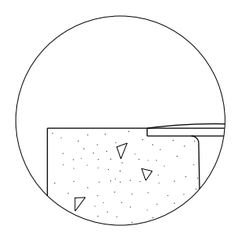

DETAIL A

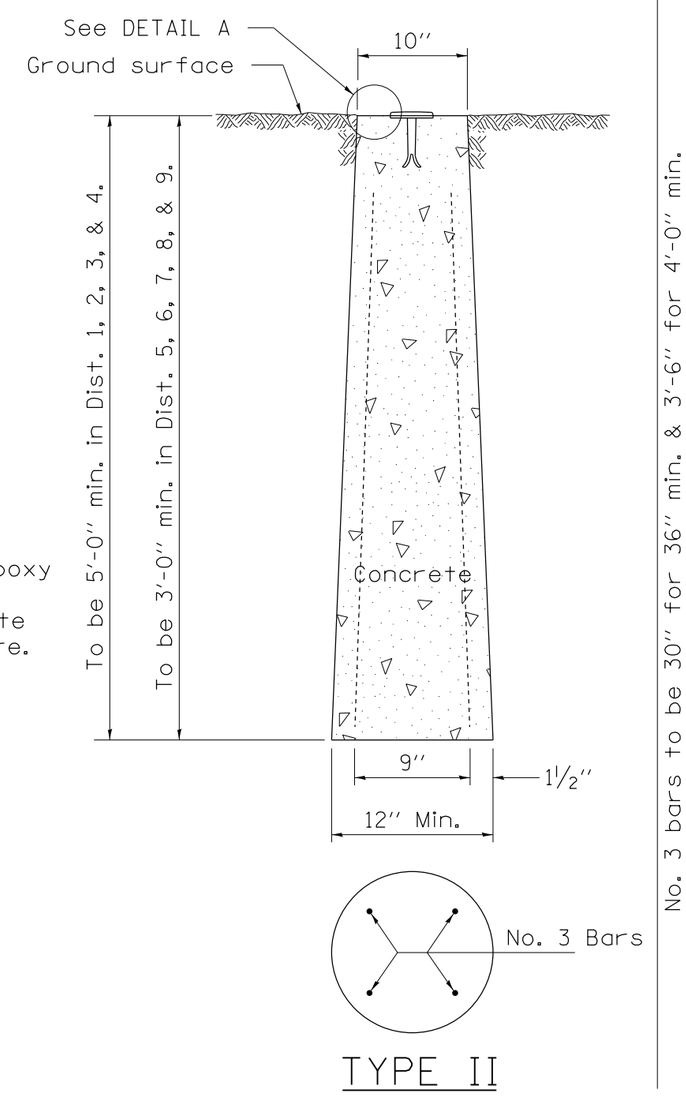

TYPE II

CAST-IN-PLACE MARKER

ALL DIMENSIONS ARE IN INCHES UNLESS OTHERWISE NOTED.

WITNESS MARKER FOR PERMANENT SURVEY MARKERS, TYPE II

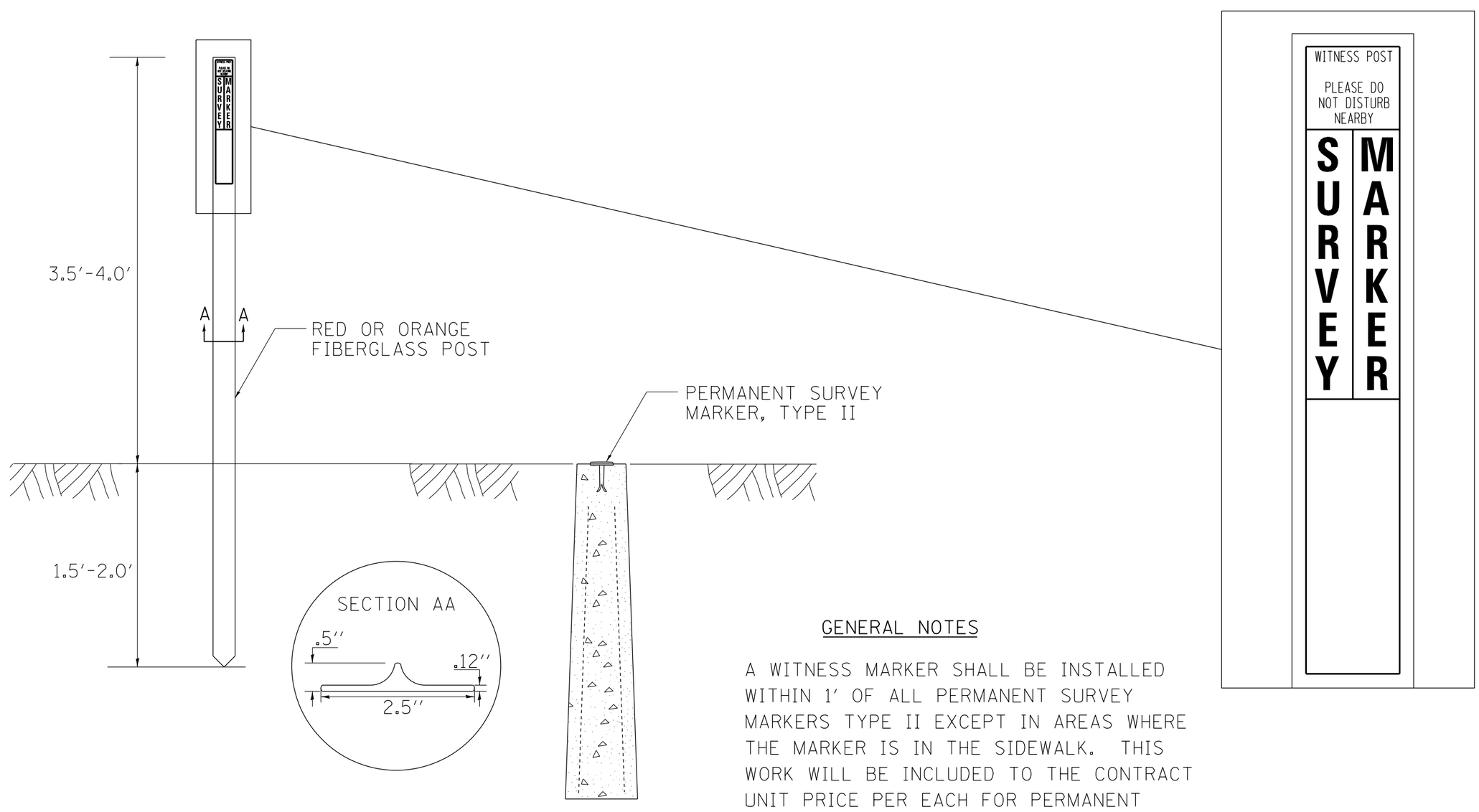

GENERAL NOTES

A WITNESS MARKER SHALL BE INSTALLED WITHIN 1' OF ALL PERMANENT SURVEY MARKERS TYPE II EXCEPT IN AREAS WHERE THE MARKER IS IN THE SIDEWALK. THIS WORK WILL BE INCLUDED TO THE CONTRACT UNIT PRICE PER EACH FOR PERMANENT SURVEY MARKERS, TYPE II.

REVISED - 6-27-14	REGION 2 / DISTRICT 2 STANDARD			F.A. RTE.	SECTION	COUNTY	TOTAL SHEETS / SHEET NO.
REVISED - 10-14-11							
REVISED -						CONTRACT NO.	
REVISED -	SCALE: 1.0000 ' / in.	SHEET NO. OF SHEETS	STA. TO STA.	FED. ROAD DIST. NO.	ILLINOIS	FED. AID PROJECT	

PLOT DATE = Thu Nov 13 11:30:30 2014

AUTOMATIC FLAP GATE

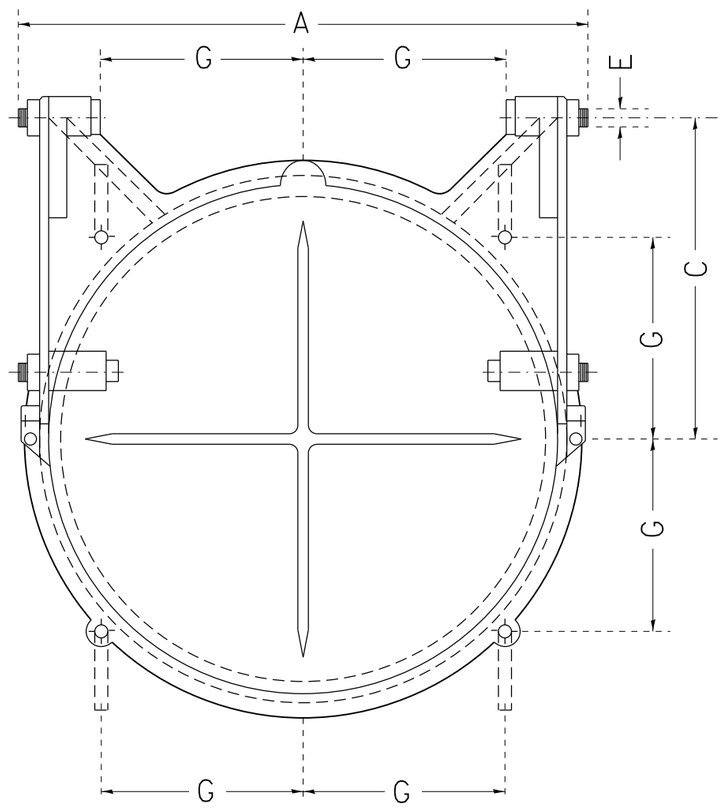

FRONT ELEVATION

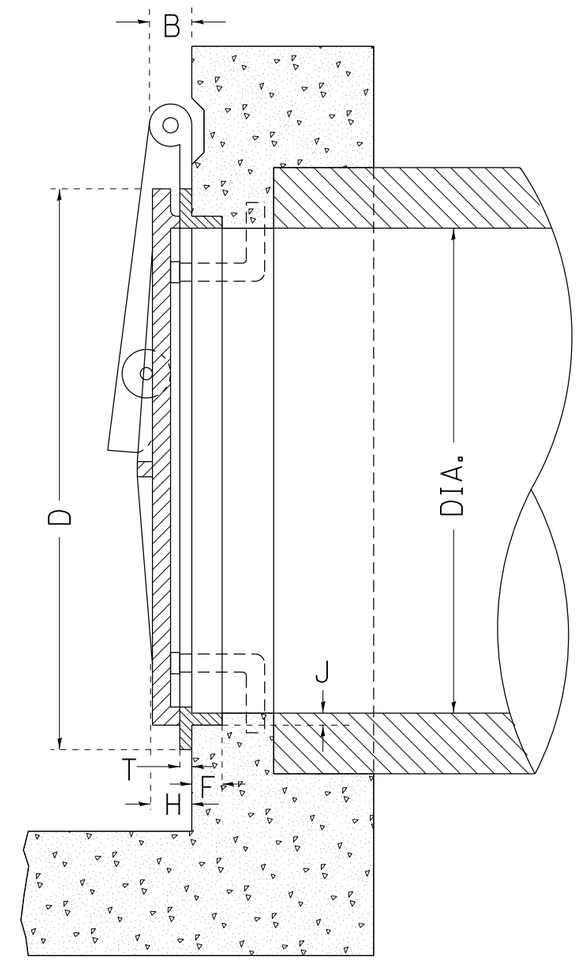

SECTION

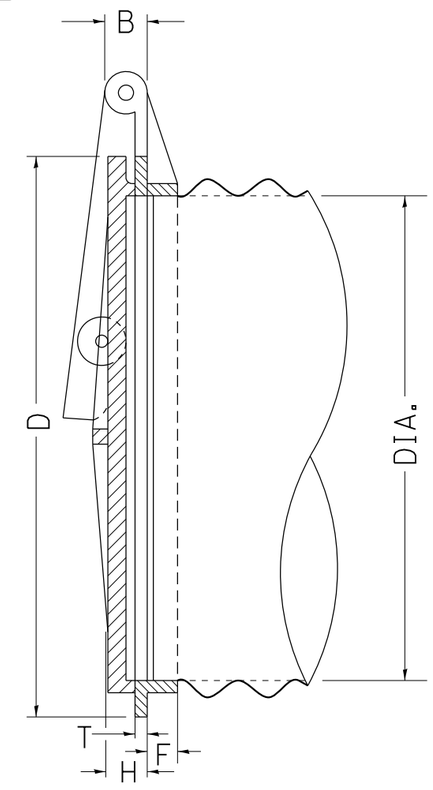

SECTION SHOWING METHOD OF APPLICATION TO CORRUGATED METAL PIPE

IT IS INTENTED THAT THE AUTOMATIC FLAP GATES SHALL BE A COMMERCIAL PRODUCT PRODUCED BY A RELIABLE MANUFACTURER. THE GATE MAY BE MADE OF CAST IRON, CAST STEEL OR OTHER SUITABLE MATERIALS. THE DESIGN MAY DIFFER FROM THE DRAWING IF IT WILL WORK IN A SATISFACTORY, TROUBLE FREE MANNER AND WILL WITHSTAND THE WATER PRESSURE AT THE INSTALLATION LOCATION. THE GATE SHALL BE APPROVED BY THE ENGINEER.

THE SIZE OF AUTOMATIC FLAP GATES SHALL REFER TO THE DIAMETER OF THE OUTLET PIPE OR OPENING.

THIS WORK SHALL BE PAID FOR AT THE CONTRACT UNIT PRICE EACH FOR FLAP GATE OF THE SIZE SPECIFIED AND SHALL INCLUDE ALL MATERIALS AND COMPLETE INSTALLATION.

ALL DIMENSIONS ARE IN INCHES
UNLESS OTHERWISE NOTED.

TABLE OF DIMENSIONS

DIAM	A	B	C	D	E	F	G	H	J	T
8	10 3/4	1 3/8	5 11/16	10	1/2	1 1/8	3 9/16	1 1/4	3/8	3/8
10	12 3/4	1 3/8	7 1/8	12 1/4	1/2	1 1/8	4 3/8	1 1/2	1/2	7/16
12	14 3/4	1 3/8	8 1/2	14 1/2	1/2	1 1/8	5 1/8	1 1/2	1/2	1/2
14	17 1/4	1 3/8	9 7/8	16 3/4	1/2	1 1/4	5 15/16	1 1/2	1/2	9/16
15	17 3/4	1 3/8	10 5/8	17 3/4	1/2	1 1/4	6 1/4	1 1/2	1/2	9/16
16	19 1/4	1 3/8	11 1/4	18 3/4	1/2	1 1/4	6 5/8	1 1/2	1/2	9/16
18	22 1/4	2	12 5/8	21	3/4	1 9/16	7 7/16	1 3/4	9/16	9/16
20	24 3/4	2	14 1/8	23 3/4	3/4	1 3/8	8 1/4	1 3/4	5/8	5/8
21	25 1/4	2	14 7/8	24 1/4	3/4	1 3/8	8 9/16	1 3/4	5/8	5/8
24	28 1/4	2	17	27 1/2	3/4	1 1/2	9 3/4	1 3/4	5/8	5/8
30	35 1/4	2 1/2	20 1/2	34	1	1 9/16	12	2	1 1/16	5/8
36	41 1/2	2 1/2	25	40 7/8	1	2 1/16	14 7/16	2 1/4	1 1/8	11/16
42	47 1/2	2 1/2	29 3/4	47	1	2 5/16	16 5/8	2 1/4	1 1/8	3/4
48	53 1/2	2 1/2	34	54	1	2 3/4	19 1/16	2 1/4	1 3/8	3/4
54	60 3/4	2 1/2	38	62 1/4	1 1/4	2 3/4	22	3	1 1/2	7/8
60	67	2 1/2	42	68 1/2	1 1/4	2 3/4	24 1/4	3	1 1/2	15/16
66	73 3/8	2 1/2	47	75	1 1/4	2 7/8	26 1/2	3	1 1/2	1
72	79	2 1/2	51	82	1 1/4	3	29	3	1 1/2	1
78	86	2 1/2	55 1/4	88 3/4	1 1/4	3 1/2	31 3/8	3	1 5/8	1 1/8
84	92 1/2	3 1/2	59 1/2	95 1/2	1 1/2	3 1/2	33 3/4	3	1 3/4	1 1/4

PLOT DATE = Thu Nov 13 11:30:31 2014

REVISED - 10-14-11	**REGION 2 / DISTRICT 2 STANDARD**	F.A. RTE.	SECTION	COUNTY	TOTAL SHEETS / SHEET NO.
REVISED -					
REVISED -		CONTRACT NO.			
REVISED -	SCALE: 1.0000 ' / in. SHEET NO. OF SHEETS STA. TO STA.	FED. ROAD DIST. NO.	ILLINOIS	FED. AID PROJECT	

AUTOMATIC FLAP GATE 73.2

ENTRANCE SIGN FOR USE WITH TEMPORARY SIGNALS

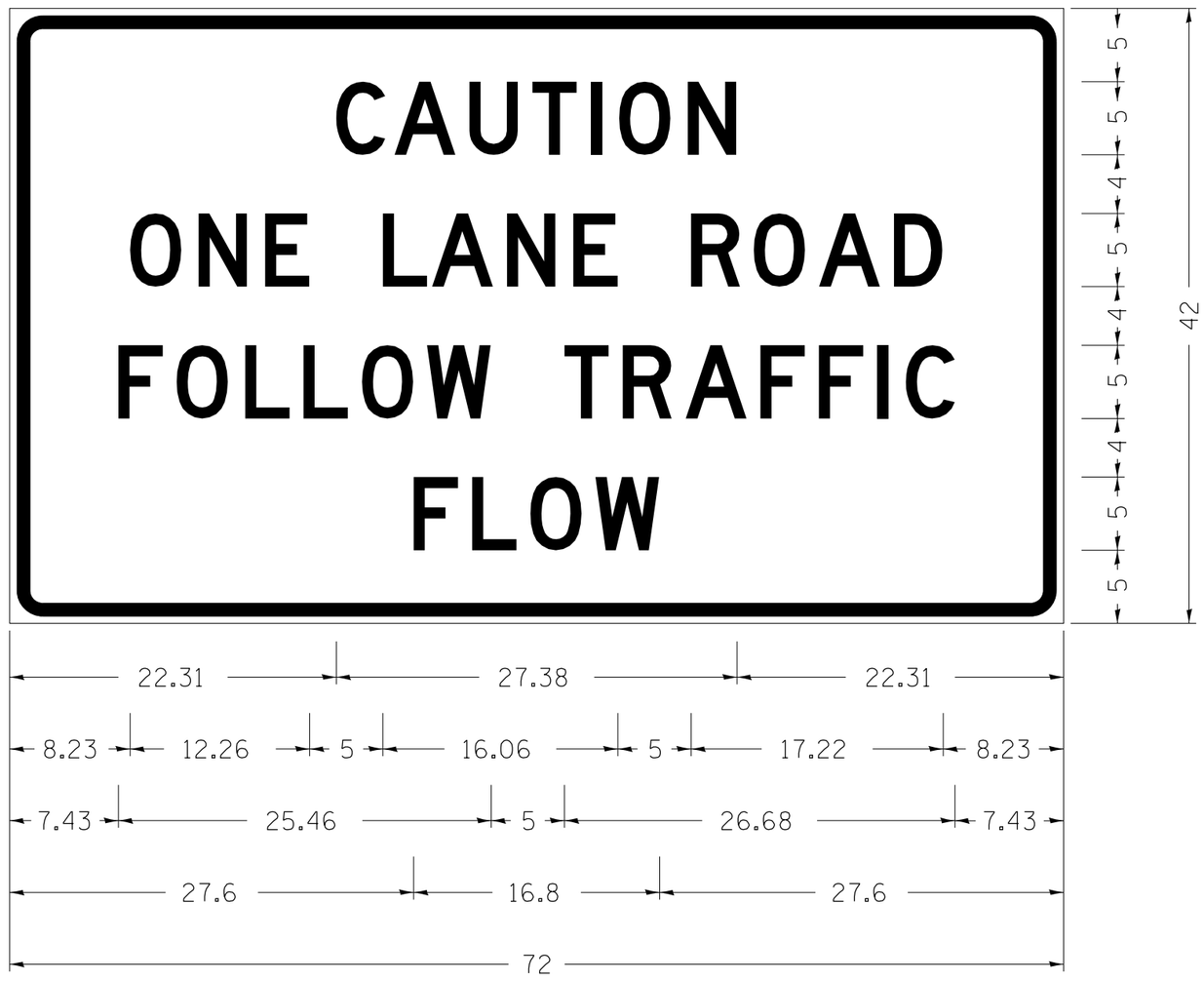

Type AA Fluorescent Orange Sheeting ;
2.25" Radius, 0.88" Border, 0.50" Indent, Black on Orange;
[CAUTION] D; [ONE LANE ROAD] D;
[FOLLOW TRAFFIC] D; [FLOW] D

Table Of Widths And Spaces

	C		A		U		T		I		O		N	
22.31	3.36	0.62	4.18	0.94	3.36	0.94	3.04	0.94	0.78	1.17	3.52	1.17	3.36	22.31

	O		N		E
8.23	3.51	1.17	3.36	1.18	3.04

	L		A		N		E
5.00	3.05	0.31	4.18	0.94	3.36	1.17	3.05

	R		O		A		D	
5.00	3.36	0.93	3.52	0.94	4.18	0.93	3.36	8.23

	F		O		L		L		O		W
7.43	3.04	0.94	3.52	1.17	3.04	0.94	3.05	0.94	3.51	0.94	4.37

	T		R		A		F		F		I		C	
5.00	3.05	0.94	3.36	0.94	4.18	0.93	3.05	0.94	3.04	0.94	0.78	1.18	3.35	7.43

	F		L		O		W	
27.60	3.05	0.94	3.04	0.94	3.52	0.93	4.38	27.60

GENERAL NOTES

THIS SIGN SHALL BE INSTALLED AT ENTRANCES LOCATED BETWEEN THE TEMPORARY SIGNALS AS DIRECTED BY THE ENGINEER.

ALL DIMENSIONS ARE IN INCHES UNLESS OTHERWISE NOTED.

THE COST TO FURNISH, INSTALL AND REMOVE THIS SIGN AT THE REQUIRED LOCATIONS SHALL BE INCLUDED IN THE COST OF TRAFFIC CONTROL AND PROTECTION STANDARD 701321.

ALL DIMENSIONS ARE IN INCHES UNLESS OTHERWISE NOTED.

PLOT DATE = Thu Nov 13 11:30:31 2014

REVISED - 10-14-11	REGION 2 / DISTRICT 2 STANDARD	F.A. RTE.	SECTION	COUNTY	TOTAL SHEETS	SHEET NO.
REVISED -						
REVISED -				CONTRACT NO.		
REVISED -	SCALE: 1.0000 ' / in. SHEET NO. OF SHEETS STA. TO STA.	FED. ROAD DIST. NO.	ILLINOIS	FED. AID PROJECT		

RIPRAPPED CULVERT ENERGY BASIN

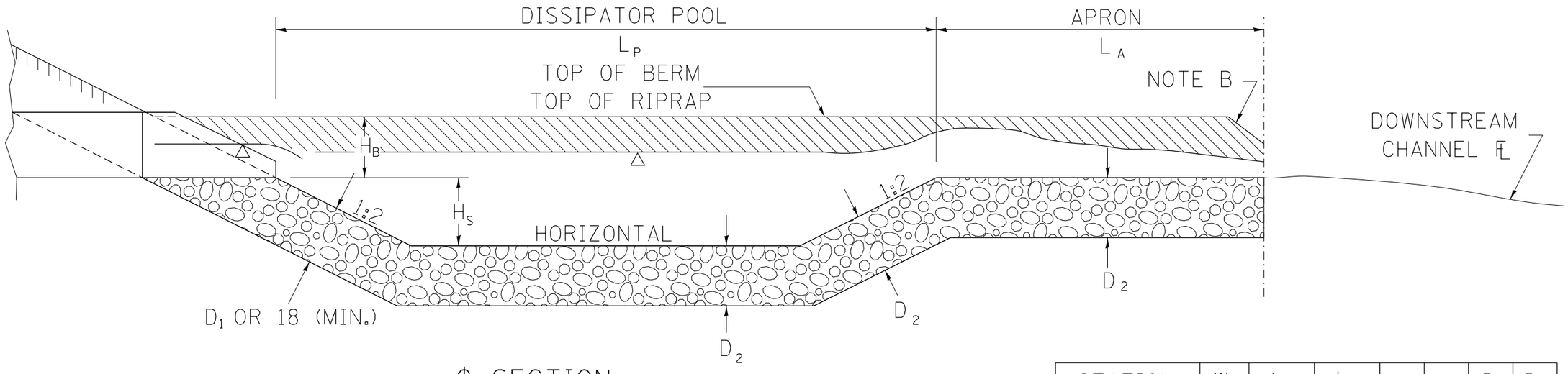

℄ SECTION

STATION	W_O	L_P	L_A	H_S	H_B	D_1	D_2

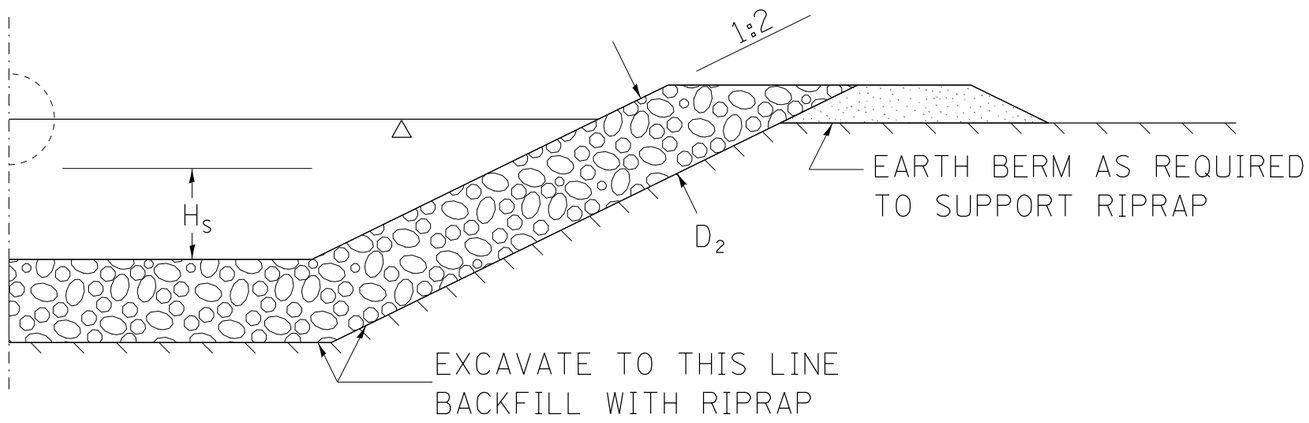

SECTION A-A

NOTE B: WARP BASIN TO CONFORM TO NATURAL STREAM CHANNEL.

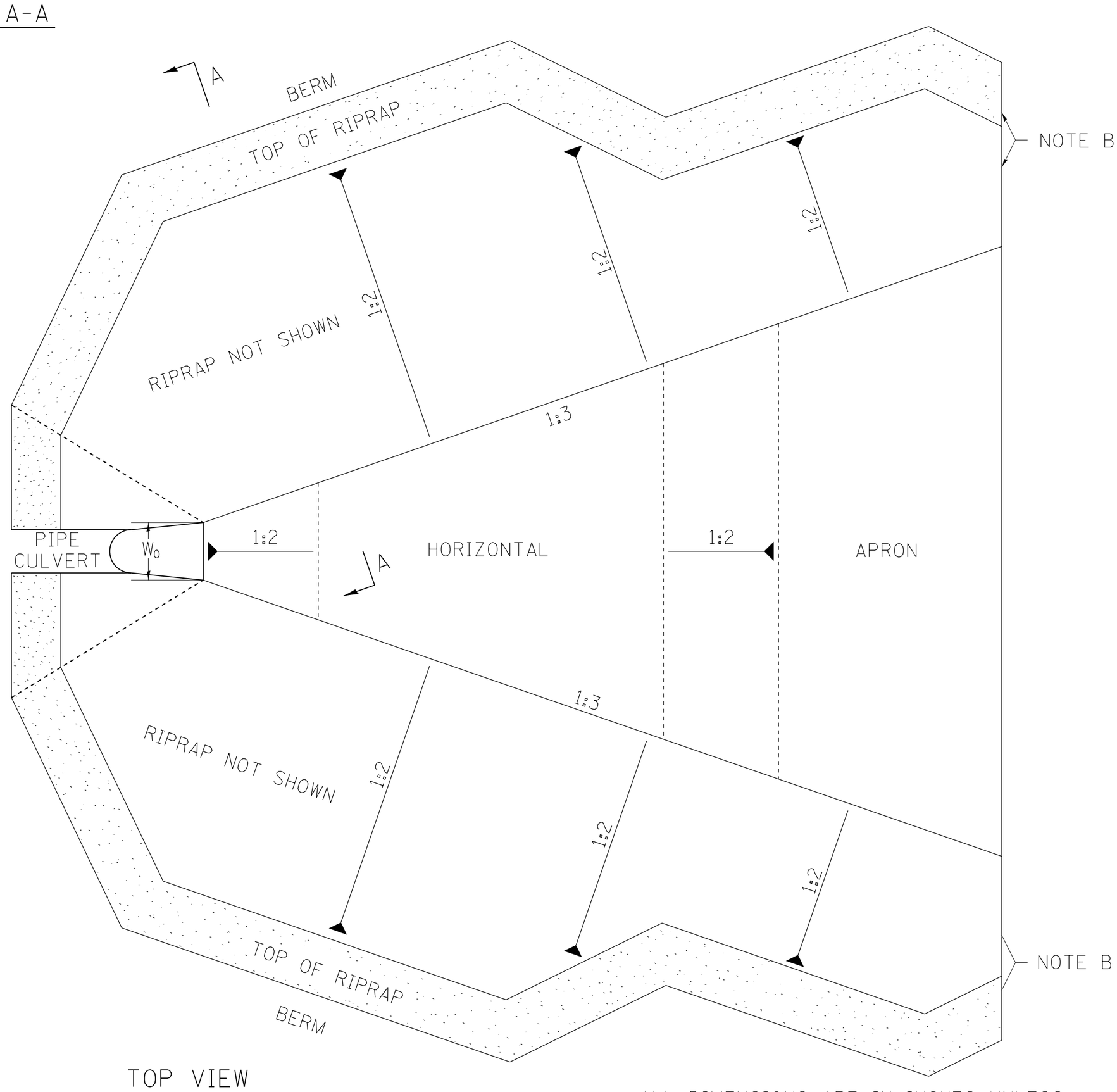

TOP VIEW

ALL DIMENSIONS ARE IN INCHES UNLESS OTHERWISE NOTED.

REVISED - 10-14-11	REGION 2 / DISTRICT 2 STANDARD			F.A. RTE.	SECTION	COUNTY	TOTAL SHEETS / SHEET NO.
REVISED -							
REVISED -						CONTRACT NO.	
REVISED -	SCALE: 1.0000 ' / in.	SHEET NO. OF SHEETS	STA. TO STA.	FED. ROAD DIST. NO.	ILLINOIS	FED. AID PROJECT	

PLOT DATE = Thu Nov 13 11:30:32 2014

NAME PLATE FOR CULVERTS

FOR 24''-42'' PIPE CULVERTS

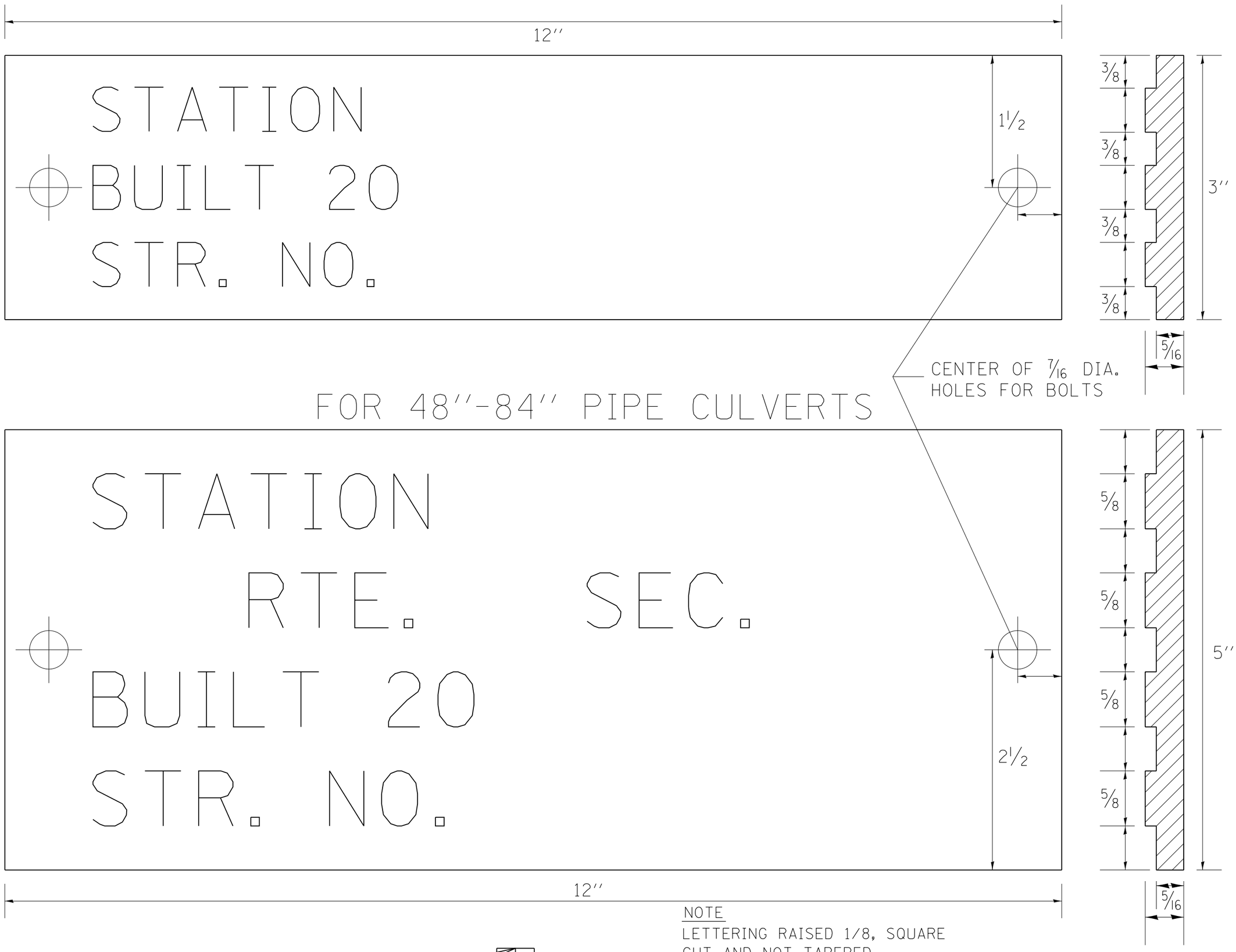

NOTE
LETTERING RAISED 1/8, SQUARE
CUT AND NOT TAPERED

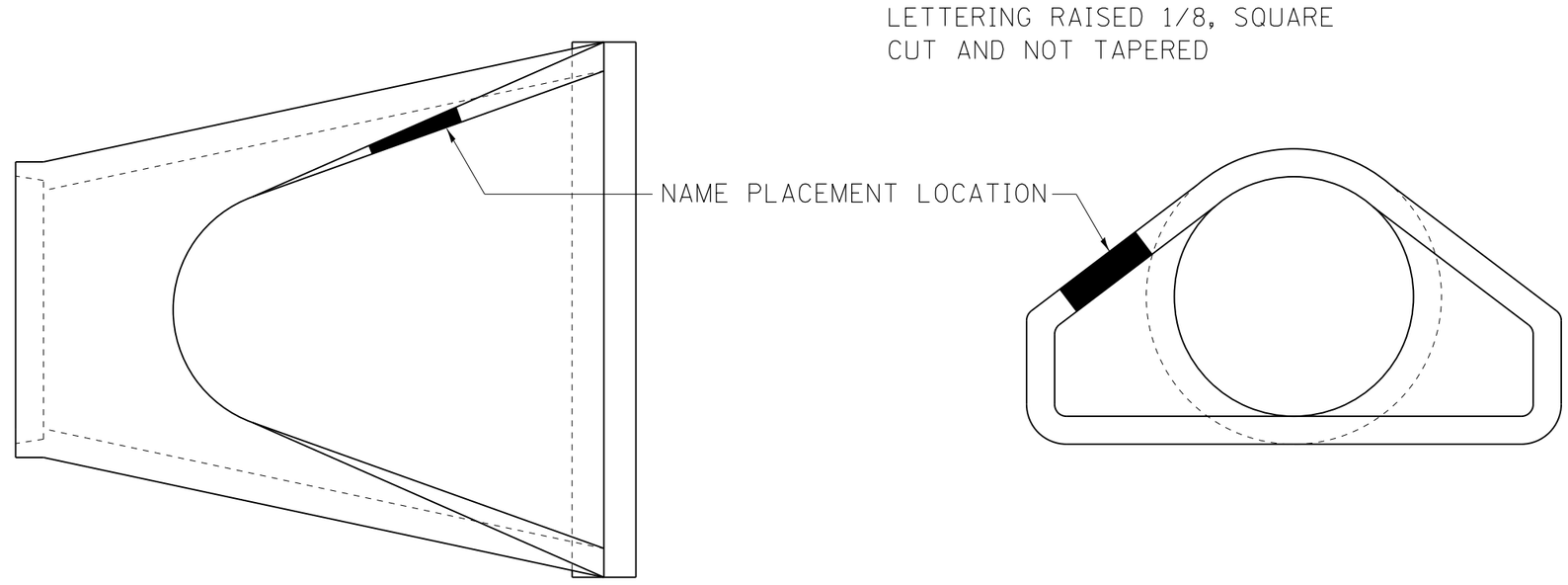

DESIGNERS NOTE

NAME PLATES SHALL BE FURNISHED & INSTALLED ACCORDING TO SECTION 515 OF THE STANDARD SPECIFICATIONS, EXCECT 2 BOLTS SHALL BE USE TO FASTEN THE PLATE TO THE END SECTION.

USE STANDARD 515001 FOR BRIDGES AND MULTI-CELL CULVERTS WITH SPANS OF 20' OR MORE MEASURED ALONG THE CENTERLINE AT THE HIGHWAY.

USE THIS DETAIL FOR ALL OTHER PIPE CULVERTS & BOX CULVERTS WITH STRUCTURE NUMBERS. INCLUDE THE INFORMATION TO FILL OUT THE NAME PLATE FOR EACH CULVERT.

IN BOTH CASES INCLUDE A PAY ITEM FOR NAME PLATES.

STATION	STRUCTURE NO.

PLOT DATE = Thu Nov 13 11:30:33 2014

REVISED - 5-27-09	REGION 2 / DISTRICT 2 STANDARD			F.A. RTE.	SECTION	COUNTY	TOTAL SHEETS / SHEET NO.
REVISED -							
REVISED -						CONTRACT NO.	
REVISED -	SCALE: 1.0000 '/ in.	SHEET NO. OF SHEETS	STA. TO STA.	FED. ROAD DIST. NO.	ILLINOIS	FED. AID PROJECT	

TERMINATION OF DEAD END ROADS

NOTES: A "NO OUTLET" (36"x36" YELLOW) SIGN SHALL BE ERECTED SLIGHTLY BEYOND THE LAST ROAD INTERSECTING THE ROAD WITH NO OUTLET. IF THIS INTERSECTION IS MORE THAN 1500 FT FROM TERMINATION POINT, OR IF SIGHT DISTANCE TO THE CLOSURE IS LESS THAN 500 FT , A ROAD ENDS 500 FT (WB-16) SIGN SHALL BE ERECTED 500 FT IN ADVANCE OF THE TERMINATION OF THE ROAD. THIS WORK WILL BE PAID FOR AT THE CONTRACT UNIT PRICE PER EACH FOR "TERMINATION OF DEAD END ROADS" WHICH PRICE SHALL INCLUDE ALL LABOR, MATERIALS AND EQUIPMENT NECESSARY TO INSTALL THE SIGNS AND DELINEATORS.

USE 4X6 WOOD POSTS INSTALLED IN ACCORDANCE WITH SECTION 730 OF STANDARD SPECIFICATIONS FOR TRAFFIC CONTROL ITEMS. USE APPLICABLE PARTS OF STANDARD 720001 FOR SIGN MOUNTING.

ALL DIMENSIONS ARE IN INCHES UNLESS OTHERWISE NOTED.

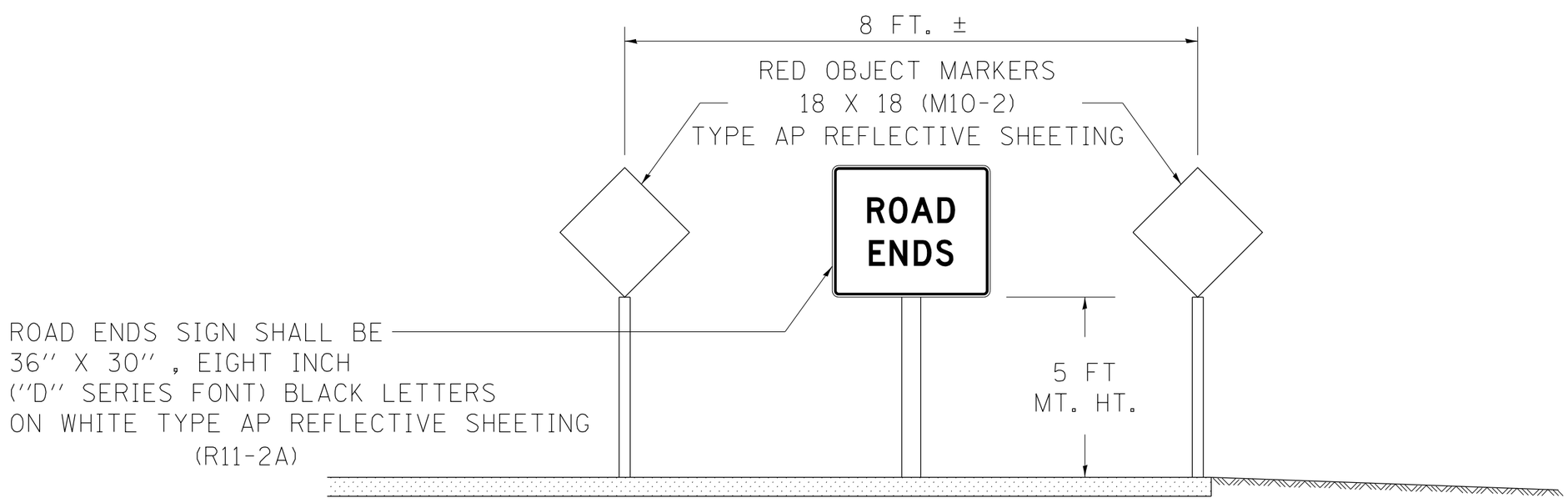

TERMINATION SIGNING

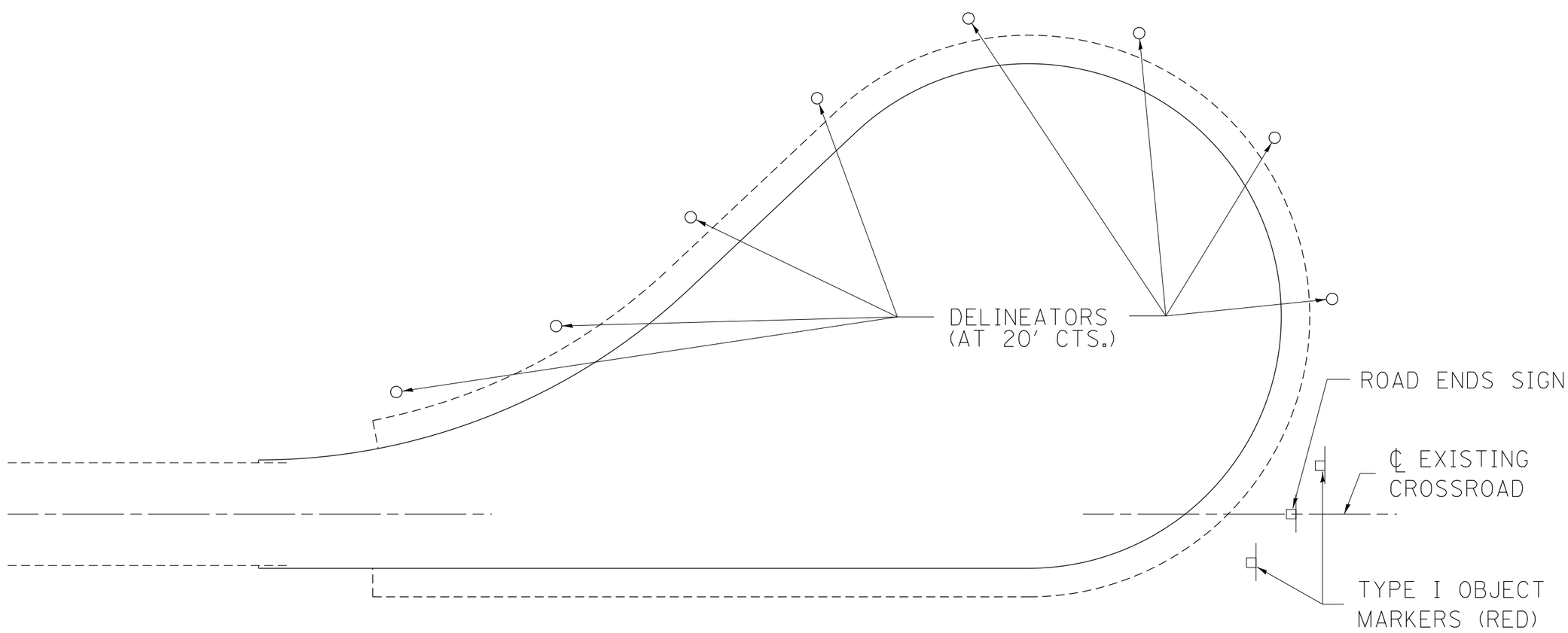

TRAFFIC CONTROL
TYPICAL CUL-DE-SAC

PLOT DATE = Thu Nov 13 11:30:33 2014

REVISED - 11-12-14	REGION 2 / DISTRICT 2 STANDARD			F.A. RTE.	SECTION	COUNTY	TOTAL SHEETS	SHEET NO.
REVISED - 10-14-11								
REVISED -						CONTRACT NO.		
REVISED -	SCALE: 1.0000 ' / in.	SHEET NO. OF SHEETS	STA. TO STA.	FED. ROAD DIST. NO.	ILLINOIS	FED. AID PROJECT		

MECHANICAL JOINTS FOR CONCRETE PIPE AND BOX CULVERTS

THE CULVERT TIES SHALL BE INCLUDED IN THE COST OF THE CONCRETE PIPE CULVERTS OR THE PRECAST CONCRETE BOX CULVERT. THE MECHANICAL TIES SHALL BE ON THE OUTSIDE OF THE CULVERT. THE NUTS AND WASHERS SHALL BE PLACED ON THE INSIDE OF OF THE CULVERT AND COVERED WITH MASTIC JOINT SEALER CONFORMING TO SECTIONS 1055 OR 1056 IN THE STANDARD SPECIFICATIONS FOR ROAD AND BRIDGE CONSTRUCTION.

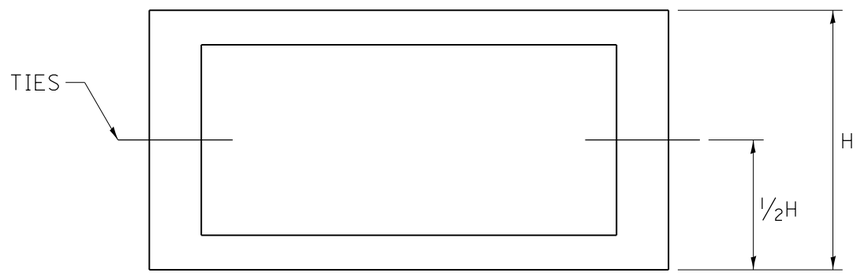

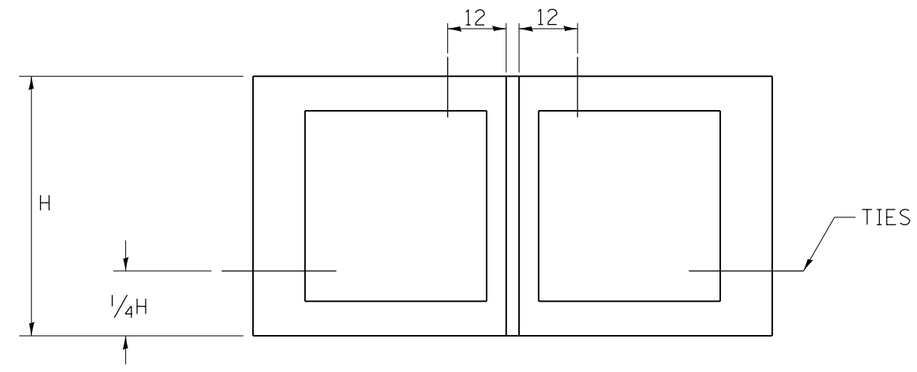

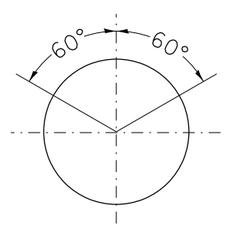

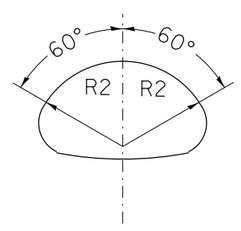

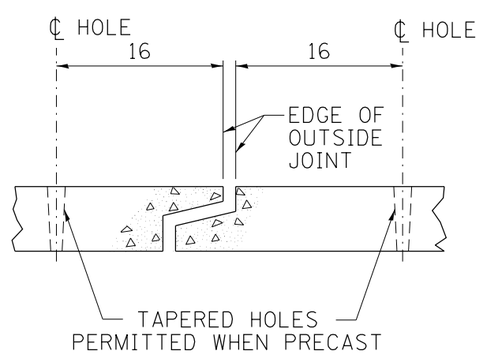

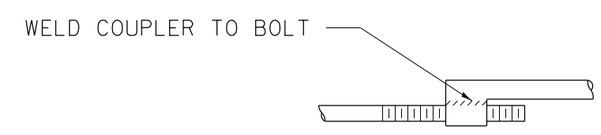

TOP VIEW

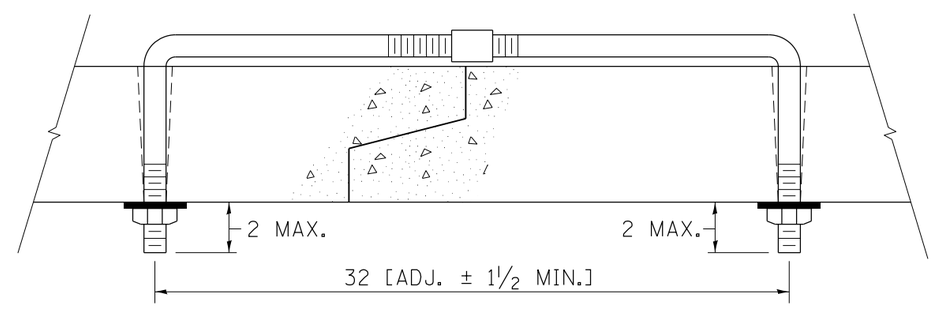

ADJUSTABLE TIE

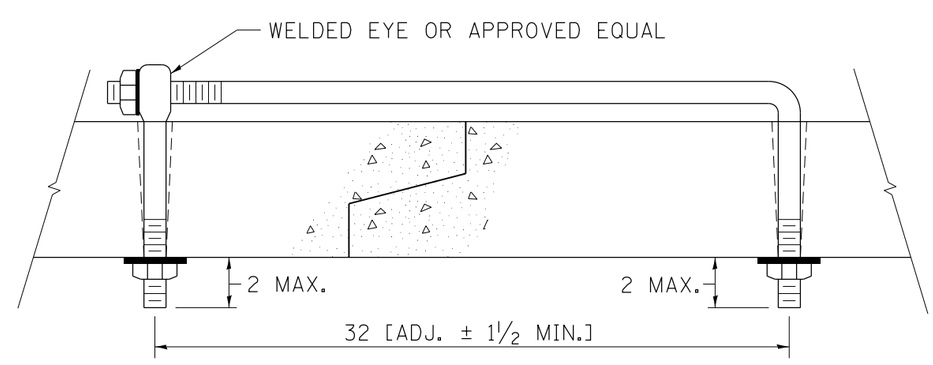

EYE BOLT TIE

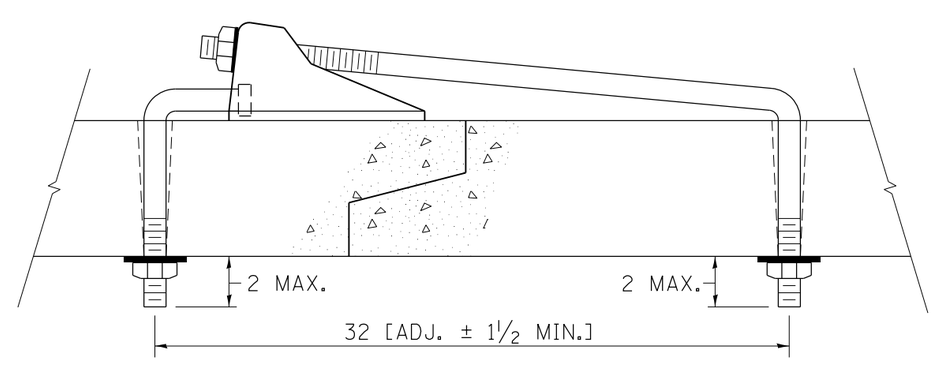

CANOPY TIE

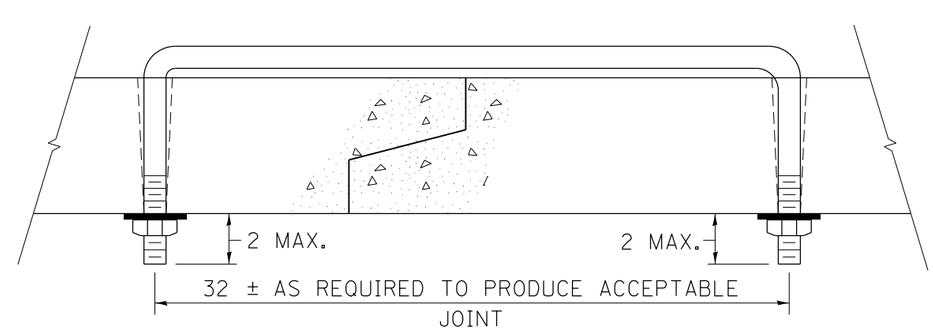

U BOLT TIE

PLACEMENT OF HOLES

BOX CULVERT FEET	PIPE SIZE INCHES	THREAD DIAMETER
	12	5/8 ROLLED THREADS (SEE NOTE 4)
	15	
	18	
	21	
	24	
	27	
	30	3/4 CUT OR ROLLED
3x2	33	
3x3	36	
4x2	42	
4x3	48	
4x4	54	
5x3	60	
5x4	66	
5x5	72	1 CUT OR ROLLED
6x *	78	
7x *	84	
8x *	90	
9x *	96	
10x *	102	
	108	
	120	
	132	
11 X * AND GREATER	138 AND GREATER	1 1/4

NOTES:

1. HOLES SHALL BE CAST-IN OR DRILLED 16 FROM OUTSIDE EDGE OF JOINT.
2. NUTS AND WASHERS ARE NOT REQUIRED ON INSIDE OF 27 DIAM. PIPE OR LESS.
3. TIES ARE NOT REQUIRED FOR BELL PIPE 24 AND SMALLER. ON OTHER SIZES TIE MAY BE INSERTED FROM INSIDE.
4. CUT THREADS MAY BE USED IF WASHER AND NUT ARE USED.
5. PIPE SIZE LISTED IS INSIDE DIAM. OF ROUND PIPE OR EQUIVALENT DIAM. OF PIPE ARCH OR ELLIPTICAL.
6. GALVANIZING OF TIES IS REQUIRED.
7. ALL DIMENSIONS ARE IN INCHES UNLESS OTHERWISE NOTED.

PLOT DATE = Thu Nov 13 11:30:34 2014

REVISED - 11-12-14	REGION 2 / DISTRICT 2 STANDARD	F.A. RTE.	SECTION	COUNTY	TOTAL SHEETS / SHEET NO.
REVISED - 10-14-11					
REVISED -				CONTRACT NO.	
REVISED -	SCALE: 1.0000 ' / in. / SHEET NO. OF SHEETS / STA. TO STA.	FED. ROAD DIST. NO.	ILLINOIS	FED. AID PROJECT	

ROUGH GROOVED SURFACE SIGN

ILLINOIS STANDARD W8-I107

SIGN PANEL TYPE 1

COLOR: LEGEND AND BORDER - BLACK NON-RELFLECTIVE
BACKGROUND - ORANGE REFLECTORIZED

SIGN SIZE	DIMENSIONS							
	A	B	C	D	E	F	G	H
48x48	48.0	24.1	3.0	34.0	33.0	6.0	13.0	3.5

SIGN SIZE	SERIES LINES			MARGIN	BORDER	BLANK STD.
	1	2	3			
48x48	7C	7C	7C	0.8	1.2	B4-48D

ALL DIMENSIONS IN INCHES.

GENERAL NOTES

SIGN PANELS AND FACE MATERIALS SHALL BE ACCORDING TO SECTION 720 OF THE STANDARD SPECIFICATIONS

METAL POSTS SHALL BE IN ACCORDANCE WITH STD. 720011.

ALL MOUNTING HARDWARE SHALL BE ALUMINUM, STAINLESS STEEL, ZINC OR CADMIUM PLATED STEEL AND SHALL BE INCLUDED TO THE COST OF THE INSTALLATION.

ALL DIMENSIONS ARE IN INCHES UNLESS OTHERWISE NOTED.

PLOT DATE = Thu Nov 13 11:30:35 2014

REVISED - 10-14-11	REGION 2 / DISTRICT 2 STANDARD	F.A. RTE.	SECTION	COUNTY	TOTAL SHEETS / SHEET NO.
REVISED -					
REVISED -		CONTRACT NO.			
REVISED -	SCALE: 1.0000 ' / in. / SHEET NO. OF SHEETS / STA. TO STA.	FED. ROAD DIST. NO.	ILLINOIS	FED. AID PROJECT	

TYPICAL AGGREGATE BASE SIDEROAD

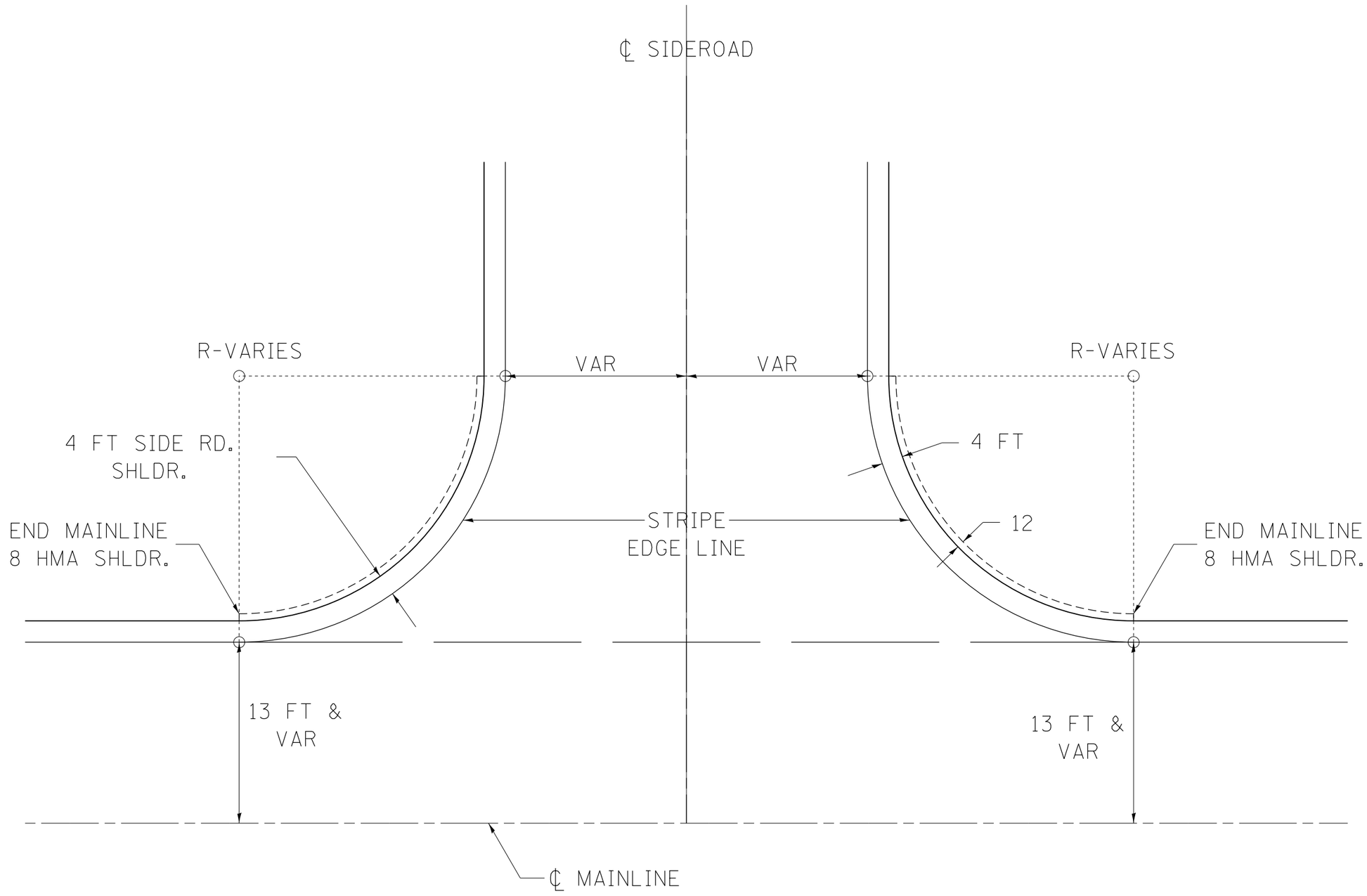

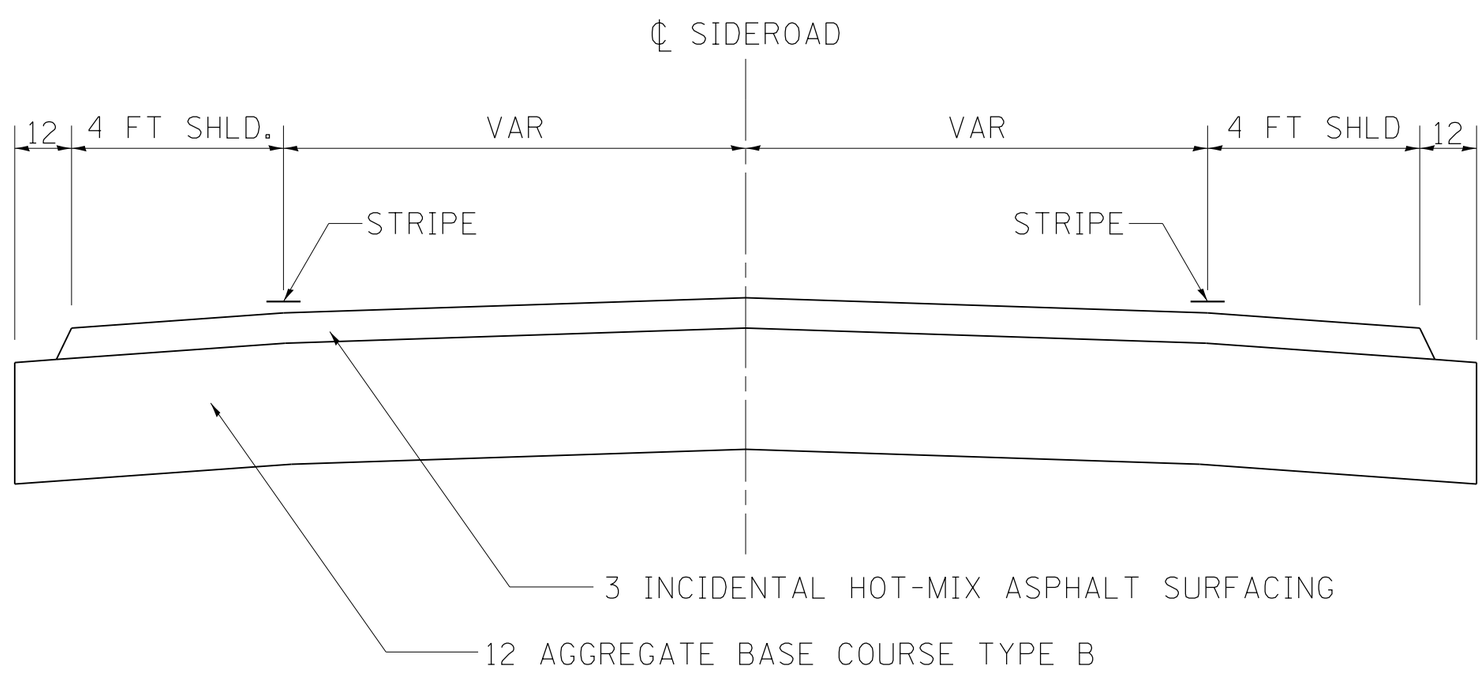

ALL DIMENSIONS ARE IN INCHES UNLESS
OTHERWISE NOTED.

PLOT DATE = Thu Nov 13 11:30:35 2014

REVISED - 10-14-11	**REGION 2 / DISTRICT 2 STANDARD**			F.A. RTE.	SECTION	COUNTY	TOTAL SHEETS	SHEET NO.
REVISED -								
REVISED -						CONTRACT NO.		
REVISED -	SCALE: 1.0000 ' / in.	SHEET NO. OF SHEETS	STA. TO STA.	FED. ROAD DIST. NO.	ILLINOIS	FED. AID PROJECT		

TYPICAL AGGREGATE BASE SIDEROAD **93.2**

TRAFFIC CONTROL AND PROTECTION AT TURN BAYS (TO REMAIN OPEN TO TRAFFIC)

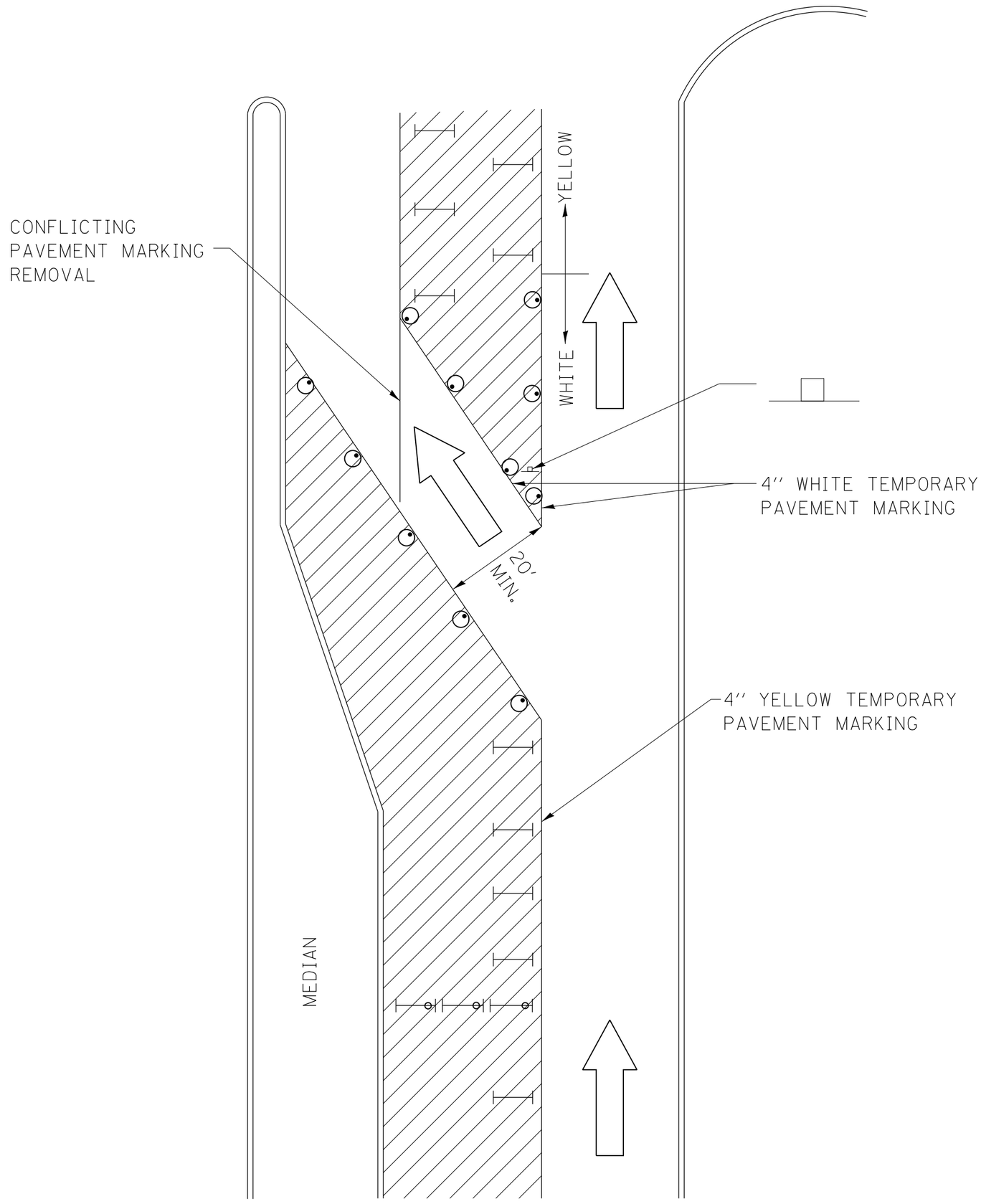

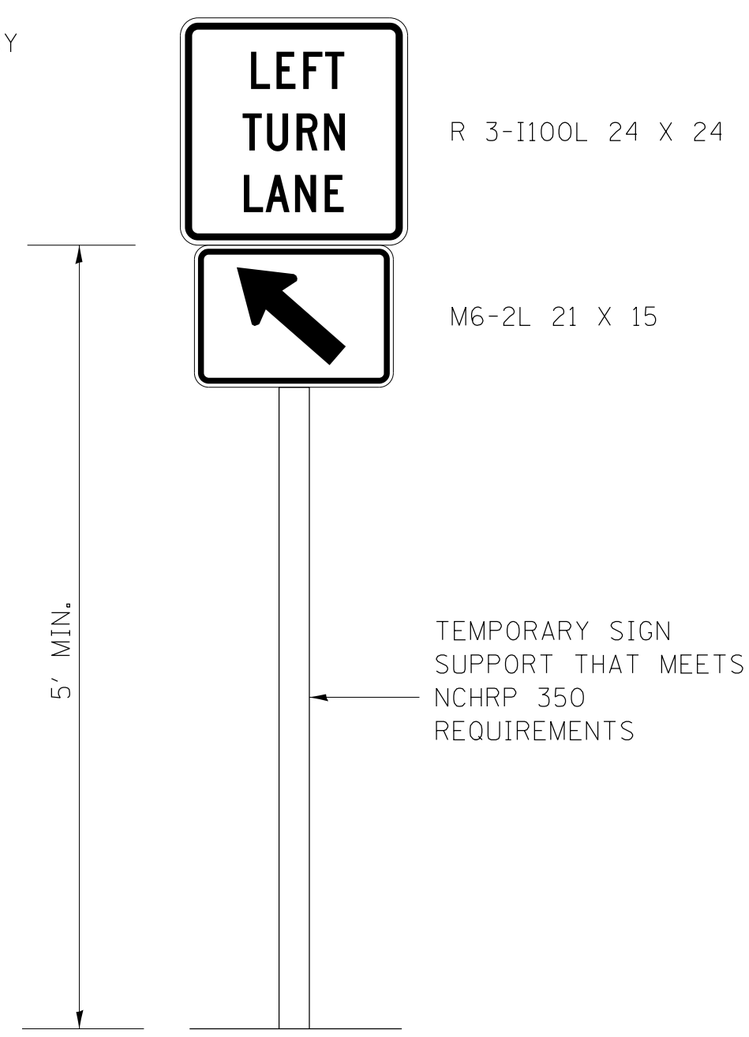

LEGEND

WORK AREA

LANE OPEN TO TRAFFIC

TYPE I OR II BARRICADE OR DRUM WITH FLASHING BURNING LIGHT

DRUM OR BARRICADE WITH STEADY BURN LIGHT

SIGN (SEE DETAIL)

TYPE I OR II CHECK BARRICADE WITH STEADY LIGHT BURN

GENERAL NOTES

CONES MAY BE SUBSTITUTED FOR BARRICADES OR DRUMS AT HALF THE SPACING DURING DAY OPERATIONS. CONES SHALL BE A MINIMUM OF 28 IN HEIGHT.

STEADY BURNING LIGHTS WILL NOT BE REQUIRED ON BARRICADES OR DRUMS FOR DAY OPERATIONS. ALL LIGHTS WILL BE MONODIRECTIONAL.

TEMPORARY PAVEMENT MARKING SHALL BE PLACED THROUGHOUT THE BARRICADED AREA OF EACH BAY WHERE THE CLOSURE TIME IS GREATER THAN FOURTEEN DAYS.

THIS APPLICATION ALSO APPLIES WHEN WORK IS BEING PERFORMED IN THE RIGHT LANE(S) AND THE RIGHT TURN BAY IS TO REMAIN OPEN. UNDER THIS CONDITION, "RIGHT TURN LANE" R3-100 24 X 24 AND M6-2R 21 X 15 SHALL BE USED.

THESE CONTROLS SHALL SUPPLEMENT MAINLINE TRAFFIC CONTROL FOR LANE CLOSURES. LONGITUDINAL DIMENSIONS MAY BE ADJUSTED TO FIT FIELD CONDITIONS.

TRAFFIC CONTROL AND PROTECTION AT TURN BAYS (TO REMAIN OPEN TO TRAFFIC) SHALL BE INCLUDED IN THE COST SPECIFIED TRAFFIC CONTROL STANDARDS OR ITEMS.

ALL DIMENSIONS ARE IN INCHES UNLESS OTHERWISE NOTED.

PLOT DATE = Thu Nov 13 11:30:36 2014

REVISED - 10-14-11	**REGION 2 / DISTRICT 2 STANDARD**			F.A. RTE.	SECTION	COUNTY	TOTAL SHEETS	SHEET NO.
REVISED -								
REVISED -						CONTRACT NO.		
REVISED -	SCALE: 1.0000 ' / in.	SHEET NO. OF SHEETS	STA. TO STA.	FED. ROAD DIST. NO.	ILLINOIS	FED. AID PROJECT		