DISTRICT 2 STANDARDS

11-12-14

FULL SIZE

1.1 Typical Furrowed Roadway Slopes
3.1 Mailbox Turnout in Curb and Gutter Section
4.1 PC Concrete Islands and Medians Accessible to the Disabled
5.1 Standard Outlet for Curb and Gutter
10.1 Box Culvert End Sections
11.1 Concrete End Sections for Parallel Pipe Culverts 15” thru 84” Dia.
12.1 Concrete End Sections for Parallel Pipe Arch Culverts 15” thru 84” Dia.
13.1 Traversable Pipe Grate for Box Culvert End Section
14.1 Traversable Pipe Grate for Parallel Drainage Structure
15.1 Sloped Metal End Sections with Grate
20.1 Hot-Mix Asphalt Approaches and Mailbox Returns
25.1 Entrance Approaches – Urban Area
32.1 Sewer and Water Main Crossings
33.1 Concrete Collars for Pipe or Box Culvert Extensions
35.1 Urban Lane Inside Closure, Multilane, 2W, with Mountable Median
36.1 Temporary Road Closure Expressway
37.1 Traffic Control for Three Lane Section
38.1 Traffic Control for Transition Areas
39.1 Traffic Control Typical Weave
40.1 Traffic Control for Road Closure
40.1a Traffic Control for Road Closure with Side Road within 150’ of Closure
41.1 Typical Pavement Markings
44.1 Painting Details
53.1 Remove and Re-erect Steel Plate Beam Guardrail
54.1 Traffic Barrier Terminal, Type 2 (27” height)
68.1 Slotted Drain Pipe (Variable Height)
71.1 Detail of Flood Gate
72.1 40’ Single Lane Median Crossover (45 mph Work Zone Speed Limit)
73.1 50’ Single Lane Median Crossover (45 mph Work Zone Speed Limit)
74.1 64’ Single Lane Median Crossover (45 mph Work Zone Speed Limit)
75.1 40’ Single Lane Median Crossover (55 mph Work Zone Speed Limit)
76.1 50’ Single Lane Median Crossover (55 mph Work Zone Speed Limit)
77.1 64’ Single Lane Median Crossover (55 mph Work Zone Speed Limit)
78.1 88’ Single Lane Median Crossover (55 mph Work Zone Speed Limit)
79.1 40’ Two Lane Median Crossover (45 mph Work Zone Speed Limit)
80.1 50’ Two Lane Median Crossover (45 mph Work Zone Speed Limit)
81.1 64’ Two Lane Median Crossover (45 mph Work Zone Speed Limit)
82.1 40’ Two Lane Median Crossover (55 mph Work Zone Speed Limit)
83.1 50’ Two Lane Median Crossover (55 mph Work Zone Speed Limit)
84.1 64’ Two Lane Median Crossover (55 mph Work Zone Speed Limit)
85.1 88’ Two Lane Median Crossover (55 mph Work Zone Speed Limit)
86.1 Beveled Pipe & Guard Detail for Median Crossover
90.1 Traffic Barrier Terminal, Type 6B (Special)
92.1 Details of Planting and Bracing Trees

11-12-14

Full Size District 2 Standards

1.1	Include when foreslopes and/or backslopes are more than 10’ in height.
3.1	Use when a mailbox turnout is needed in a curb & gutter section and there isn’t a parking lane or a mail delivery lane.
4.1	Use this when there are cross walks that will go through an island or median. Specify which option the contractor is required to use when building the Concrete Median (Special).
5.1	Use this when you need an outlet for curb and gutter, other than type B-6.24
10.1	This is to be used whenever we have a precast box culvert.
11.1	This is to be used for pipe culverts, Class D under all sideroads.
12.1	This is to be used for EQRS pipe culverts, Class D under all sideroads.
13.1	Use this whenever a cross drainage box culvert end section needs traversable pipe grates. Also include Standard 542311.
14.1	Use this whenever you use District Standards 10.1, 11.1 & 12.1 and the culvert is within the main line clear zone.
15.1	Use this when a Class D pipe culvert is under an entrance or frontage road and the culvert is within the main line clear zone.
20.1	Include for rural entrances and sideroads on 3R projects, reconstruction projects, or for new entrances. Do not include on 3P or Smart resurfacing projects.
25.1	Include for urban entrances with curb & gutter on 3R projects, reconstruction projects, or for new entrances. Do not include on 3P or Smart resurfacing projects.
32.1	Include in urban projects with proposed storm sewers or water mains.
33.1	Use this for pipe or box culvert extensions. Fill in the information in the table for the Bill of Materials.
34.1	Use this when you have box culvert end sections.
35.1	Use this when it is necessary to close the inside lane on an urban project. Also include Highway Standard 701606 and the pay item for 701606.
36.1	Use this district standard for any short term closure of an expressway at a diamond interchange.
37.1	Use this district standard for work that will require a lane closure in a three lane section such as a truck climbing lane.
38.1	Use this district standard when there is a transition from a four lane section that transitions to a two lane section.

11-12-14

39.1	Include on 4 lane highways where the contractor may change a portion of the work to the opposite lane.
40.1	Include for a mainline road closure.
40.1a	Include for a mainline road closure when a sideroad is within 150' of the mainline closure.
41.1	Include in projects with pavement marking or raised reflective pavement markers.
44.1	Include in projects with pavement marking on entrance and exit ramps & cloverleafs.
53.1	Use this to remove and re-erect an old type steel plate beam guardrail which has 6" block outs and a 27½" rail height.
54.1	Use this when installing a Traffic Barrier Terminal, Type 2 on the old type of steel plate beam guardrail with a 27½" rail height.
68.1	This can be used to increase drainage in curb & gutter with very flat grades (less than 0.3%). Also include this when constructing median crossovers.
71.1	Use if a property owner has a fenced field with livestock and a stream or river. The flood gate will be placed near the right-of-way to prevent livestock from leaving the field through the waterway. During high water, the flood gate will open to let water and debris through.
72.1, 73.1, 74.1, 75.1, 76.1, 77.1, 78.1	Use on single lane median crossovers of the median width specified and for the work zone speed limit. Include District Standard 86.1.
79.1, 80.1, 81.1, 82.1, 83.1, 84.1, 85.1	Use on two lane median crossovers of the median width specified and for the work zone speed limit. Include District Standard 86.1.
86.1	Include this on median crossovers, District Standards 72.1, 73.1, 74.1, 75.1, 76.1, 77.1, 78.1, 79.1, 80.1, 81.1, 82.1, 83.1, 84.1, & 85.1.
90.1	Use this on 4-lane highways that go under dual structures and the piers required shielding. The outside of the piers are shielded with impact attenuators. The gap between the piers is shielded using Traffic Barrier Terminal Type 6B (Special). The Traffic Barrier Terminal Type 6B (Special) is required on both sides of the piers. Design Note: The **length** of the double thrie beam between the piers **must be added on the elevation on the District Standard**.
92.1	Include when planting new ball & burlapped trees.

TYPICAL FURROWED ROADWAY SLOPES

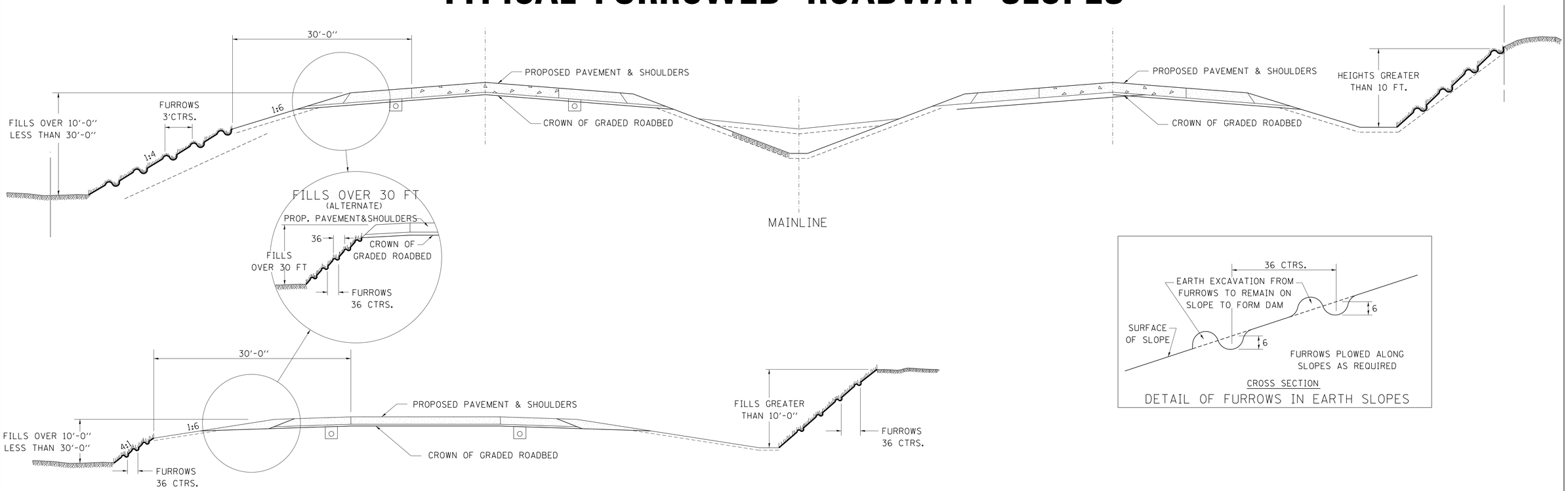

RAMPS

DETAIL OF FURROWS IN EARTH SLOPES

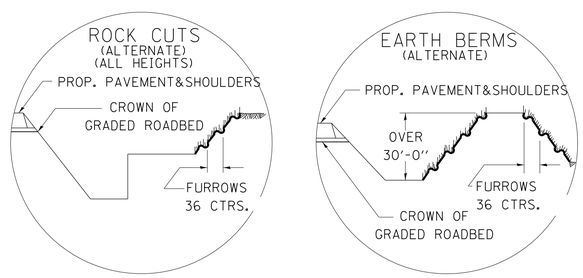

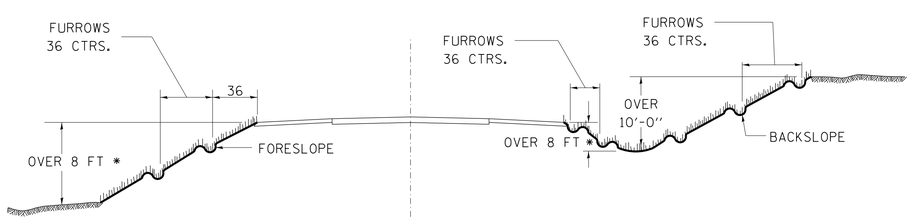

* IF FORESLOPES ARE SIMILAR TO MAINLINE OR RAMP CONFIGURATION, FURROW AS INDICATED FOR THOSE SLOPES.

CROSSROAD GRADE SEPERATIONS

GENERAL NOTES

IN GENERAL, THE ENTIRE EARTH SURFACE WITHIN THE RIGHT-OF-WAY SHALL BE SEEDED AND MULCHED.

NO AGRICULTURAL GROUND LIMESTONE SHALL BE APPLIED TO THE GRADED ROADBED.

FORESLOPES AND/OR BACKSLOPES 10 FT. OR LESS IN HEIGHT WILL NOT REQUIRE FURROWING UNLESS OTHERWISE NOTED IN THE PLANS OR AS DIRECTED BY THE ENGINEER.

FORESLOPES AND/OR BACKSLOPES OVER 10 FT. IN HEIGHT SHALL BE FURROWED. THE OPERATION SHALL INCLUDE FINISHING THE SLOPES TO FINAL LINE AND GRADE, AS SHOWN ON THE CROSS SECTIONS BEFORE FURROWING IS DONE. FURROWS SHALL BE PLOWED ALONG A LEVEL LINE CONFORMING TO THE CONTOURS OF THE SLOPE. THE COST OF FURROWING SHALL BE CONSIDERED INCLUDED IN THE PROJECT COST AND NO ADDITIONAL COMPENSATION WILL BE ALLOWED.

SEQUENCE AND OPERATION FOR SEEDING, MULCHING AND FURROWING OF ROADWAY SLOPES:

1. SPREAD FERTILIZER.
2. PERFORM THE OPERATION OF GROUND PREPARATION.
3. PLOW FURROWS.
4. PERFORM THE OPERATION OF SEEDING. THE SEED SHALL BE SOWN ON THE SURFACE OF THE PREPARED GROUND AFTER FURROWING.
5. THE OPERATION OF COVERING THE SEED, BY HARROWING OR OTHER MEANS, SHALL BE PERFORMED ONLY IF SO DIRECTED BY THE ENGINEER AND SHALL BE INCLUDED TO THE ITEM OF SEEDING.
6. SECTION 250 AND 251 OF THE STANDARD SPECIFICATIONS SHALL GOVERN THIS WORK EXCEPT AS NOTED HEREIN.

ALL DIMENSIONS ARE IN INCHES
UNLESS OTHERWISE NOTED.

FILE NAME = District 2 Standard	USER NAME = IDOT/District 2	DESIGNED -	REVISED - 10-17-11	STATE OF ILLINOIS DEPARTMENT OF TRANSPORTATION	REGION 2 / DISTRICT 2 STANDARD	F.A. RTE.	SECTION	COUNTY	TOTAL SHEETS / SHEET NO.
		DRAWN -	REVISED -						
	PLOT SCALE = 1.0000 ' / in.	CHECKED -	REVISED -					CONTRACT NO.	
	PLOT DATE = Thu Nov 13 11:28:45 2014	DATE -	REVISED -		SCALE: SHEET NO. OF SHEETS STA. TO STA.	FED. ROAD DIST. NO.	ILLINOIS	FED. AID PROJECT	

TYPICAL FURROWED ROADWAY SLOPES 1.1

MAILBOX TURNOUT IN CURB AND GUTTER SECTION

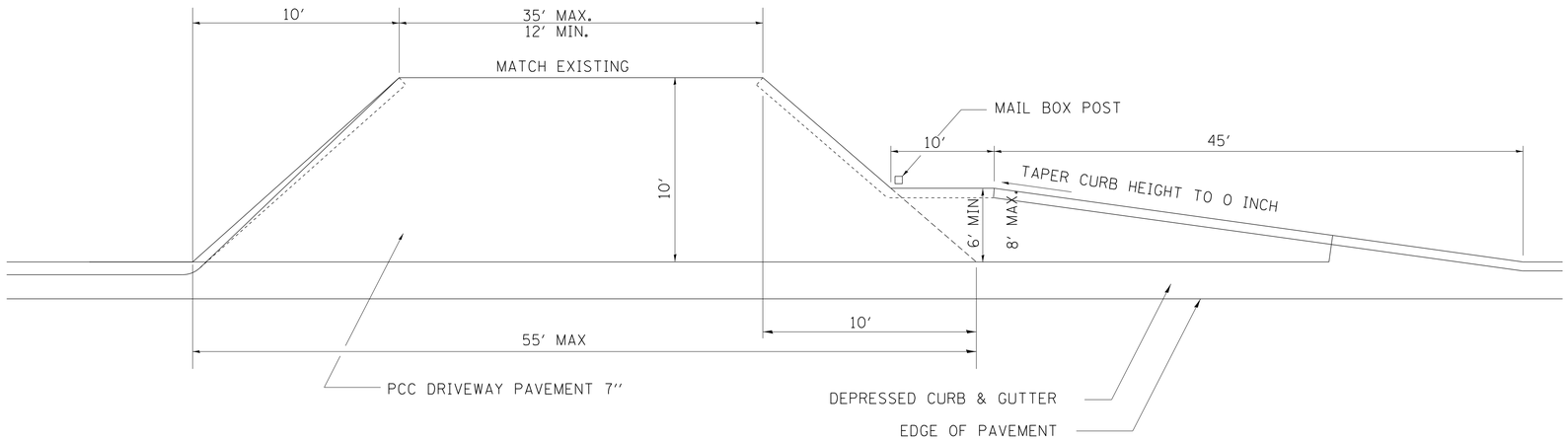

COMMERCIAL ENTRANCE WITH MAIL BOX TURNOUT

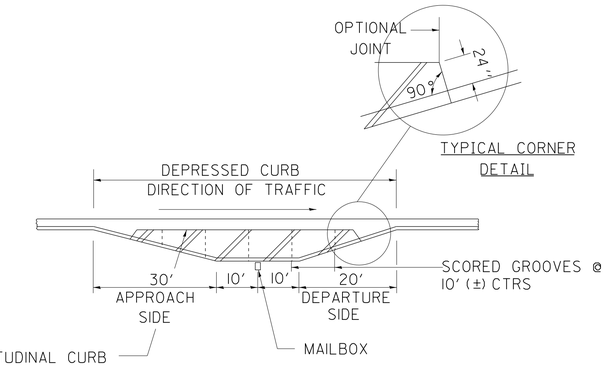

MAIL BOX TURNOUT

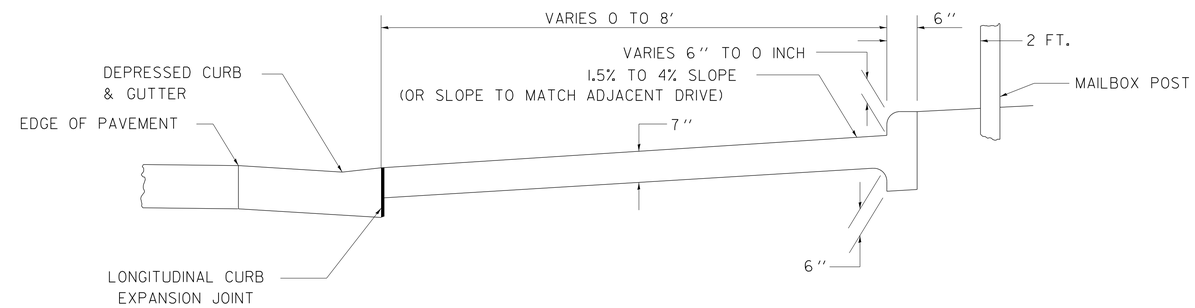

TYPICAL CROSS SECTION

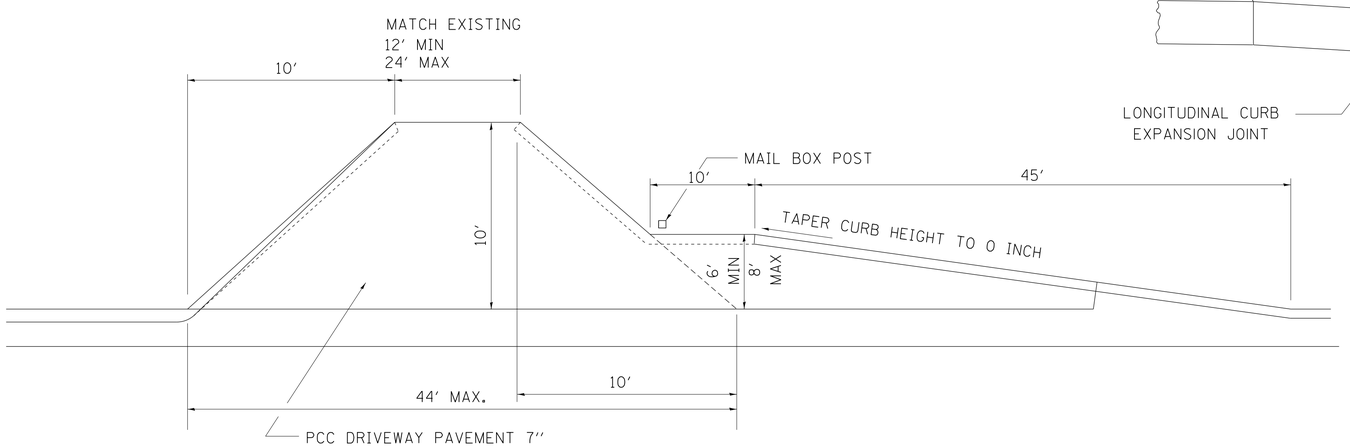

PRIVATE ENTRANCE WITH MAIL BOX TURNOUT

GENERAL NOTES

1.) THE LONGITUDINAL CURB EXPANSION JOINT SHALL CONFORM TO SECTION 1051 OF THE STANDARD SPECIFICATIONS.
2.) THE MAILBOX TURNOUT CROSS SLOPE WILL BE AS SHOWN ABOVE, AS SHOWN ON THE STATION CROSS SECTIONS OR AS DIRECTED BY THE ENGINEER.
3.) THE MAILBOX TURNOUT SHALL BE CONSTRUCTED WITH SCORED GROOVES, AS SPECIFIED IN ARTICLE 423.06 OF THE STANDARD SPECIFICATIONS, AT APPROXIMATELY 10 FT. CENTERS. IN THE EVENT THERE IS EXISTING OR PROPOSED SIDEWALK PRESENT, THESE SCORED GROOVES SHALL BE PLACED IN LINE WITH EVERY OTHER JOINT IN THE ADJACENT SIDEWALK.
4.) THE WORK WILL BE PAID FOR AT THE CONTRACT UNIT PRICE PER SQUARE YARD FOR P.C. CONCRETE DRIVEWAY PAVEMENT OF THE THICKNESS SPECIFIED IN THE PLANS WHICH PRICE SHALL INCLUDE THE LONGITUDINAL CURB EXPANSION JOINT, MONOLITHIC CURB AS SHOWN, SCORED GROOVES, AND NO ADDITIONAL COMPENSATION WILL BE ALLOWED.
5) SEE THE DISTRICT STANDARD 25.1 FOR ADDTIONAL DETAILS.

ALL DIMENSIONS ARE IN INCHES UNLESS OTHERWISE NOTED.

FILE NAME = District 2 Standard	USER NAME = IDOT/District 2	DESIGNED -	REVISED - 10-17-11	STATE OF ILLINOIS DEPARTMENT OF TRANSPORTATION	REGION 2 / DISTRICT 2 STANDARD	F.A. RTE.	SECTION	COUNTY	TOTAL SHEETS / SHEET NO.
		DRAWN -	REVISED -						
	PLOT SCALE = 1.0000 ' / in.	CHECKED -	REVISED -					CONTRACT NO.	
	PLOT DATE = Thu Nov 13 11:28:45 2014	DATE -	REVISED -		SCALE: SHEET NO. OF SHEETS STA. TO STA.	FED. ROAD DIST. NO.	ILLINOIS	FED. AID PROJECT	

PC CONCRETE ISLANDS AND MEDIANS ACCESSIBLE TO THE DISABLED

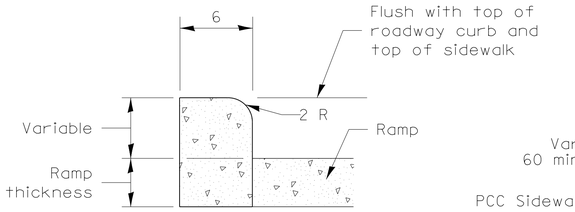

SIDE CURB DETAIL

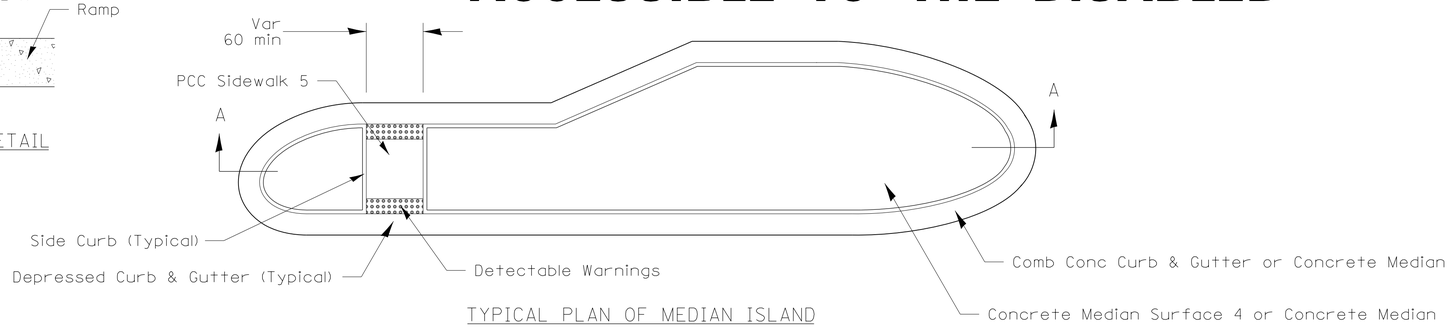

TYPICAL PLAN OF MEDIAN ISLAND

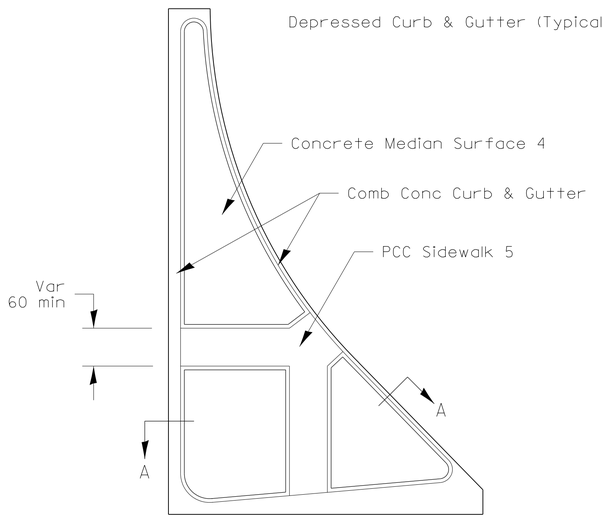

LARGE ISLAND

(Free Flow Design)

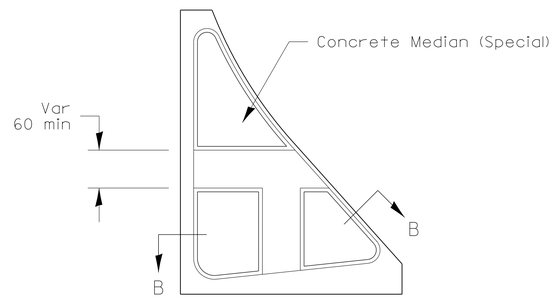

INTERMEDIATE ISLAND

(For Right Turn Lane Design)

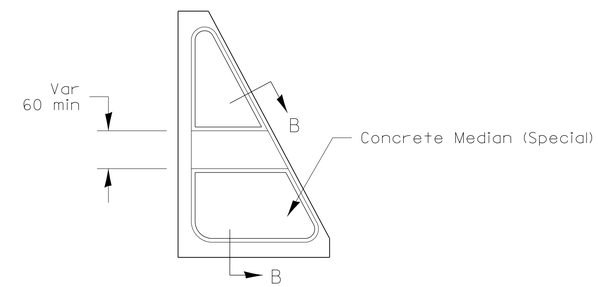

SMALL ISLAND

(For Typical Design)

SECTION A-A

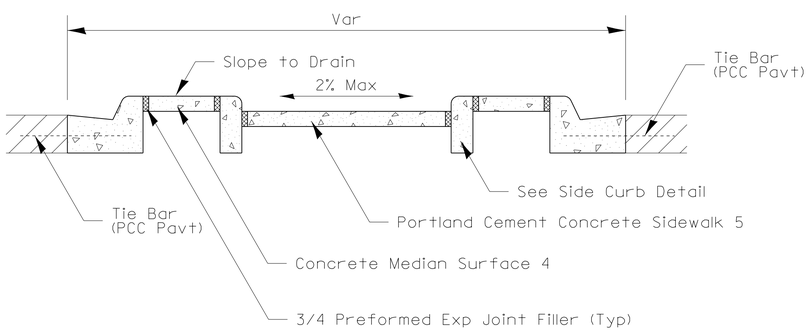

SECTION B-B

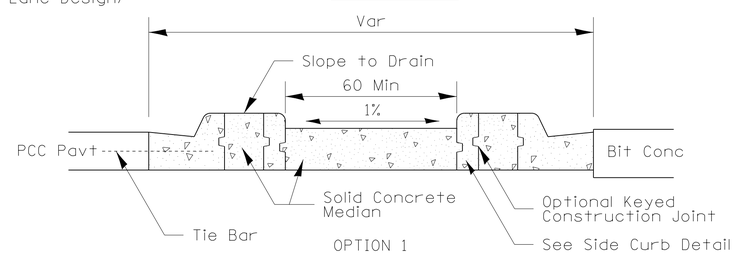

OPTION 1

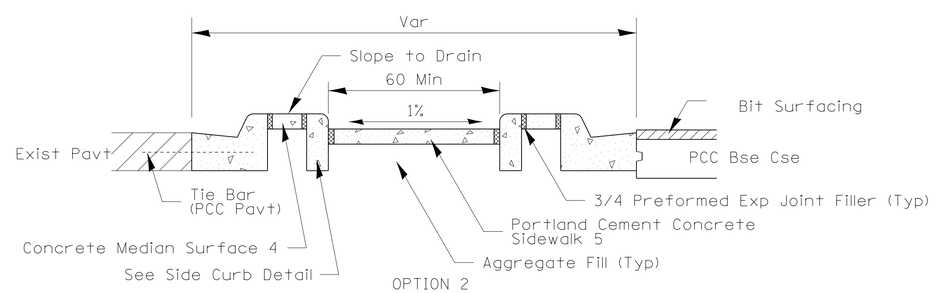

OPTION 2

General Notes:

See Standard 606301 and plan sheets for station & offsets, radii, dimensions, and details not shown.

See Standard 424031 for sidewalk details not shown.

The sidewalk should drain to the low side of the island. If necessary the sidewalk shall be sloped to drain at a maximum 2% grade.

See the plan general notes for the type of curb & gutter to be used on islands.

The sidewalk should not be closer than 36 from the corner of the island.

Keyed longitudinal construction joints shall be constructed without tie bars.

Medians and large islands shall consist of PCC Sidewalk 5, Concrete Median Surface 4, and Combination Concrete Curb & Gutter, Type M or B of the size specified. Median island can also be solid concrete medians.

Locations, layouts, and widths of the flush sidewalk area, shall be determined by the designer and shown on the plans.

The intermediate and small islands will be measured for payment from E.O.P. to E.O.P. using either option 1 or option 2, as specified in the plans, and will be paid for at the contract unit price per SQ FT for CONCRETE MEDIAN (SPECIAL) which shall include the combination curb & gutter, sidewalk, aggregate fill, concrete median surface, and solid concrete median.

Omit detectable warnings when distance between back of curbs is less than 6'.

ALL DIMENSIONS ARE IN INCHES UNLESS OTHERWISE NOTED.

FILE NAME = District 2 Standard	USER NAME = IDOT/District 2	DESIGNED -	REVISED - 6-27-14	STATE OF ILLINOIS DEPARTMENT OF TRANSPORTATION	REGION 2 / DISTRICT 2 STANDARD			F.A. RTE.	SECTION	COUNTY	TOTAL SHEETS	SHEET NO.
		DRAWN -	REVISED - 8-27-13									
	PLOT SCALE = 1.0000 ' / in.	CHECKED -	REVISED - 10-09-12							CONTRACT NO.		
	PLOT DATE = Thu Nov 13 11:28:46 2014	DATE -	REVISED -		SCALE:	SHEET NO. OF SHEETS	STA. TO STA.	FED. ROAD DIST. NO.	ILLINOIS	FED. AID PROJECT		

STANDARD OUTLET FOR CURB & GUTTER

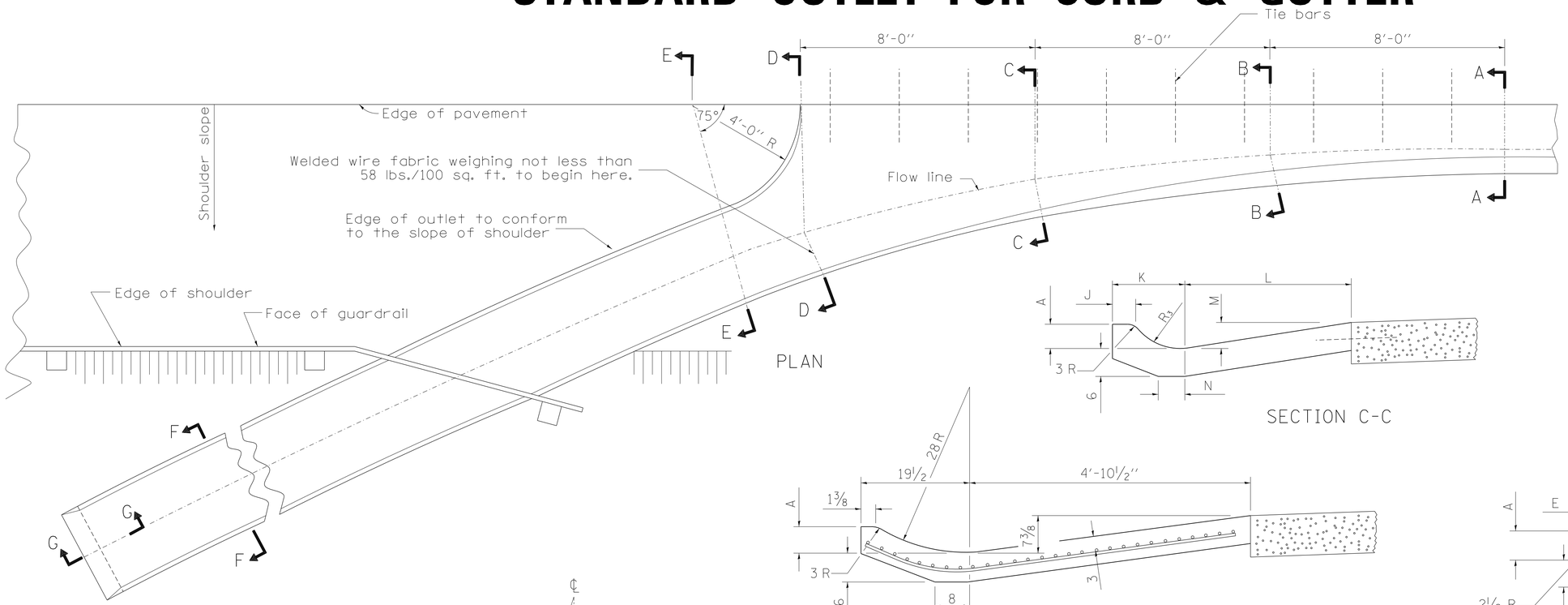

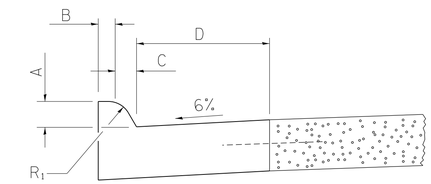

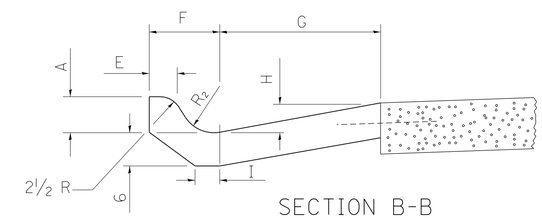

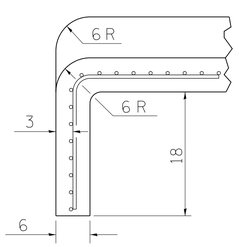

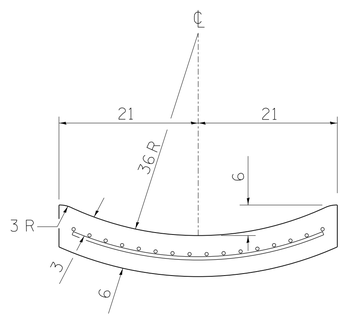

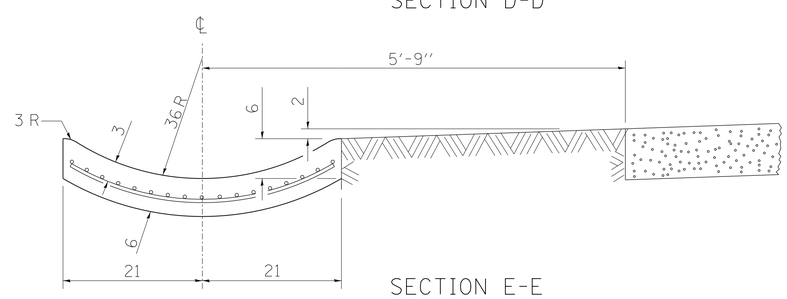

TYPE OF CURB & GUTTER	TABLE OF DIMENSIONS																	CONCRETE QUANTITY A-A TO E-E AND CURTAIN WALL FOR 9 PAV'T (CU YDS)	CONCRETE QUANTITY A-A TO E-E AND CURTAIN WALL FOR 10 PAV'T (CU YDS)
	A	SECTION A-A			SECTION B-B					SECTION C-C					R_1	R_2	R_3		
		B	C	D	E	F	G	H	I	J	K	L	M	N					
B-6.12	6	6	1	12	3	7⅞	13¾	2¾	4	3	12⅞	26½	5	6	1	2	8	1.87	1.89
B-6.18	6	6	1	18	3¾	9¼	22	3	5	3½	14¼	28¾	5⅛	5½	1	4	10	2.18	2.20
M-4.06	4	3	4	6	3	9½	10½	2	4	3	13	25	3	6	3	5	11	1.78	1.79
M-4.12	4	3	4	12	3⅛	9¾	13¾	2¾	6	3	13½	26½	5	6	3	5	9	1.89	1.91
M-4.18	4	3	4	18	3½	9¼	22	3	5	3½	14¼	28¾	5⅛	5½	3	4	10	2.11	2.13
M-4.24	4	3	4	24	5	11½	26	3⅜	4	3¾	15	38	5⅜	5	3	6	12	2.34	2.37
M-6.06	6	2	6	6	2¼	9¾	10½	2	4	2½	13	25	3	6	2	5	10	1.84	1.86
M-6.12	6	2	6	12	3½	8⅛	13¾	2¾	6	3	13½	26½	5	6	2	2	9	1.96	1.98
M-6.18	6	2	6	18	3½	9⅞	22	3	5	3½	14¼	28¾	5⅛	5½	2	4	10	2.18	2.20
M-6.24	6	2	6	24	5⅛	11	26	3⅜	4	3¾	17¾	38	5⅜	5	2	3¼	16	2.46	2.49

QUANTITY

For Section F-F =

0.069 cu. yds. concrete per ft.

NOTES

Class SI Concrete shall be used throughout.

Tie bars shall be No. 6 at 24 centers unless otherwise shown.

Gutter outlet shall be tied to the pavement in accordance with details for longitudinal construction joint shown on Standard 420001.

If the average grade of pavement for the distance from Section A-A to D-D exceeds 2%, this distance shall be increased 6' for each 1% increase in grade.

When curb and gutter is constructed adjacent to flexible pavement, a 1 expansion joint shall be installed at construction joints.

All dimensions are in inches unless otherwise shown.

FILE NAME = District 2 Standard	USER NAME = IDOT/District 2	DESIGNED -	REVISED - 11-12-14	STATE OF ILLINOIS DEPARTMENT OF TRANSPORTATION	REGION 2 / DISTRICT 2 STANDARD	F.A. RTE.	SECTION	COUNTY	TOTAL SHEETS	SHEET NO.
		DRAWN -	REVISED -							
	PLOT SCALE = 1.0000 ' / in.	CHECKED -	REVISED -					CONTRACT NO.		
	PLOT DATE = Thu Nov 13 11:28:47 2014	DATE -	REVISED -		SCALE: SHEET NO. OF SHEETS STA. TO STA.	FED. ROAD DIST. NO.	ILLINOIS	FED. AID PROJECT		

BOX CULVERT END SECTIONS

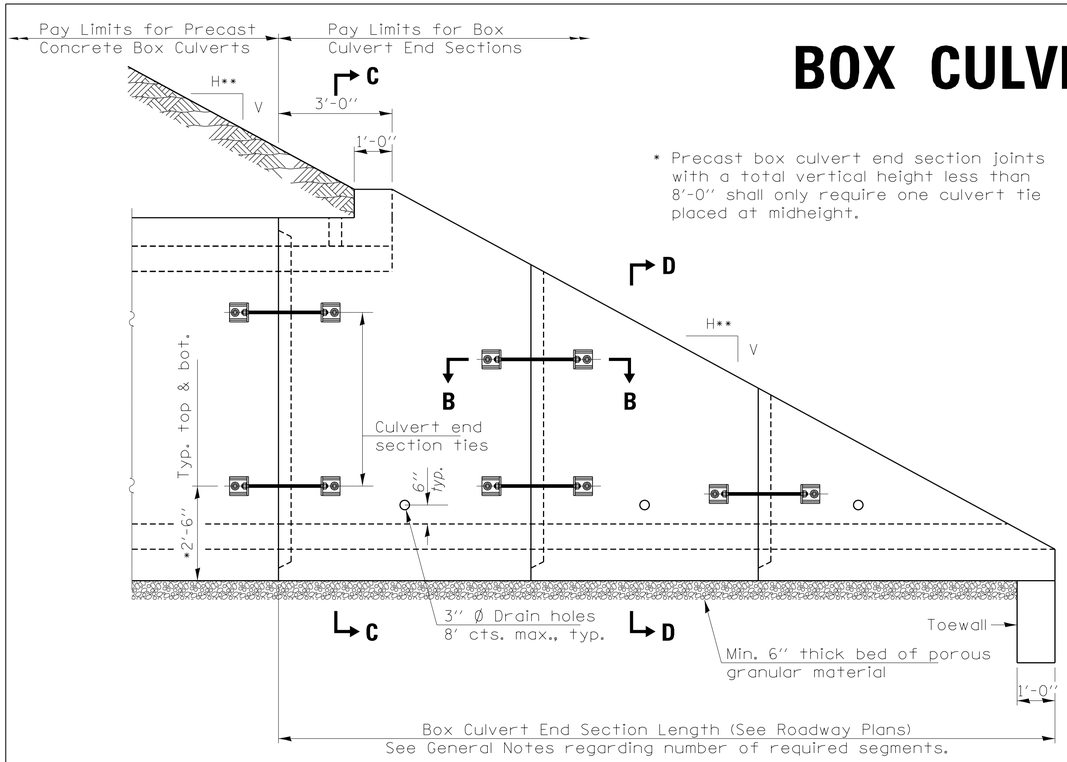

* Precast box culvert end section joints with a total vertical height less than 8'-0" shall only require one culvert tie placed at midheight.

ELEVATION

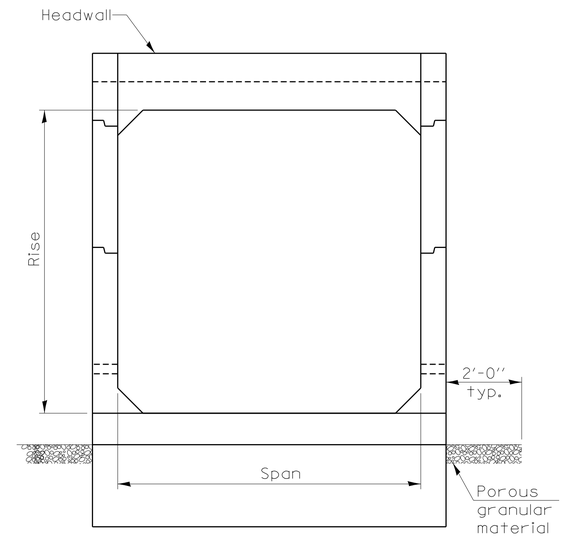

END VIEW

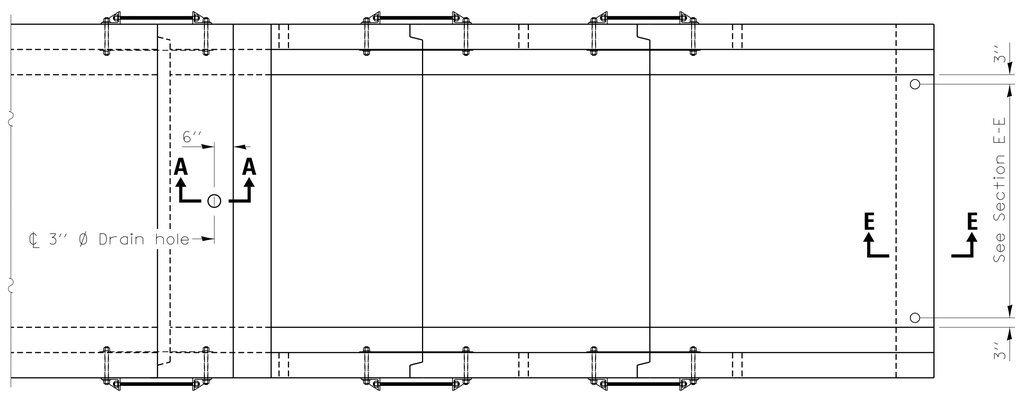

PLAN

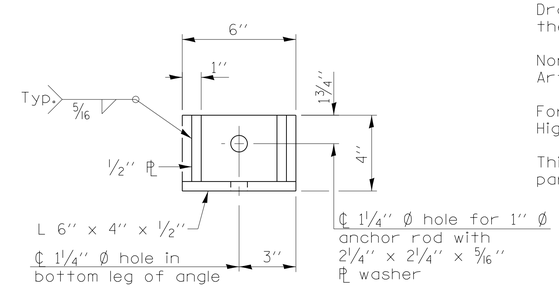

RESTRAINT ANGLE DETAIL

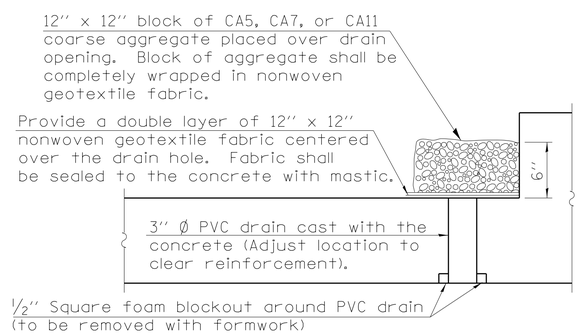

SECTION A–A

(All costs associated with furnishing and constructing the above drain details will not be measured for payment but shall be included in the contract unit price for the end section.)

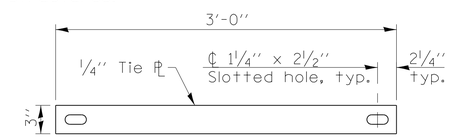

TIE PLATE DETAIL

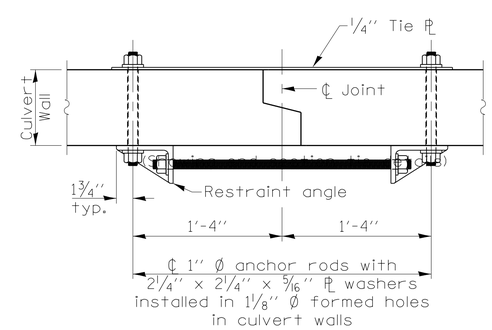

SECTION B–B

GENERAL NOTES

Box Culvert End Sections shall be constructed according to the requirements of Section 540 of the Standard Specifications except as modified herein. This work will be measured for payment as each, with each end of each culvert being one each. End sections will be paid for at the contract unit price per each for Box Culvert End Sections of the culvert number specified.

Typical box section dimensions, materials, and reinforcement details for Box Culvert End Sections shall be according to the requirements of ASTM C 1577 as required for the design of the portion of the culvert within the limits of Precast Concrete Box Culverts except as modified herein.

Number of segments shown in Side Elevation is for example only. Length and number of precast box sections required to construct Box Culvert End Sections shall be determined by the Contractor.

**See roadway plans for embankment slope (V:H). The Slope Must Match.

1" Ø anchor rods for the culvert ties shall conform to the requirements of ASTM F1554, Grade 105. Structural steel for tie plate and restraint angle shall conform to the requirements of Article 1006.04 of the Standard Specifications. All components of the culvert tie detail shall be galvanized according to the requirements of AASHTO M 111 or M 232 as applicable. 2 1/4" x 2 1/4" x 5/16" plate washers shall be provided under each nut required for the anchor rods. Anchor rods connecting precast sections shall be brought to a snug tight condition followed by an additional 1/2 turn on one of the nuts. Match marks shall be provided on the bolt and nut to verify relative rotation between the bolt and the nut. Holes in the walls for the culvert tie assembly may be drilled using core bits in lieu of using formed holes.

All costs associated with furnishing and installing or constructing the geotextile fabric, toewall, and culvert ties will not be measured for payment but shall be included in the contract unit price for Box Culvert End Sections of the culvert number specified.

Reinforcement bars designated (E) shall be epoxy coated.

Drain holes shall conform to the requirements of Article 503.11 of the Standard Specifications unless noted otherwise.

Nonwoven geotextile fabric shall conform to the requirements of Article 1080.01. The minimum weight of the fabric shall be 6 oz. / sq. yd..

For end sections with traversable pipe grate systems, see Highway Standard 542311 for required modifications.

This standard can be used for either cross drainage structures or parallel drainage structures.

FILE NAME = District 2 Standard	USER NAME = IDOT/District 2	DESIGNED -	REVISED - 5-09-14	STATE OF ILLINOIS DEPARTMENT OF TRANSPORTATION	REGION 2 / DISTRICT 2 STANDARD	F.A. RTE.	SECTION	COUNTY	TOTAL SHEETS / SHEET NO.
		DRAWN -	REVISED -						
	PLOT SCALE = 1.0000 ' / in.	CHECKED -	REVISED -					CONTRACT NO.	
	PLOT DATE = Thu Nov 13 11:28:47 2014	DATE -	REVISED -		SCALE: SHEET NO. OF SHEETS STA. TO STA.	FED. ROAD DIST. NO.	ILLINOIS	FED. AID PROJECT	

BOX CULVERT END SECTIONS

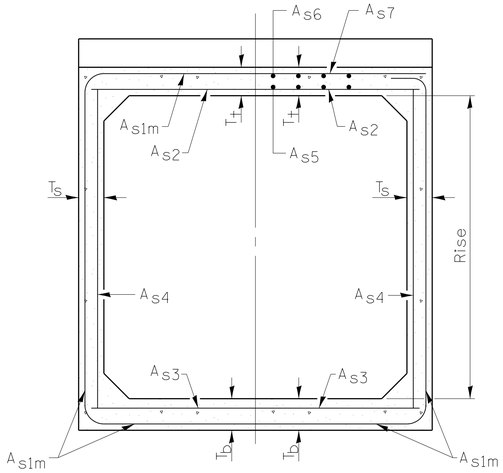

(Design Earth Cover < 2 ft.) (Design Earth Cover > 2 ft.)

SECTION C–C

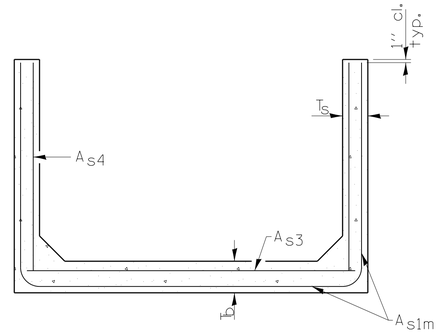

SECTION D–D

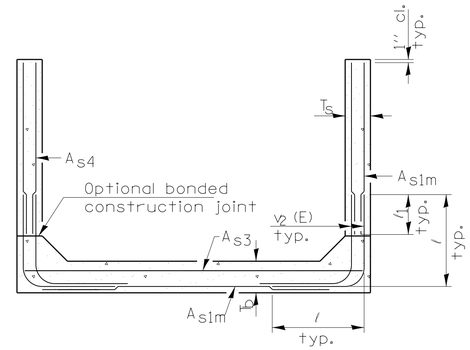

ALTERNATE SECTION D–D

Rise (ft.) / T(in.), Ts (in.)	Reinforcing Steel A_{s1m} (in.^{2}/ft.)										
	2	3	4	5	6	7	8	9	10	11	12
4	0.19	0.17									
5	0.26	0.21	0.18								
6		0.26	0.23	0.22							
7		0.33	0.59	0.27	0.28						
8			0.43	0.39	0.36	0.34	0.40				
9				0.43	0.40	0.37	0.36	0.48			
10				0.47	0.44	0.41	0.38	0.42	0.56		
11			0.54		0.46		0.41		0.50	0.65	
12			0.58		0.50		0.45		0.46		0.75

(A_{s1m} reinforcement based upon welded wire fabric conforming to AASHTO M 55 or M 221).

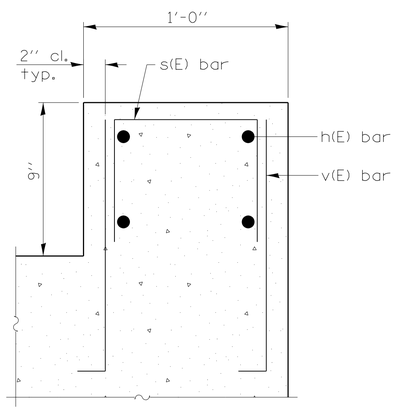

SECTION F–F

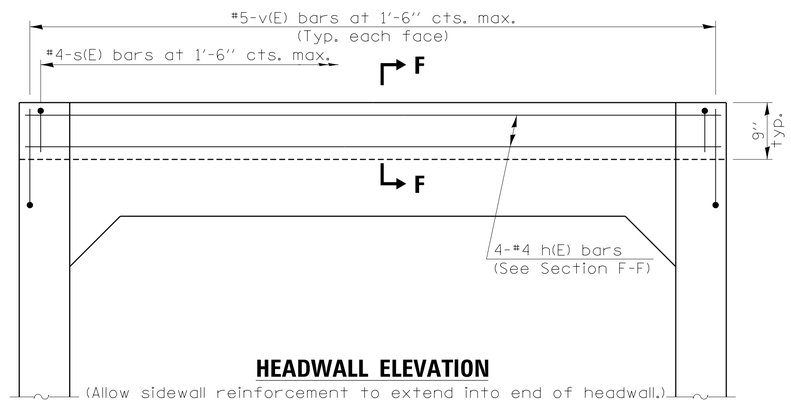

HEADWALL ELEVATION

(Allow sidewall reinforcement to extend into end of headwall.)

l_1 DIMENSION

#3 bar = 2'-0''
#4 bar = 2'-8''
#5 bar = 3'-4''
#6 bar = 3'-11''

Notes:
Alternate Section D-D is provided to allow the Contractor the option of casting the bottom slab of the end section first followed by construction of the sidewalls using conventional forming methods. Shop drawings that detail slab thickness and reinforcement layout shall be submitted to the Engineer for review and approval when using Alternate Section D-D.

The size and spacing of the v_2(E) bars shall provide a minimum reinforcement area along each face of the walls (in.^{2}/ft.) equal to 1.10*(A_{s1m}). v_2(E) bars may consist of #3 thru #6 size reinforcement bars and the longitudinal spacing shall not exceed the lesser of the wall thickness or 8 inches.

Bonded construction joints shall be prepared according to Article 503.09 of the Standard Specifications.

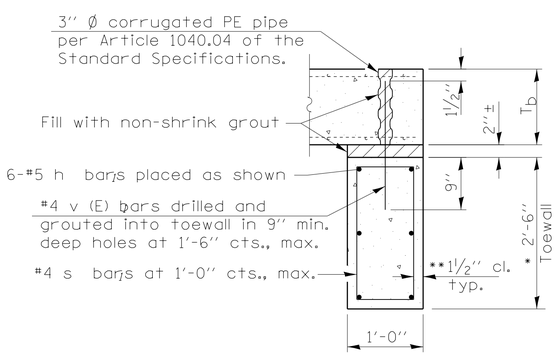

SECTION E–E

TOEWALL CONSTRUCTION SEQUENCE

1. Perform excavation and construct toewall.
2. Backfill according to the applicable paragraphs of Article 502.10 of the Standard Specifications and place bedding for precast box culvert end sections.
3. Set precast box culvert end section.
4. Drill and grout reinforcement in toewall using approved chemical adhesive in accordance with Section 1027 of the Standard Specifications.
5. Pressure grout voids using non-shrink grout conforming to Section 1024 of the Standard Specifications.

* The Contractor may furnish a precast or cast-in-place toewall. The Contractor shall be responsible for the strength and stability of the precast toewall during handling. Additional lifting points may be required depending upon the length of the toewall or the Contractor may need to modify the design of the toewall for the proposed handling the method.

** If soil conditions permit, the sides of the toewall may be poured directly against the soil. The clear cover on the sides of the toewall shall be increased to 3'' by increasing the thickness of the toewall.

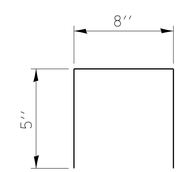

BAR s(E)

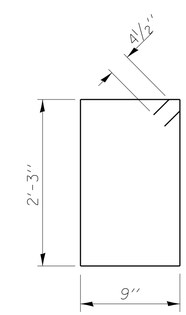

BAR s_1

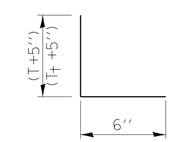

BAR v(E)

FILE NAME = District 2 Standard	USER NAME = IDOT/District 2	DESIGNED -	REVISED - 5-09-14	STATE OF ILLINOIS DEPARTMENT OF TRANSPORTATION	REGION 2 / DISTRICT 2 STANDARD	F.A. RTE.	SECTION	COUNTY	TOTAL SHEETS / SHEET NO.
		DRAWN -	REVISED -						
	PLOT SCALE = 1.0000 ' / in.	CHECKED -	REVISED -					CONTRACT NO.	
	PLOT DATE = Thu Nov 13 11:28:49 2014	DATE -	REVISED -		SCALE: SHEET NO. OF SHEETS STA. TO STA.	FED. ROAD DIST. NO.	ILLINOIS	FED. AID PROJECT	

CONCRETE END SECTIONS FOR PARALLEL PIPE CULVERTS 15" THRU 84" DIA.

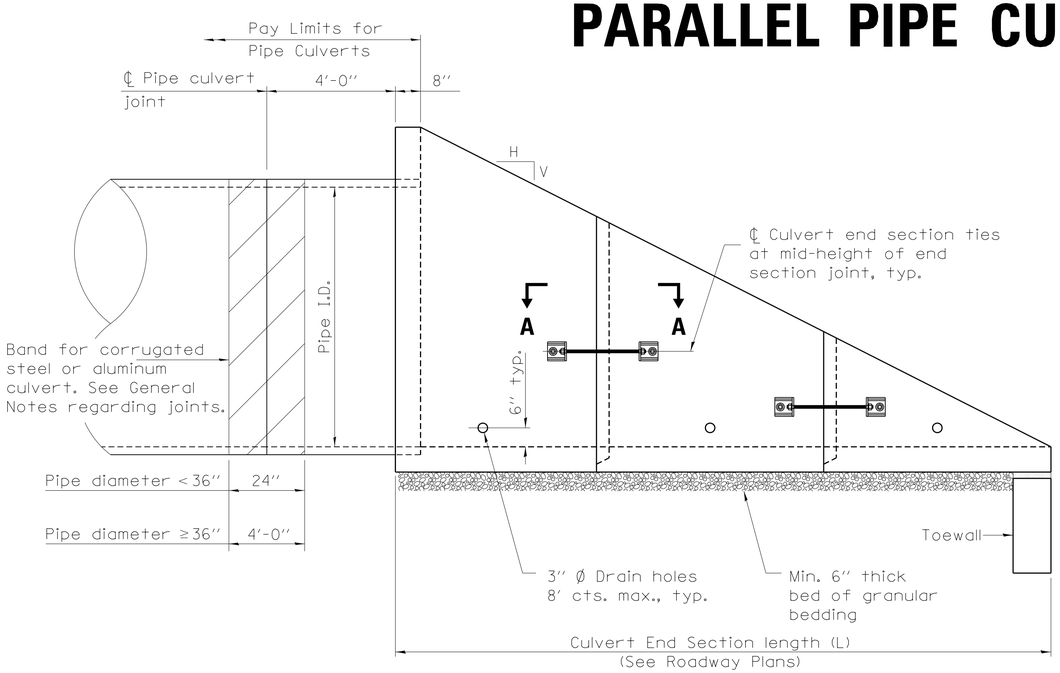

ELEVATION

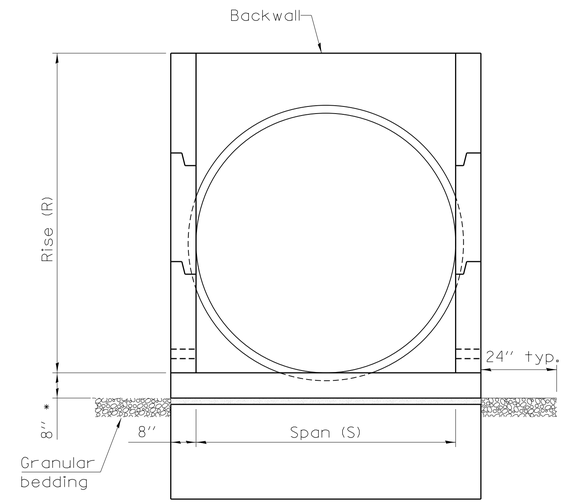

END VIEW

(Showing pipes)

* This dimension shall be increased by 1½" for CIP field construction. See General Notes.

GENERAL NOTES

The concrete end sections detailed herein for flexible type pipe culverts are restricted to use with parallel type drainage structures only and traversable pipe grating placed perpendicular to the sidewalls. When traversable pipe grating placed parallel to the sidewalls is required, use standard 542001 or 542011.

A segment of pipe culvert shall be cast into the backwall of the concrete end section such that a minimum of 4 ft of pipe culvert extends from the back face of the end section as shown in Elevation.

Segments of pipe culvert shall be joined in accordance with Article 542 of the Standard Specifications except bands for corrugated steel or aluminum culverts shall conform to the length requirements shown in elevation and have the same corrugations as the culvert pipe. These bands will be included in cost of the pipe.

The number of segments shown in elevation is for example only. The length and number of precast sections required to construct the end section shall be determined by the Contractor.

See roadway plans for slope (V:H) and pipe inside diameter.

2¼" x 2¼" x 5/16" plate washers shall be provided under each nut required for the anchor rods. Holes in the walls for the culvert tie assembly may be drilled using core bits in lieu of formed holes.

All slope ratios are expressed as units of verical dispacement to units of horizontal displacement (V:H).

All dimensions are in inches unless otherwise shown.

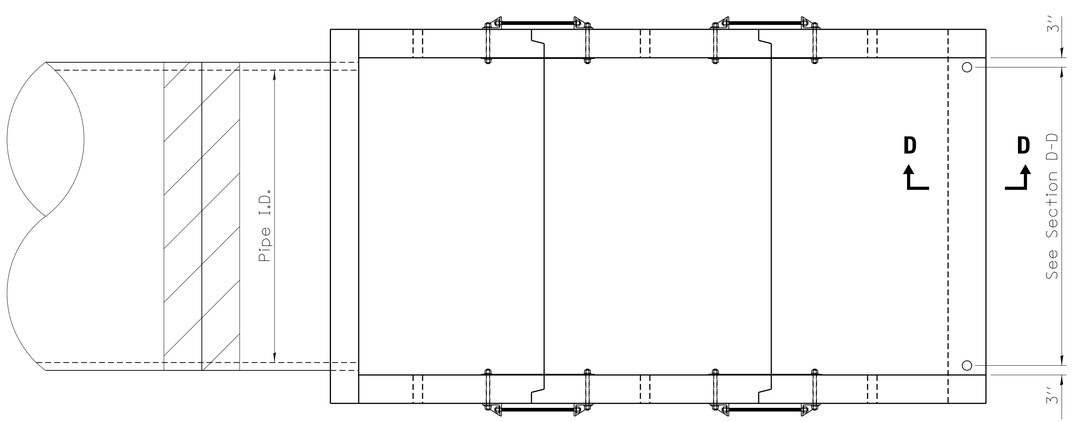

PLAN

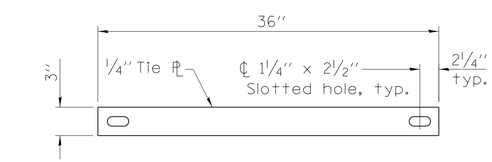

TIE PLATE DETAIL

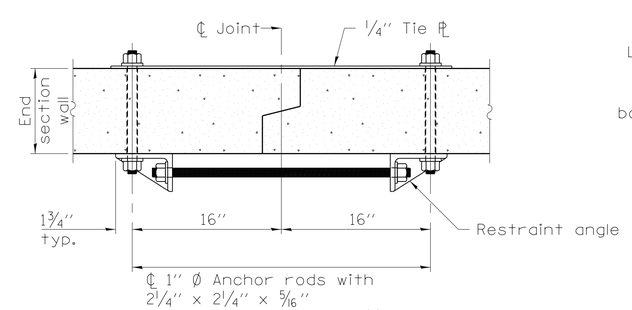

SECTION A–A

(Showing end section tie details)

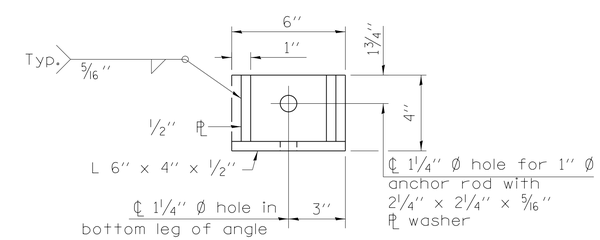

RESTRAINT ANGLE DETAIL

FILE NAME = District 2 Standard	USER NAME = IDOT/District 2	DESIGNED -	REVISED - 5-09-14	STATE OF ILLINOIS DEPARTMENT OF TRANSPORTATION	REGION 2 / DISTRICT 2 STANDARD	F.A. RTE.	SECTION	COUNTY	TOTAL SHEETS / SHEET NO.
		DRAWN -	REVISED -						
	PLOT SCALE = 1.0000 ' / in.	CHECKED -	REVISED -					CONTRACT NO.	
	PLOT DATE = Thu Nov 13 11:28:49 2014	DATE -	REVISED -		SCALE: SHEET NO. OF SHEETS STA. TO STA.	FED. ROAD DIST. NO.	ILLINOIS	FED. AID PROJECT	

CONCRETE END SECTIONS FOR PARALLEL PIPE CULVERTS 15" THRU 84" DIA.

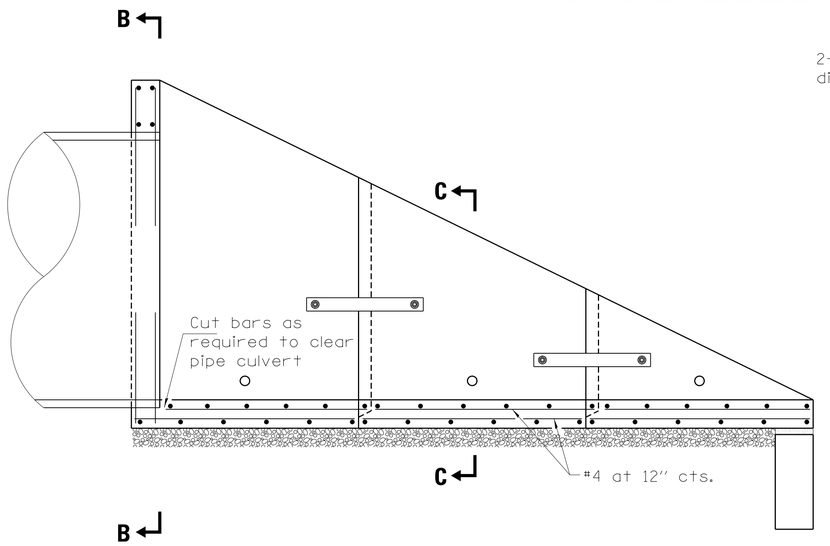

LONGITUDINAL SECTION

(Showing bottom slab and backwall reinforcement.)

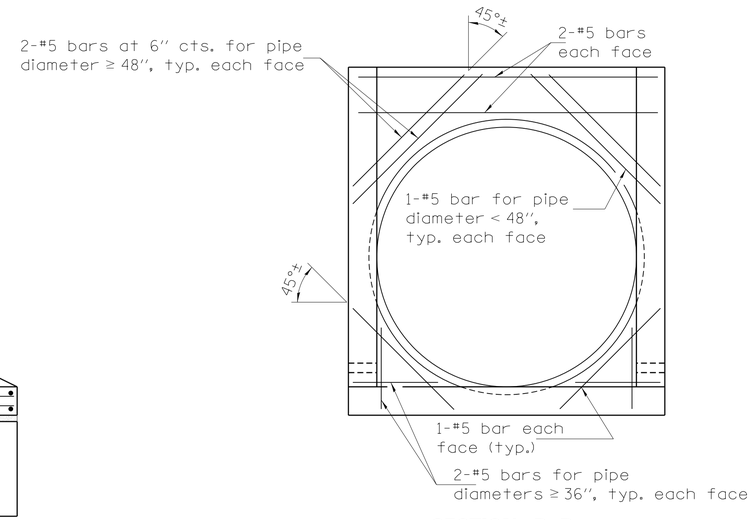

SECTION B–B

(Showing backwall reinforcement for pipes.)

LAP DIMENSION

#4 bar = 17"
#5 bar = 21"
#6 bar = 25"

* The Contractor may use lap splices for the sidewall reinforcement at the locations shown.

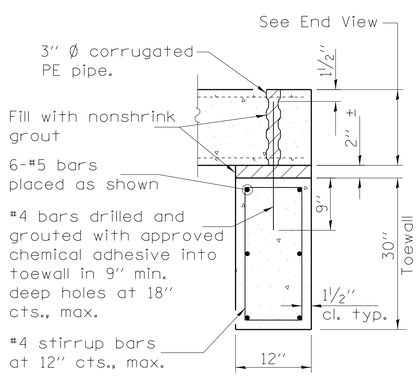

SECTION D–D

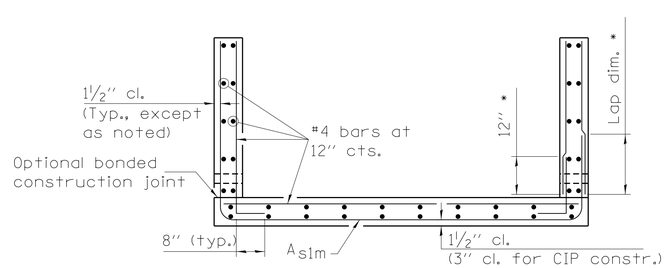

SECTION C–C

PARALLEL PIPE CULVERT END SECTION DIMENSIONS

Pipe I.D.	Tables IB, IC, IIIA, IIIB, AND IIIC				
	R	S	L Slope of End Section 1:4	1:6	1:10
15"	25"	16"	9'-0"	13'-2"	21'-6"
18"	28"	18"	10'-0"	14'-8"	24'-0"
21"	31"	22"	11'-0"	16'-2"	26'-6"
24"	35"	24"	12'-4"	18'-2"	29'-10"
30"	3'-5"	30"	14'-4"	21'-2"	34'-10"
36"	3'-11"	36"	16'-4"	24'-2"	39'-10"
42"	4'-5"	3'-6"	18'-4"	27'-2"	44'-10"
48"	5'-0"	4'-0"	20'-8"	30'-8"	50'-8"
54"	5'-4"	4'-6"	22'-0"	32'-8"	54'-0"
60"	5'-10"	5'-0"	24'-0"	35'-8"	59'-0"
66"	6'-4"	5'-6"	26'-0"	38'-8"	64'-0"
72"	6'-10"	6'-0"	28'-0"	41'-8"	69'-0"
78"	7'-4"	6'-6"	30'-0"	44'-8"	74'-0"
84"	7'-10"	7'-0"	32'-0"	47'-8"	79'-0"

REINFORCEMENT SCHEDULE

PIPES		
Pipe I.D.	Asim Bar Size	Asim Bar Spacing
15"	#4	12"
18"	#4	12"
21"	#4	12"
24"	#4	12"
30"	#4	12"
36"	#4	12"
42"	#4	12"
48"	#4	8"
54"	#4	8"
60"	#5	8"
66"	#5	8"
72"	#5	8"
78"	#5	8"
84"	#6	8"

The above "Tables" are referenced from Article 542.03 of the Standard Specifications.

FILE NAME = District 2 Standard	USER NAME = IDOT/District 2	DESIGNED -	REVISED - 5-09-14
		DRAWN -	REVISED -
	PLOT SCALE = 1.0000 ' / in.	CHECKED -	REVISED -
	PLOT DATE = Thu Nov 13 11:28:50 2014	DATE -	REVISED -

STATE OF ILLINOIS
DEPARTMENT OF TRANSPORTATION

REGION 2 / DISTRICT 2 STANDARD

SCALE: | SHEET NO. OF SHEETS | STA. TO STA.

F.A. RTE.	SECTION	COUNTY	TOTAL SHEETS	SHEET NO.
		CONTRACT NO.		
FED. ROAD DIST. NO.	ILLINOIS	FED. AID PROJECT		

CONCRETE END SECTIONS FOR PARALLEL PIPE CULVERTS 15" THRU 84" DIA.

QUANTITIES

Pipe I.D.	Tables IB, IC, IIIA, IIIB, and IIIC								
	Concrete yd^3			Reinforcement without Lap lbs.			Reinforcement with Lap lbs.		
	Slope of End Section			Slope of End Section			Slope of End Section		
	1:4	1:6	1:10	1:4	1:6	1:10	1:4	1:6	1:10
15"	1.4	1.9	2.8	250	330	510	270	350	540
18"	1.6	2.2	3.4	290	400	600	310	420	640
21"	2.0	2.7	4.2	330	450	690	360	480	740
24"	2.3	3.2	5.0	370	510	790	400	550	850
30"	3.1	4.3	6.7	490	680	1060	520	720	1130
36"	3.9	5.5	8.7	580	810	1270	620	870	1360
42"	4.9	6.9	10.9	720	1020	1610	770	1080	1710
48"	6.0	8.6	13.7	940	1320	2090	1010	1420	2240
54"	6.9	9.8	15.7	1090	1540	2440	1160	1650	2610
60"	8.1	11.6	18.6	1410	2000	3190	1530	2180	3480
66"	9.5	13.6	21.8	1650	2360	3780	1780	2560	4100
72"	10.9	15.7	25.2	1840	2630	4220	1990	2850	4580
78"	12.4	17.9	28.9	2110	3040	4900	2280	3280	5290
84"	14.1	20.3	32.8	2710	3910	6320	2970	4290	6950

The above quantities are estimates and provided for information only. Actual quantities may vary depending upon the final layout of reinforcement and number of segments determined by the Contractor.

For cast-in-place construction, increase concrete volumes by approximately 12%.

CONCRETE END SECTIONS FOR PARALLEL PIPE ARCH CULVERTS 15" THRU 84" DIA.

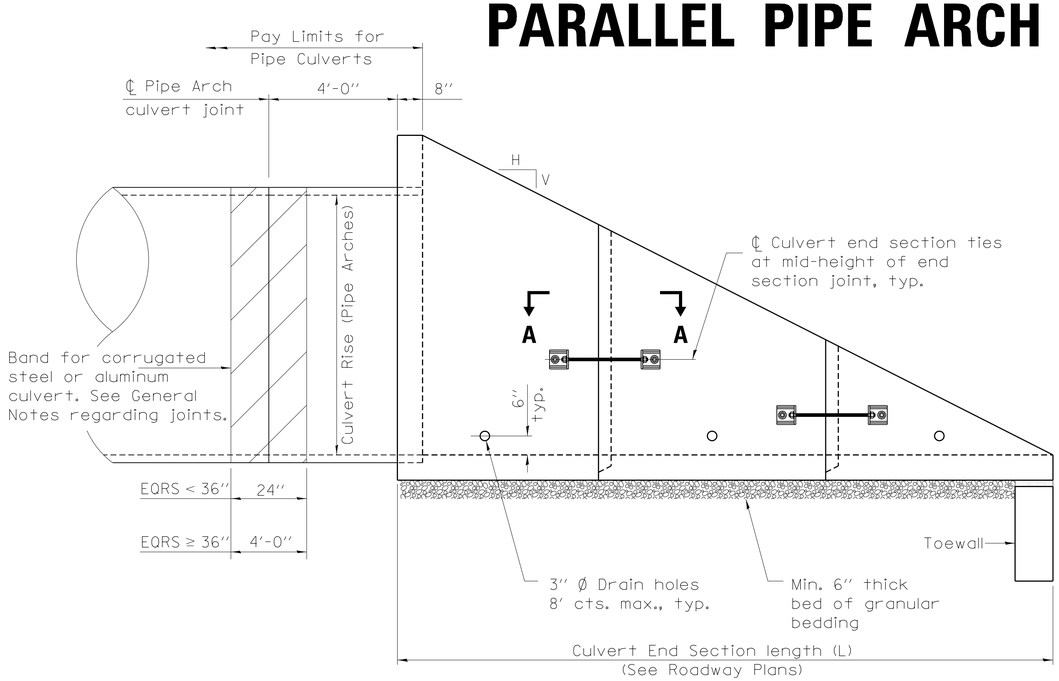

ELEVATION

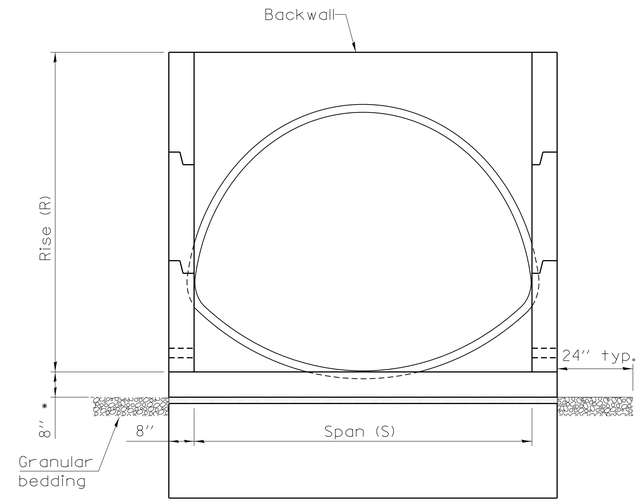

END VIEW

(Showing pipe arches)

* This dimension shall be increased by 1½" for CIP field construction. See General Notes.

GENERAL NOTES

The concrete end sections detailed herein for flexible type pipe culverts are restricted to use with parallel type drainage structures only and traversable pipe grating placed perpendicular to the sidewalls. When traversable pipe grating placed parallel to the sidewalls is required, use standard 542001 or 542011.

A segment of pipe culvert shall be cast into the backwall of the concrete end section such that a minimum of 4 ft of pipe culvert extends from the back face of the end section as shown in Elevation.

Segments of pipe culvert shall be joined in accordance with Article 542 of the Standard Specifications except bands for corrugated steel or aluminum culverts shall conform to the length requirements shown in elevation and have the same corrugations as the culvert pipe. These bands will be included in cost of the pipe.

The number of segments shown in elevation is for example only. The length and number of precast sections required to construct the end section shall be determined by the Contractor.

See roadway plans for slope (V:H) and pipe inside diameter.

2¼" x 2¼" x 5/16" plate washers shall be provided under each nut required for the anchor rods. Holes in the walls for the culvert tie assembly may be drilled using core bits in lieu of formed holes.

All slope ratios are expressed as units of verical dispacement to units of horizontal displacement (V:H).

All dimensions are in inches unless otherwise shown.

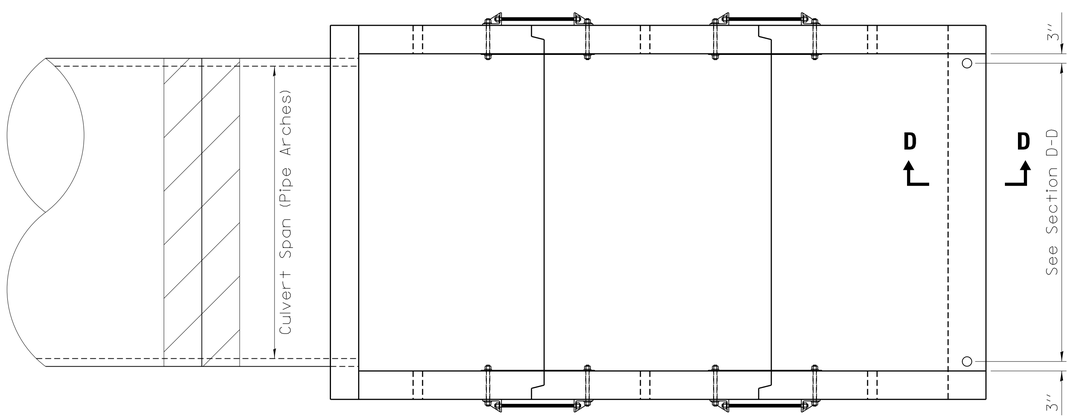

PLAN

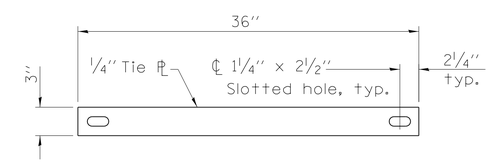

TIE PLATE DETAIL

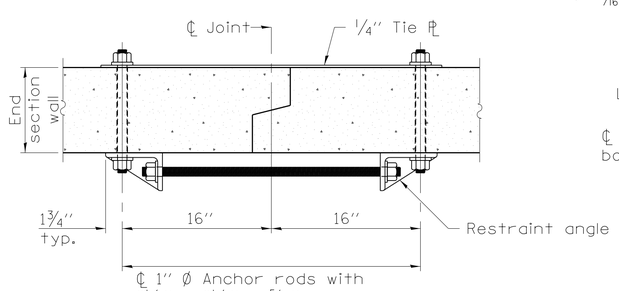

SECTION A–A

(Showing end section tie details)

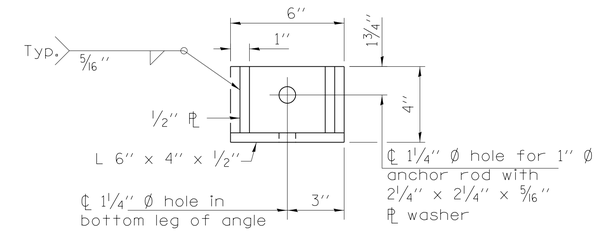

RESTRAINT ANGLE DETAIL

FILE NAME = District 2 Standard	USER NAME = IDOT/District 2	DESIGNED -	REVISED - 5-09-14	STATE OF ILLINOIS DEPARTMENT OF TRANSPORTATION	REGION 2 / DISTRICT 2 STANDARD		F.A. RTE.	SECTION	COUNTY / TOTAL SHEETS / SHEET NO.
		DRAWN -	REVISED -						
	PLOT SCALE = 1.0000 ' / in.	CHECKED -	REVISED -						CONTRACT NO.
	PLOT DATE = Thu Nov 13 11:28:52 2014	DATE -	REVISED -		SCALE:	SHEET NO. OF SHEETS	STA. TO STA.	FED. ROAD DIST. NO.	ILLINOIS FED. AID PROJECT

CONCRETE END SECTIONS FOR PARALLEL PIPE ARCH CULVERTS 15" THRU 84" DIA.

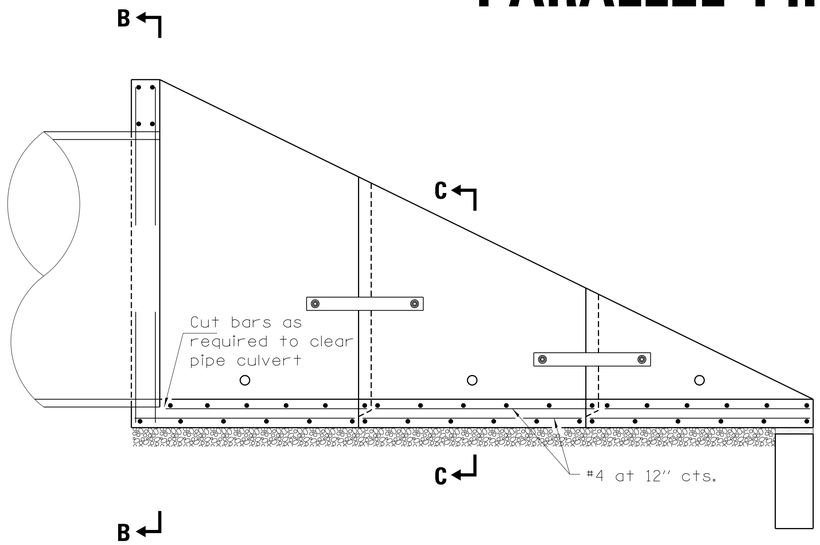

LONGITUDINAL SECTION

(Showing bottom slab and backwall reinforcement.)

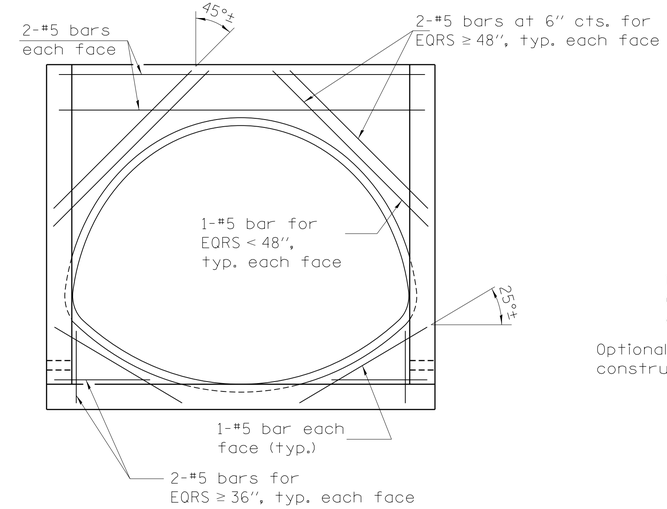

SECTION B–B

(Showing backwall reinforcement for arches.)

LAP DIMENSION

#4 bar = 17"
#5 bar = 21"
#6 bar = 25"

* The Contractor may use lap splices for the sidewall reinforcement at the locations shown.

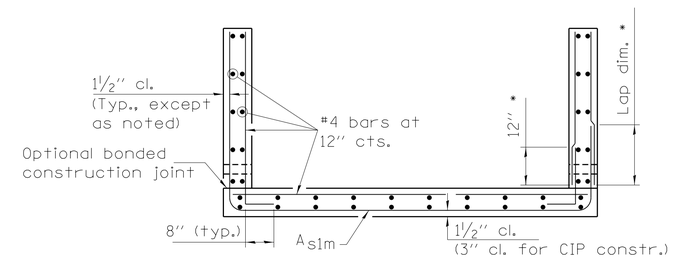

SECTION C–C

PARALLEL PIPE ARCH CULVERT END SECTION DIMENSIONS

Equivalent Round Size	Culvert Span	Culvert Rise	Table IIA, Corrugation : 2⅔" x ½" R	S	L Slope of End Section 1:4	1:6	1:10	Culvert Span	Culvert Rise	Table IIA, Corrugation : 3" x 1" R	S	L Slope of End Section 1:4	1:6	1:10
15"	17"	13"	23"	18"	8'-4"	12'-2"	19'-10"	-	-	-	-	-	-	-
18"	21"	15"	25"	22"	9'-0"	13'-2"	21'-6"	-	-	-	-	-	-	-
21"	24"	18"	28"	24"	10'-0"	14'-8"	24'-0"	-	-	-	-	-	-	-
24"	28"	20"	30"	28"	10'-8"	15'-8"	25'-8"	-	-	-	-	-	-	-
30"	35"	24"	34"	36"	12'-0"	17'-8"	29'-0"	-	-	-	-	-	-	-
36"	42"	29"	39"	3'-6"	13'-8"	20'-2"	33'-2"	40"	31"	3'-6"	40"	14'-8"	21'-8"	35'-8"
42"	49"	33"	3'-7"	4'-2"	15'-0"	22'-2"	36'-6"	46"	36"	3'-11"	3'-10"	16'-4"	24'-2"	39'-10"
48"	57"	38"	4'-0"	4'-10"	16'-8"	24'-8"	40'-8"	53"	41"	4'-5"	4'-6"	18'-4"	27'-2"	44'-10"
54"	64"	43"	4'-5"	5'-4"	18'-4"	27'-2"	44'-10"	60"	46"	4'-10"	5'-0"	20'-0"	29'-8"	49'-0"
60"	71"	47"	4'-9"	6'-0"	19'-8"	29'-2"	48'-2"	66"	51"	5'-3"	5'-6"	21'-8"	32'-2"	53'-2"
66"	77"	52"	5'-2"	6'-6"	21'-4"	31'-8"	52'-4"	73"	55"	5'-8"	6'-2"	23'-4"	34'-8"	57'-4"
72"	83"	57"	5'-7"	7'-0"	23'-0"	34'-2"	56'-6"	81"	59"	6'-0"	6'-10"	24'-8"	36'-8"	60'-8"
78"	-	-	-	-	-	-	-	87"	63"	6'-5"	7'-4"	26'-4"	39'-2"	64'-10"
84"	-	-	-	-	-	-	-	95"	67"	6'-9"	8'-0"	27'-8"	41'-2"	68'-2"

The above "Tables" are referenced from Article 542.03 of the Standard Specifications.

REINFORCEMENT SCHEDULE

PIPE ARCHES		
	A_{s1m}	
Equivalent Round Size	Bar Size	Bar Spacing
15"	#4	12"
18"	#4	12"
21"	#4	12"
24"	#4	12"
30"	#4	12"
36"	#4	12"
42"	#4	12"
48"	#4	12"
54"	#4	8"
60"	#4	8"
66"	#4	8"
72"	#5	8"
78"	#5	8"
84"	#5	8"

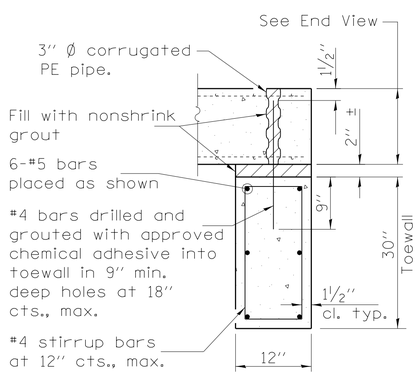

SECTION D–D

FILE NAME = District 2 Standard	USER NAME = IDOT/District 2	DESIGNED -	REVISED - 5-09-14	STATE OF ILLINOIS DEPARTMENT OF TRANSPORTATION	REGION 2 / DISTRICT 2 STANDARD	F.A. RTE. / SECTION / COUNTY / TOTAL SHEETS / SHEET NO.	
		DRAWN -	REVISED -				
	PLOT SCALE = 1.0000 ' / in.	CHECKED -	REVISED -		SCALE: / SHEET NO. OF SHEETS / STA. TO STA.	CONTRACT NO.	
	PLOT DATE = Thu Nov 13 11:28:53 2014	DATE -	REVISED -			FED. ROAD DIST. NO. / ILLINOIS / FED. AID PROJECT	

CONCRETE END SECTIONS FOR PARALLEL PIPE ARCH CULVERTS 15" THRU 84" DIA.

QUANTITIES

Equivalent Round Size	Table IIA, Corrugation: 2⅔" x ½"									Table IIA, Corrugation: 3" x 1"								
	Concrete yd^3			Reinforcement without Lap lbs.			Reinforcement with Lap lbs.			Concrete yd^3			Reinforcement without Lap lbs.			Reinforcement with Lap lbs.		
	Slope of End Section			Slope of End Section			Slope of End Section			Slope of End Section			Slope of End Section			Slope of End Section		
	1:4	1:6	1:10	1:4	1:6	1:10	1:4	1:6	1:10	1:4	1:6	1:10	1:4	1:6	1:10	1:4	1:6	1:10
15"	1.3	1.8	2.7	240	320	480	250	330	500	-	-	-	-	-	-	-	-	-
18"	1.5	2.1	3.2	270	360	540	290	370	570	-	-	-	-	-	-	-	-	-
21"	1.8	2.5	3.8	310	420	630	330	450	670	-	-	-	-	-	-	-	-	-
24"	2.1	2.8	4.4	360	480	730	380	510	780	-	-	-	-	-	-	-	-	-
30"	2.7	3.7	5.7	420	570	860	440	610	920	-	-	-	-	-	-	-	-	-
36"	3.4	4.6	7.2	520	700	1070	550	740	1140	3.6	5.0	7.8	560	770	1200	600	820	1270
42"	4.1	5.7	8.9	630	860	1340	660	910	1420	4.4	6.1	9.6	640	890	1380	680	940	1470
48"	5.0	7.0	11.0	740	1010	1560	780	1070	1650	5.5	7.7	12.2	800	1120	1750	840	1180	1860
54"	5.9	8.4	13.2	940	1320	2060	1000	1400	2190	6.4	9.1	14.4	980	1380	2170	1050	1470	2310
60"	6.9	9.7	15.4	1050	1470	2300	1110	1560	2440	7.4	10.6	16.8	1120	1580	2500	1190	1680	2670
66"	8.0	11.3	17.9	1190	1680	2630	1260	1780	2800	8.7	12.4	19.7	1320	1870	2960	1390	1980	3140
72"	9.1	12.9	20.6	1540	2190	3490	1660	2350	3770	9.9	14.1	22.4	1660	2360	3760	1790	2550	4060
78"	-	-	-	-	-	-	-	-	-	11.1	15.9	25.5	1880	2700	4320	2010	2900	4640
84"	-	-	-	-	-	-	-	-	-	12.4	17.8	28.5	2050	2940	4690	2200	3150	5040

The above quantities are estimates and provided for information only. Actual quantities may vary depending upon the final layout of reinforcement and number of segments determined by the Contractor.

For cast-in-place construction, increase concrete volumes by approximately 12%.

TRAVERSABLE PIPE GRATE FOR BOX CULVERT END SECTIONS

PIPE-GRATE SCHEDULE FOR BOX CULVERT END SECTIONS

Precast Box Culvert Dimensions			Slope of End Section								
			1:3			1:4			1:6		
S (ft)	R (ft)	T_1 (in)	Main Pipe No. / Length	Int. Support No. / Length	Total Length of Pipe	Main Pipe No. / Length	Int. Support No. / Length	Total Length of Pipe	Main Pipe No. / Length	Int. Support No. / Length	Total Length of Pipe
4	2	7.5	1 @ 8'-10"	N/A	8'-10"	1 @ 11'-7"	N/A	11'-7"	1 @ 17'-2"	N/A	17'-2"
4	2	5	1 @ 8'-2"	N/A	8'-2"	1 @ 10'-8"	N/A	10'-8"	1 @ 15'-11"	N/A	15'-11"
4	3	7.5	1 @ 12'-0"	N/A	12'-0"	1 @ 15'-8"	N/A	15'-8"	1 @ 23'-3"	1 @ 3'-7"	26'-10"
4	3	5	1 @ 11'-4"	N/A	11'-4"	1 @ 14'-10"	N/A	14'-10"	1 @ 22'-0"	1 @ 3'-7"	25'-7"
4	4	7.5	1 @ 15'-2"	N/A	15'-2"	1 @ 19'-10"	1 @ 3'-7"	23'-5"	1 @ 29'-4"	2 @ 3'-7"	36'-6"
4	4	5	1 @ 14'-6"	N/A	14'-6"	1 @ 18'-11"	N/A	18'-11"	1 @ 28'-1"	2 @ 3'-7"	35'-3"
5	2	8	1 @ 8'-11"	N/A	8'-11"	1 @ 11'-9"	N/A	11'-9"	1 @ 17'-5"	N/A	17'-5"
5	2	6	1 @ 8'-5"	N/A	8'-5"	1 @ 11'-1"	N/A	11'-1"	1 @ 16'-5"	N/A	16'-5"
5	3	8	1 @ 12'-1"	N/A	12'-1"	1 @ 15'-10"	N/A	15'-10"	1 @ 23'-6"	1 @ 4'-7"	28'-1"
5	3	6	1 @ 11'-7"	N/A	11'-7"	1 @ 15'-2"	N/A	15'-2"	1 @ 22'-6"	1 @ 4'-7"	27'-1"
5	4	8	1 @ 15'-3"	N/A	15'-3"	1 @ 20'-0"	1 @ 4'-7"	24'-7"	1 @ 29'-7"	2 @ 4'-7"	38'-9"
5	4	6	1 @ 14'-9"	N/A	14'-9"	1 @ 19'-3"	N/A	19'-3"	1 @ 28'-7"	2 @ 4'-7"	37'-9"
5	5	8	1 @ 18'-5"	N/A	18'-5"	1 @ 24'-1"	2 @ 4'-7"	33'-3"	1 @ 35'-8"	3 @ 4'-7"	49'-5"
5	5	6	1 @ 17'-11"	N/A	17'-11"	1 @ 23'-5"	1 @ 4'-7"	28'-0"	1 @ 34'-8"	2 @ 4'-7"	43'-10"
6	2	8	2 @ 8'-11"	N/A	17'-10"	2 @ 11'-9"	N/A	23'-6"	2 @ 17'-5"	N/A	34'-10"
6	2	7	2 @ 8'-8"	N/A	17'-4"	2 @ 11'-5"	N/A	22'-10"	2 @ 16'-11"	N/A	33'-10"
6	3	8	2 @ 12'-1"	N/A	24'-2"	2 @ 15'-10"	N/A	31'-8"	2 @ 23'-6"	1 @ 5'-7"	52'-7"
6	3	7	2 @ 11'-10"	N/A	23'-8"	2 @ 15'-6"	N/A	31'-0"	2 @ 23'-0"	1 @ 5'-7"	51'-7"
6	4	8	2 @ 15'-3"	N/A	30'-6"	2 @ 20'-0"	1 @ 5'-7"	45'-7"	2 @ 29'-7"	2 @ 5'-7"	70'-4"
6	4	7	2 @ 15'-0"	N/A	30'-0"	2 @ 19'-8"	1 @ 5'-7"	44'-11"	2 @ 29'-1"	2 @ 5'-7"	69'-4"
6	5	8	2 @ 18'-5"	N/A	36'-10"	2 @ 24'-1"	2 @ 5'-7"	59'-4"	2 @ 35'-8"	3 @ 5'-7"	88'-1"
6	5	7	2 @ 18'-2"	N/A	36'-4"	2 @ 23'-9"	2 @ 5'-7"	58'-8"	2 @ 35'-2"	2 @ 5'-7"	81'-6"
6	6	8	2 @ 21'-7"	1 @ 5'-7"	48'-9"	2 @ 28'-3"	2 @ 5'-7"	67'-8"	2 @ 41'-9"	3 @ 5'-7"	100'-3"
6	6	7	2 @ 21'-4"	1 @ 5'-7"	48'-3"	2 @ 27'-11"	2 @ 5'-7"	67'-0"	2 @ 41'-3"	3 @ 5'-7"	99'-3"
7	2	8	2 @ 8'-11"	N/A	17'-10"	2 @ 11'-9"	N/A	23'-6"	2 @ 17'-5"	N/A	34'-10"
7	3	8	2 @ 12'-1"	N/A	24'-2"	2 @ 15'-10"	N/A	31'-8"	2 @ 23'-6"	2 @ 6'-7"	60'-2"
7	4	8	2 @ 15'-3"	N/A	30'-6"	2 @ 20'-0"	2 @ 6'-7"	53'-2"	2 @ 29'-7"	3 @ 6'-7"	78'-11"
7	5	8	2 @ 18'-5"	N/A	36'-10"	2 @ 24'-1"	3 @ 6'-7"	67'-11"	2 @ 35'-8"	4 @ 6'-7"	97'-8"
7	6	8	2 @ 21'-7"	2 @ 6'-7"	56'-4"	2 @ 28'-3"	3 @ 6'-7"	76'-3"	2 @ 41'-9"	5 @ 6'-7"	116'-5"
7	7	8	2 @ 24'-9"	3 @ 6'-7"	69'-3"	2 @ 32'-4"	4 @ 6'-7"	91'-0"	2 @ 47'-10"	6 @ 6'-7"	135'-2"
8	2	8	3 @ 8'-11"	N/A	26'-9"	3 @ 11'-9"	N/A	35'-3"	3 @ 17'-5"	N/A	52'-3"
8	3	8	3 @ 12'-1"	N/A	36'-3"	3 @ 15'-10"	N/A	47'-6"	3 @ 23'-6"	2 @ 7'-7"	85'-8"
8	4	8	3 @ 15'-3"	N/A	45'-9"	3 @ 20'-0"	2 @ 7'-7"	75'-2"	3 @ 29'-7"	3 @ 7'-7"	111'-6"
8	5	8	3 @ 18'-5"	N/A	55'-3"	3 @ 24'-1"	3 @ 7'-7"	95'-0"	3 @ 35'-8"	4 @ 7'-7"	137'-4"
8	6	8	3 @ 21'-7"	2 @ 7'-7"	79'-11"	3 @ 28'-3"	3 @ 7'-7"	107'-6"	3 @ 41'-9"	5 @ 7'-7"	163'-2"
8	7	8	3 @ 24'-9"	3 @ 7'-7"	97'-0"	3 @ 32'-4"	4 @ 7'-7"	127'-4"	3 @ 47'-10"	6 @ 7'-7"	189'-0"
8	8	8	3 @ 27'-11"	3 @ 7'-7"	106'-6"	3 @ 36'-6"	4 @ 7'-7"	139'-10"	3 @ 53'-11"	6 @ 7'-7"	207'-3"
9	2	9	3 @ 9'-3"	N/A	27'-9"	3 @ 12'-1"	N/A	36'-3"	3 @ 17'-11"	N/A	53'-9"
9	3	9	3 @ 12'-4"	N/A	37'-0"	3 @ 16'-2"	N/A	48'-6"	3 @ 24'-0"	3 @ 8'-7"	97'-9"
9	4	9	3 @ 15'-6"	N/A	46'-6"	3 @ 20'-4"	2 @ 8'-7"	78'-2"	3 @ 30'-1"	3 @ 8'-7"	116'-0"
9	5	9	3 @ 18'-8"	N/A	56'-0"	3 @ 24'-5"	3 @ 8'-7"	99'-0"	3 @ 36'-2"	4 @ 8'-7"	142'-10"
9	6	9	3 @ 21'-10"	2 @ 8'-7"	82'-8"	3 @ 28'-7"	3 @ 8'-7"	111'-6"	3 @ 42'-3"	5 @ 8'-7"	169'-8"
9	7	9	3 @ 25'-0"	3 @ 8'-7"	100'-9"	3 @ 32'-8"	4 @ 8'-7"	132'-4"	3 @ 48'-4"	6 @ 8'-7"	196'-6"
9	8	9	3 @ 28'-2"	3 @ 8'-7"	110'-3"	3 @ 36'-10"	4 @ 8'-7"	144'-10"	3 @ 54'-5"	6 @ 8'-7"	214'-9"
9	9	9	3 @ 31'-4"	3 @ 8'-7"	119'-9"	3 @ 40'-11"	5 @ 8'-7"	165'-8"	3 @ 60'-6"	7 @ 8'-7"	241'-7"
10	2	10	3 @ 9'-6"	N/A	28'-6"	3 @ 12'-5"	N/A	37'-3"	3 @ 18'-5"	N/A	55'-3"
10	3	10	3 @ 12'-8"	N/A	38'-0"	3 @ 16'-6"	N/A	49'-6"	3 @ 24'-6"	3 @ 9'-7"	102'-3"
10	4	10	3 @ 15'-10"	N/A	47'-6"	3 @ 20'-8"	2 @ 9'-7"	81'-2"	3 @ 30'-7"	3 @ 9'-7"	120'-6"
10	5	10	3 @ 19'-0"	N/A	57'-0"	3 @ 24'-9"	3 @ 9'-7"	103'-0"	3 @ 36'-8"	4 @ 9'-7"	148'-4"
10	6	10	3 @ 22'-1"	2 @ 9'-7"	85'-5"	3 @ 28'-11"	3 @ 9'-7"	115'-6"	3 @ 42'-9"	5 @ 9'-7"	176'-2"
10	7	10	3 @ 25'-3"	3 @ 9'-7"	104'-6"	3 @ 33'-0"	4 @ 9'-7"	137'-4"	3 @ 48'-10"	6 @ 9'-7"	204'-0"
10	8	10	3 @ 28'-5"	3 @ 9'-7"	114'-0"	3 @ 37'-2"	4 @ 9'-7"	149'-10"	3 @ 54'-11"	6 @ 9'-7"	222'-3"
10	9	10	3 @ 31'-7"	4 @ 9'-7"	133'-1"	3 @ 41'-3"	5 @ 9'-7"	171'-8"	3 @ 61'-0"	7 @ 9'-7"	250'-1"
10	10	10	3 @ 34'-9"	4 @ 9'-7"	142'-7"	3 @ 45'-5"	5 @ 9'-7"	184'-2"	3 @ 67'-1"	8 @ 9'-7"	277'-11"
11	2	11	4 @ 9'-9"	N/A	39'-0"	4 @ 12'-9"	N/A	51'-0"	4 @ 18'-11"	N/A	75'-8"
11	3	11	4 @ 12'-11"	N/A	51'-8"	4 @ 16'-11"	N/A	67'-8"	4 @ 25'-0"	3 @ 10'-7"	131'-9"
11	4	11	4 @ 16'-1"	N/A	64'-4"	4 @ 21'-0"	2 @ 10'-7"	105'-2"	4 @ 31'-1"	3 @ 10'-7"	156'-1"
11	6	11	4 @ 22'-5"	2 @ 10'-7"	110'-10"	4 @ 29'-3"	3 @ 10'-7"	148'-9"	4 @ 43'-3"	5 @ 10'-7"	225'-11"
11	8	11	4 @ 28'-9"	3 @ 10'-7"	146'-9"	4 @ 37'-6"	4 @ 10'-7"	192'-4"	4 @ 55'-5"	6 @ 10'-7"	285'-2"
11	10	11	4 @ 35'-0"	4 @ 10'-7"	182'-4"	4 @ 45'-9"	5 @ 10'-7"	235'-11"	4 @ 67'-7"	8 @ 10'-7"	355'-0"
11	11	11	4 @ 38'-2"	4 @ 10'-7"	195'-0"	4 @ 49'-10"	6 @ 10'-7"	262'-10"	4 @ 73'-8"	9 @ 10'-7"	389'-11"
12	2	12	4 @ 10'-0"	N/A	40'-0"	4 @ 13'-1"	N/A	52'-4"	4 @ 19'-5"	N/A	77'-8"
12	3	12	4 @ 13'-2"	N/A	52'-8"	4 @ 17'-3"	N/A	69'-0"	4 @ 25'-6"	3 @ 11'-7"	136'-9"
12	4	12	4 @ 16'-4"	N/A	65'-4"	4 @ 21'-4"	2 @ 11'-7"	108'-6"	4 @ 31'-7"	4 @ 11'-7"	172'-8"
12	6	12	4 @ 22'-8"	2 @ 11'-7"	113'-10"	4 @ 29'-7"	3 @ 11'-7"	153'-1"	4 @ 43'-9"	5 @ 11'-7"	232'-11"
12	8	12	4 @ 29'-0"	3 @ 11'-7"	150'-9"	4 @ 37'-10"	4 @ 11'-7"	197'-8"	4 @ 55'-11"	7 @ 11'-7"	304'-9"
12	10	12	4 @ 35'-4"	4 @ 11'-7"	187'-8"	4 @ 46'-1"	5 @ 11'-7"	242'-3"	4 @ 68'-1"	8 @ 11'-7"	365'-0"
12	12	12	4 @ 41'-8"	5 @ 11'-7"	224'-7"	4 @ 54'-4"	6 @ 11'-7"	286'-10"	4 @ 80'-3"	10 @ 11'-7"	436'-10"

GENERAL NOTES

For layout of traversable pipe grate system, see Highway Standard 542311.

This table is only to be used for cross drainage structures.

FILE NAME = District 2 Standard	USER NAME = IDOT/District 2	DESIGNED -	REVISED - 5-09-14	STATE OF ILLINOIS DEPARTMENT OF TRANSPORTATION	REGION 2 / DISTRICT 2 STANDARD	F.A. RTE.	SECTION	COUNTY	TOTAL SHEETS / SHEET NO.
		DRAWN -	REVISED -					CONTRACT NO.	
	PLOT SCALE = 1.0000 ' / in.	CHECKED -	REVISED -						
	PLOT DATE = Thu Nov 13 11:28:54 2014	DATE -	REVISED -		SCALE: SHEET NO. OF SHEETS STA. TO STA.	FED. ROAD DIST. NO.	ILLINOIS	FED. AID PROJECT	

TRAVERSABLE PIPE GRATE FOR PARALLEL DRAINAGE STRUCTURE

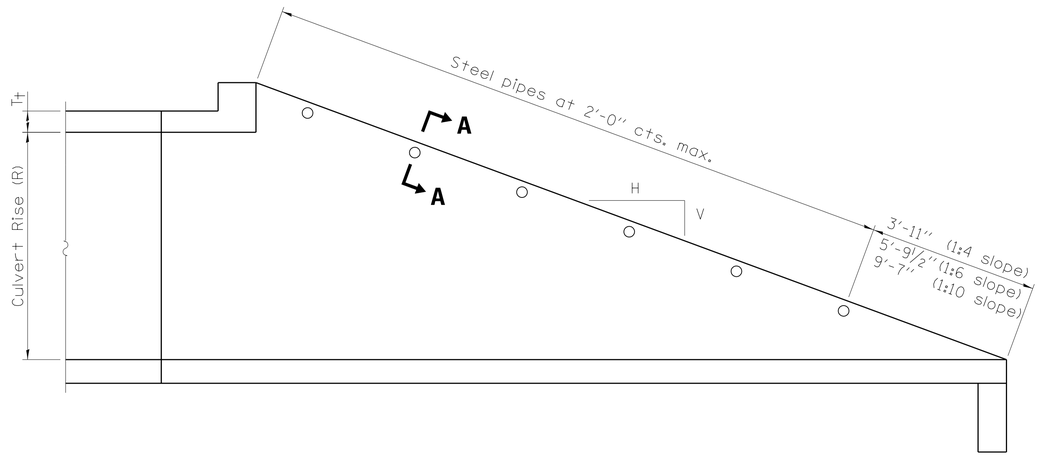

LONGITUDINAL SECTION

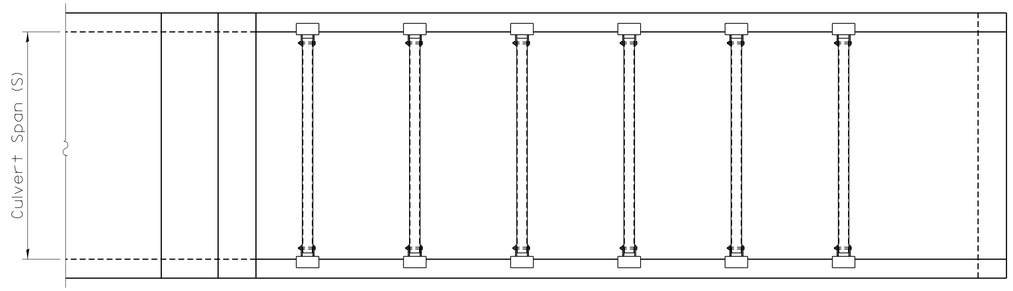

PLAN VIEW

GENERAL NOTES

The minimum edge distance from the center of a hole to the free edge of a structural shape or plate shall be 1½" unless noted otherwise.

This standard shall only be used on concrete end sections for parallel drainage structures.

The Contractor may install the thru bolts using drilling and grouting in lieu of providing a formed hole using steel pipe. Installation shall be in accordance with Article 509.06 using a method that results in the annulus surrounding the bolt being completely filled with adhesive. The method of drilling shall not result in spalled concrete at the exit face. Epoxy grouted thru bolts shall be snug tightened followed by an additional 1/3 turn on the interior nut at final installation. Cost included with Traversable Pipe Grate.

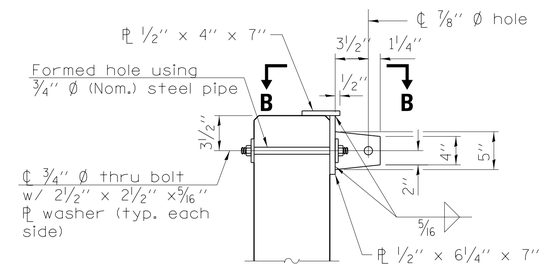

SECTION A–A

(4" Ø pipe not shown for clarity.)

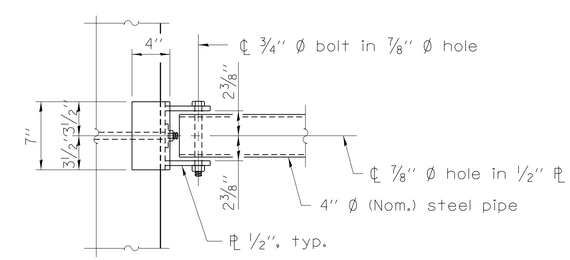

VIEW B–B

FILE NAME = District 2 Standard	USER NAME = IDOT/District 2	DESIGNED -	REVISED - 5-09-14	STATE OF ILLINOIS DEPARTMENT OF TRANSPORTATION	REGION 2 / DISTRICT 2 STANDARD	F.A. RTE.	SECTION	COUNTY	TOTAL SHEETS	SHEET NO.
		DRAWN -	REVISED -							
	PLOT SCALE = 1.0000 '/ in.	CHECKED -	REVISED -					CONTRACT NO.		
	PLOT DATE = Thu Nov 13 11:28:55 2014	DATE -	REVISED -		SCALE: SHEET NO. OF SHEETS STA. TO STA.	FED. ROAD DIST. NO.	ILLINOIS	FED. AID PROJECT		

TRAVERSABLE PIPE GRATE FOR PARALLEL DRAINAGE STRUCTURE

PIPE GRATE SCHEDULE FOR PARALLEL BOX CULVERTS

(<2 FT COVER)

BOX SIZE		SLOPE OF END SECTION					
		1:4		1:6		1:10	
SPAN (FT.)	RISE (FT.)	Pipes No. / Length	Total Length of Pipe	Pipes No. / Length	Total Length of Pipe	Pipes No. / Length	Total Length of Pipe
3	2	5 @ 2'-7"	12'-11"	8 @ 2'-7"	20'-8"	12 @ 2'-7"	31'-0"
3	3	7 @ 2'-7"	18'-1"	11 @ 2'-7"	28'-5"	17 @ 2'-7"	43'-11"
4	2	5 @ 3'-7"	17'-11"	8 @ 3'-7"	28'-8"	13 @ 3'-7"	46'-7"
4	3	8 @ 3'-7"	28'-8"	11 @ 3'-7"	39'-5"	18 @ 3'-7"	64'-6"
4	4	10 @ 3'-7"	35'-10"	14 @ 3'-7"	50'-2"	23 @ 3'-7"	82'-5"
5	2	6 @ 4'-7"	27'-6"	8 @ 4'-7"	36'-8"	13 @ 4'-7"	59'-7"
5	3	8 @ 4'-7"	36'-8"	11 @ 4'-7"	50'-5"	18 @ 4'-7"	82'-6"
5	4	10 @ 4'-7"	45'-10"	14 @ 4'-7"	64'-2"	23 @ 4'-7"	105'-5"
5	5	12 @ 4'-7"	55'-0"	17 @ 4'-7"	77'-11"	28 @ 4'-7"	128'-4"
6	2	6 @ 5'-7"	33'-6"	8 @ 5'-7"	44'-8"	13 @ 5'-7"	72'-7"
6	3	8 @ 5'-7"	44'-8"	11 @ 5'-7"	61'-5"	18 @ 5'-7"	100'-6"
6	4	10 @ 5'-7"	55'-10"	14 @ 5'-7"	78'-2"	23 @ 5'-7"	128'-5"
6	5	12 @ 5'-7"	67'-0"	17 @ 5'-7"	94'-11"	28 @ 5'-7"	156'-4"
6	6	14 @ 5'-7"	78'-2"	20 @ 5'-7"	111'-8"	33 @ 5'-7"	184'-3"
7	2	6 @ 6'-7"	39'-6"	8 @ 6'-7"	52'-8"	13 @ 6'-7"	85'-7"
7	3	8 @ 6'-7"	52'-8"	11 @ 6'-7"	72'-5"	18 @ 6'-7"	118'-6"
7	4	10 @ 6'-7"	65'-10"	14 @ 6'-7"	92'-2"	23 @ 6'-7"	151'-5"
7	5	12 @ 6'-7"	79'-0"	17 @ 6'-7"	111'-11"	28 @ 6'-7"	184'-4"
7	6	14 @ 6'-7"	92'-2"	20 @ 6'-7"	131'-8"	33 @ 6'-7"	217'-3"
7	7	16 @ 6'-7"	105'-4"	23 @ 6'-7"	151'-5'	38 @ 6'-7"	250'-2"
8	2	6 @ 7'-7"	45'-6"	8 @ 7'-7"	60'-8"	13 @ 7'-7"	98'-7"
8	3	8 @ 7'-7"	60'-8"	11 @ 7'-7"	83'-5"	18 @ 7'-7"	136'-6"
8	4	10 @ 7'-7"	75'-10"	14 @ 7'-7"	106'-2"	23 @ 7'-7"	174'-5"
8	5	12 @ 7'-7"	91'-0"	17 @ 7'-7"	128'-11"	28 @ 7'-7"	212'-4"
8	6	14 @ 7'-7"	106'-2"	20 @ 7'-7"	151'-8"	33 @ 7'-7"	250'-3"
8	7	16 @ 7'-7"	121'-4"	23 @ 7'-7"	174'-5"	38 @ 7'-7"	288'-2"
8	8	18 @ 7'-7"	136'-6"	26 @ 7'-7"	197'-2"	43 @ 7'-7"	326'-1"
9	2	6 @ 8'-7"	51'-6"	8 @ 8'-7"	68'-8"	13 @ 8'-7"	111'-7"
9	3	8 @ 8'-7"	68'-8"	11 @ 8'-7"	94'-5"	18 @ 8'-7"	154'-6'
9	4	10 @ 8'-7"	85'-10"	14 @ 8'-7"	120'-2"	23 @ 8'-7"	197'-5"
9	5	12 @ 8'-7"	103'-0"	17 @ 8'-7"	145'-11"	28 @ 8'-7"	240'-4"
9	6	14 @ 8'-7"	120'-2"	20 @ 8'-7"	171'-8"	33 @ 8'-7"	283'-3"
9	7	16 @ 8'-7"	137'-4"	23 @ 8'-7"	197'-5"	38 @ 8'-7"	326'-2"
9	8	18 @ 8'-7"	154'-6"	26 @ 8'-7"	223'-2"	43 @ 8'-7"	369'-1"
9	9	20 @ 8'-7"	171'-8"	30 @ 8'-7"	257'-6"	48 @ 8'-7"	412'-0"
10	2	6 @ 9'-7"	57'-6"	9 @ 9'-7"	86'-3"	14 @ 9'-7"	134'-2"
10	3	8 @ 9'-7"	76'-8"	12 @ 9'-7"	115'-0"	19 @ 9'-7"	182'-1"
10	4	10 @ 9'-7"	95'-10"	15 @ 9'-7"	143'-9"	24 @ 9'-7"	230'-0"
10	5	12 @ 9'-7"	115'-0"	18 @ 9'-7"	172'-6"	29 @ 9'-7"	277'-11"
10	6	14 @ 9'-7"	134'-2"	21 @ 9'-7"	201'-3"	34 @ 9'-7"	325'-10"
10	7	16 @ 9'-7"	153'-4"	24 @ 9'-7"	230'-0"	39 @ 9'-7"	373'-9"
10	8	18 @ 9'-7"	172'-6"	27 @ 9'-7"	258'-9"	44 @ 9'-7"	421'-8"
10	9	20 @ 9'-7"	191'-8"	30 @ 9'-7"	287'-5"	49 @ 9'-7"	469'-7"
10	10	22 @ 9'-7"	210'-10"	33 @ 9'-7"	316'-3"	54 @ 9'-7"	517'-6"

PIPE GRATE SCHEDULE FOR PARALLEL BOX CULVERTS

(<2 FT COVER)

BOX SIZE		SLOPE OF END SECTION					
		1:4		1:6		1:10	
SPAN (FT.)	RISE (FT.)	Pipes No. / Length	Total Length of Pipe	Pipes No. / Length	Total Length of Pipe	Pipes No. / Length	Total Length of Pipe
11	2	6 @ 10'-7"	63'-6"	9 @ 10'-7"	95'-3"	14 @ 10'-7"	148'-2"
11	3	8 @ 10'-7"	84'-8"	12 @ 10'-7"	127'-0"	19 @ 10'-7"	201'-1"
11	4	10 @ 10'-7"	105'-10"	15 @ 10'-7"	158'-9"	24 @ 10'-7"	254'-0"
11	6	14 @ 10'-7"	148'-2"	21 @ 10'-7"	222'-3"	34 @ 10'-7"	359'-10"
11	8	18 @ 10'-7"	190'-6"	27 @ 10'-7"	285'-9"	44 @ 10'-7"	465'-8"
11	10	23 @ 10'-7"	243'-5"	33 @ 10'-7"	349'-3"	54 @ 10'-7"	571'-6"
11	11	25 @ 10'-7"	264'-7"	36 @ 10'-7"	381'-0"	59 @ 10'-7"	624'-5"
12	2	6 @ 11'-7"	69'-6"	9 @ 11'-7"	104'-3"	15 @ 11'-7"	173'-9"
12	3	8 @ 11'-7"	92'-8"	12 @ 11'-7"	139'-0"	20 @ 11'-7"	231'-8"
12	4	10 @ 11'-7"	115'-10"	15 @ 11'-7"	173'-9"	25 @ 11'-7"	289'-7"
12	6	15 @ 11'-7"	173'-9"	21 @ 11'-7"	243'-3"	35 @ 11'-7"	405'-5"
12	8	19 @ 11'-7"	220'-1"	27 @ 11'-7"	312'-9"	45 @ 11'-7"	521'-3"
12	10	23 @ 11'-7"	266'-5"	33 @ 11'-7"	382'-3"	55 @ 11'-7"	637'-1"
12	12	27 @ 11'-7"	312'-9"	39 @ 11'-7"	451'-9"	65 @ 11'-7"	752'-11"

PIPE GRATE SCHEDULE FOR PARALLEL BOX CULVERTS

(>2 FT COVER)

BOX SIZE		SLOPE OF END SECTION					
		1:4		1:6		1:10	
SPAN (FT.)	RISE (FT.)	Pipes No. / Length	Total Length of Pipe	Pipes No. / Length	Total Length of Pipe	Pipes No. / Length	Total Length of Pipe
3	2	5 @ 2'-7"	12'-11"	7 @ 2'-7"	18'-1"	11 @ 2'-7"	28'-5"
3	3	7 @ 2'-7"	18'-1"	10 @ 2'-7"	25'-10"	16 @ 2'-7"	41'-4"
4	2	5 @ 3'-7"	17'-11"	7 @ 3'-7"	25'-1"	12 @ 3'-7"	43'-0"
4	3	7 @ 3'-7"	25'-1"	10 @ 3'-7"	35'-10"	17 @ 3'-7"	60'-11"
4	4	9 @ 3'-7"	32'-3"	13 @ 3'-7"	46'-7"	22 @ 3'-7"	78'-10"
5	2	5 @ 4'-7"	22'-11"	7 @ 4'-7"	32'-1"	12 @ 4'-7"	55'-0"
5	3	7 @ 4'-7"	32'-1"	11 @ 4'-7"	50'-5"	17 @ 4'-7"	77'-11"
5	4	9 @ 4'-7"	41'-3"	14 @ 4'-7"	64'-2"	22 @ 4'-7"	100'-10"
5	5	11 @ 4'-7"	50'-5"	17 @ 4'-7"	77'-11"	27 @ 4'-7"	123'-9"
6	2	5 @ 5'-7"	27'-11"	8 @ 5'-7"	44'-8"	12 @ 5'-7"	67'-0"
6	3	7 @ 5'-7"	39'-1"	11 @ 5'-7"	61'-5"	17 @ 5'-7"	94'-11"
6	4	10 @ 5'-7"	55'-10"	14 @ 5'-7"	78'-2"	23 @ 5'-7"	128'-5"
6	5	12 @ 5'-7"	67'-0"	17 @ 5'-7"	94'-11"	28 @ 5'-7"	156'-4"
6	6	14 @ 5'-7"	78'-2"	20 @ 5'-7"	111'-8"	33 @ 5'-7"	184'-3"

Follow (<2 FT Cover) table for all other sizes

FILE NAME = District 2 Standard	USER NAME = IDOT/District 2	DESIGNED -	REVISED - 5-09-14	STATE OF ILLINOIS DEPARTMENT OF TRANSPORTATION	REGION 2 / DISTRICT 2 STANDARD	F.A. RTE.	SECTION	COUNTY	TOTAL SHEETS / SHEET NO.
		DRAWN -	REVISED -						
	PLOT SCALE = 1.0000 '/ in.	CHECKED -	REVISED -					CONTRACT NO.	
	PLOT DATE = Thu Nov 13 11:28:55 2014	DATE -	REVISED -		SCALE: SHEET NO. OF SHEETS STA. TO STA.	FED. ROAD DIST. NO.	ILLINOIS	FED. AID PROJECT	

TRAVERSABLE PIPE GRATE FOR PARALLEL DRAINAGE STRUCTURE

PIPE GRATE SCHEDULE FOR PARALLEL PIPE CULVERTS 15" THRU 84" DIA.

Pipe I.D.	SLOPE OF END SECTION					
	1:4		1:6		1:10	
	Pipes No. / Length	Total Length of Pipe	Pipes No. / Length	Total Length of Pipe	Pipes No. / Length	Total Length of Pipe
15''	3 @ 0'-11''	2'-9''	4 @ 0'-11''	3'-8''	6 @ 0'-11''	5'-6''
18''	3 @ 1'-1''	3'-3''	5 @ 1'-1''	5'-5''	7 @ 1'-1''	7'-7''
21''	4 @ 1'-5''	5'-8''	5 @ 1'-5''	7'-1''	9 @ 1'-5''	12'-9''
24''	5 @ 1'-7''	7'-11''	6 @ 1'-7''	9'-6''	10 @ 1'-7''	15'-10''
30''	6 @ 2'-1''	12'-6''	8 @ 2'-1''	16'-8''	13 @ 2'-1''	27'-1''
36''	7 @ 2'-7''	18'-1''	10 @ 2'-7''	25'-10''	15 @ 2'-7''	38'-9''
42''	8 @ 3'-1''	24'-8''	11 @ 3'-1''	33'-11''	18 @ 3'-1''	55'-6''
48''	9 @ 3'-7''	32'-3''	13 @ 3'-7''	46'-7''	21 @ 3'-7''	75'-3''
54''	10 @ 4'-1''	40'-10''	14 @ 4'-1''	57'-2''	23 @ 4'-1''	93'-11''
60''	11 @ 4'-7''	50'-5''	15 @ 4'-7''	68'-9''	25 @ 4'-7''	114'-7''
66''	12 @ 5'-1''	61'-0''	17 @ 5'-1''	86'-5''	28 @ 5'-1''	142'-4''
72''	13 @ 5'-7''	72'-7''	18 @ 5'-7''	100'-6''	30 @ 5'-7''	167'-6''
78''	14 @ 6'-1''	85'-2''	20 @ 6'-1''	121'-8''	33 @ 6'-1''	200'-9''
84''	15 @ 6'-7''	98'-9''	21 @ 6'-7''	138'-3''	35 @ 6'-7''	230'-5''

TRAVERSABLE PIPE GRATE FOR PARALLEL DRAINAGE STRUCTURE

PIPE GRATE SCHEDULE FOR PARALLEL PIPE ARCH CULVERTS 15" THRU 84" DIA.

SLOPE OF END SECTION						
Pipe I.D.	Table IIA, Corrugation : 2⅔" x ½"					
	1:4		1:6		1:10	
	Pipes No. / Length	Total Length of Pipe	Pipes No. / Length	Total Length of Pipe	Pipes No. / Length	Total Length of Pipe
15"	2 @ 1'-1"	2'-2"	3 @ 1'-1"	3'-3"	5 @ 1'-1"	5'-5"
18"	3 @ 1'-5"	4'-3"	4 @ 1'-5"	5'-8"	6 @ 1-5"	8'-6"
21"	3 @ 1'-7"	4'-9"	5 @ 1'-7"	7'-11"	7 @ 1'-7"	11'-1"
24"	4 @ 1'-11"	7'-8"	5 @ 1'-11"	9'-7"	8 @ 1'-11"	15'-4"
30"	4 @ 2'-7"	10'-4"	6 @ 2'-7"	15'-6"	10 @ 2'-7"	25'-10"
36"	5 @ 3'-1"	15'-5"	7 @ 3'-1"	21'-7"	12 @ 3'-1"	37'-0"
42"	6 @ 3'-9"	22'-6"	9 @ 3'-9"	33'-9"	14 @ 3'-9"	52'-6"
48"	7 @ 4'-5"	30'-11"	10 @ 4'-5"	44'-2"	16 @ 4'-5"	70'-8"
54"	8 @ 4'-11"	39'-4"	11 @ 4'-11"	54'-1"	18 @ 4'-11"	88'-6"
60"	8 @ 5'-7"	44'-8"	12 @ 5'-7"	67'-0"	20 @ 5'-7"	111'-8"
66"	9 @ 6'-1"	54'-9"	13 @ 6'-1"	79'-1"	22 @ 6'-1"	133'-10"
72"	10 @ 6'-7"	65'-10"	15 @ 6'-7"	98'-9"	24 @ 6'-7"	158'-0"
78"	-	-	-	-	-	-
84"	-	-	-	-	-	-

PIPE GRATE SCHEDULE FOR PARALLEL PIPE ARCH CULVERTS 15" THRU 84" DIA.

SLOPE OF END SECTION						
Pipe I.D.	Table IIA, Corrugation : 3" x 1"					
	1:4		1:6		1:10	
	Pipes No. / Length	Total Length of Pipe	Pipes No. / Length	Total Length of Pipe	Pipes No. / Length	Total Length of Pipe
15"	-	-	-	-	-	-
18"	-	-	-	-	-	-
21"	-	-	-	-	-	-
24"	-	-	-	-	-	-
30"	-	-	-	-	-	-
36"	6 @ 2'-11"	17'-6"	8 @ 2'-11"	23'-4"	13 @ 2'-11"	37'-11"
42"	7 @ 3'-5"	23'-11"	10 @ 3'-5"	34'-2"	15 @ 3'-5"	51'-3"
48"	8 @ 4'-1"	32'-8"	11 @ 4'-1"	44'-11"	18 @ 4'-1"	73'-6"
54"	9 @ 4'-7"	41'-3"	12 @ 4'-7"	55'-0"	20 @ 4'-7"	91'-10"
60"	9 @ 5'-1"	45'-9"	14 @ 5'-1"	71'-2"	22 @ 5'-1"	111'-10"
66"	10 @ 5'-9"	57'-6"	15 @ 5'-9"	86'-3"	24 @ 5'-9"	138'-0"
72"	11 @ 6'-5"	70'-7"	16 @ 6'-5"	102'-8"	26 @ 6'-5"	166'-10"
78"	12 @ 6'-11"	83'-0"	17 @ 6'-11"	117'-7"	28 @ 6'-11"	193'-8"
84"	12 @ 7'-7"	91'-0"	18 @ 7'-7"	136'-6"	30 @ 7'-7"	227'-6"

TRAVERSABLE PIPE GRATE FOR PARALLEL DRAINAGE STRUCTURE

PIPE GRATE SCHEDULE FOR PARALLEL ELLIPTICAL PIPE CULVERTS 15" THRU 72" DIA.

Pipe I.D.	SLOPE OF END SECTION					
	1:4		1:6		1:10	
	Pipes No. / Length	Total Length of Pipe	Pipes No. / Length	Total Length of Pipe	Pipes No. / Length	Total Length of Pipe
15"	3 @ 2'-7"	7'-9"	5 @ 2'-7"	12'-11"	7 @ 2'-7"	18'-1"
18"	3 @ 2'-7"	7'-9"	5 @ 2'-7"	12'-11"	7 @ 2'-7"	18'-1"
21"	5 @ 3'-3"	16'-3"	7 @ 3'-3"	22'-9"	12 @ 3'-3"	39'-0"
24"	5 @ 3'-3"	16'-3"	7 @ 3'-3"	22'-9"	12 @ 3'-3"	39'-0"
27"	6 @ 3'-7"	21'-6"	8 @ 3'-7"	28'-8"	13 @ 3'-7"	46'-7"
30"	6 @ 3'-11"	23'-6"	9 @ 3'-11"	35'-3"	14 @ 3'-11"	54'-10"
36"	7 @ 4'-7"	32'-1"	10 @ 4'-7"	45'-10"	16 @ 4'-7"	73'-4"
42"	8 @ 5'-5"	43'-4"	11 @ 5'-5"	59'-7"	18 @ 5'-5"	97'-6"
48"	9 @ 6'-1"	54'-9"	13 @ 6'-1"	79'-1"	20 @ 6'-1"	121'-8"
54"	10 @ 6'-9"	67'-6"	14 @ 6'-9"	94'-6"	23 @ 6'-9"	155'-3"
60"	11 @ 7'-7"	83'-5"	15 @ 7'-7"	113'-9"	25 @ 7'-7"	189'-7"
66"	11 @ 8'-3"	90'-9"	17 @ 8'-3"	140'-3"	27 @ 8'-3"	222'-9"
72"	12 @ 8'-11"	107'-0"	18 @ 8'-11"	160'-6"	30 @ 8'-11"	267'-6"

SLOPED METAL END SECTIONS WITH GRATE

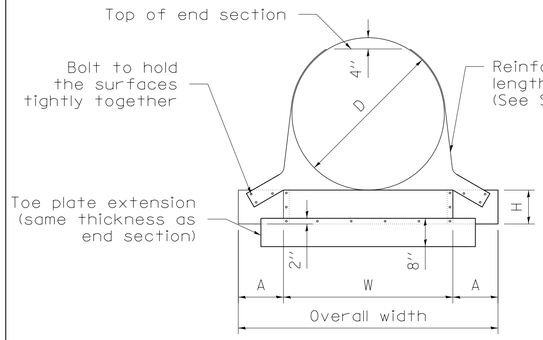

FRONT VIEW

ROUND PIPE CULVERT

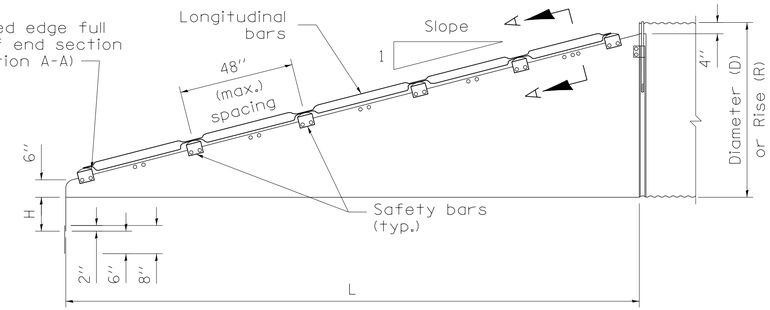

ELEVATION

CROSS DRAINAGE END SECTION

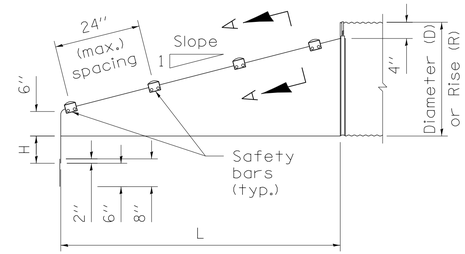

ELEVATION

PARALLEL DRAINAGE END SECTION

GENERAL NOTES

1. USE END SECTIONS ON 1V:4H TO 1V:6H SLOPES ONLY. USE TOE PLATE EXTENSION.
2. A 1:6 SLOPED END SECTION WILL BE USED FOR ALL PARALLEL DRAINAGE STRUCTURE END SECTIONS.
3. FABRICATE SAFETY AND LONGITUDINAL BARS FROM STEEL PIPE CONFORMING TO ASTM A53 SCHEDULE 40 SPECIFICATIONS. GALVANIZE BARS HOT DIPPED AFTER FABRICATION.
4. A LONGITUDINAL BAR IS REQUIRED FOR CROSS DRAINAGE END SECTIONS WHEN THE SPAN IS GREATER THAN 30''. USE ADDITIONAL LONGITUDINAL BARS IF SPACING EXCEEDS 30'' ON LARGER END SECTIONS.
5. SAFETY AND LONGITUDINAL BARS ARE NOT REQUIRED ON 30'' AND SMALLER CROSS DRAINAGE END SECTIONS.
6. THESE END SECTIONS WILL BE PAID FOR AT THE CONTRACT UNIT PRICE PER EACH FOR SLOPED METAL END SECTIONS WITH GRATE OF THE DIAMETER SPECIFIED, WHICH SHALL INCLUDE FURNISHING AND INSTALLING THE END SECTION COMPLETE IN PLACE, INCLUDING THE TOE PLATE, EXCAVATING, BACKFILLING, CONNECTING TO THE PIPE, AND CROSS DRAINAGE BARS.

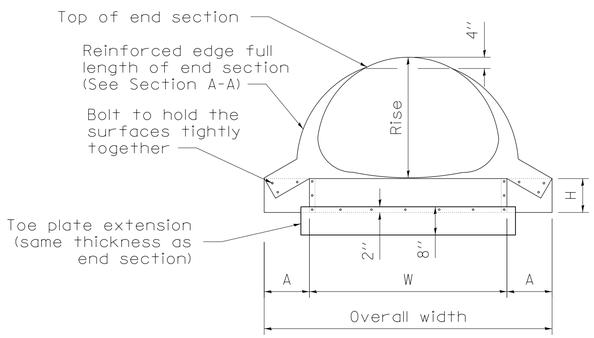

FRONT VIEW

PIPE ARCH CULVERT

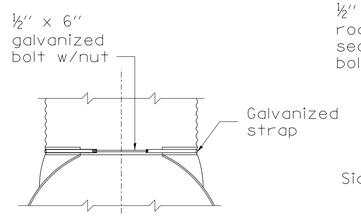

FOR METAL ROUND PIPES 15'' THRU 24''

TYPE #1

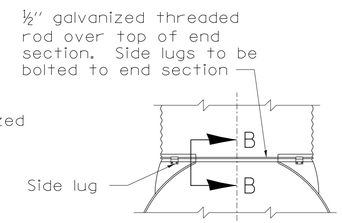

FOR METAL ROUND PIPES 30'' AND LARGER. FOR PIPE ARCHES 21'' X 15'' AND LARGER

TYPE #2

CONNECTOR DETAILS

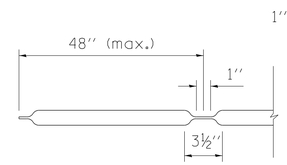

LONGITUDINAL DRAINAGE BAR

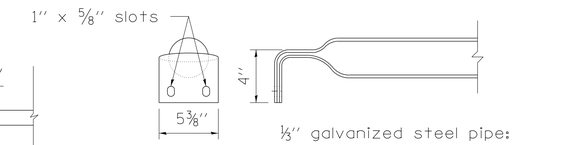

⅓'' galvanized steel pipe: flatten end, then bend outside 4'' to match end section sides.

PARALLEL BARS

SAFETY BAR DETAILS

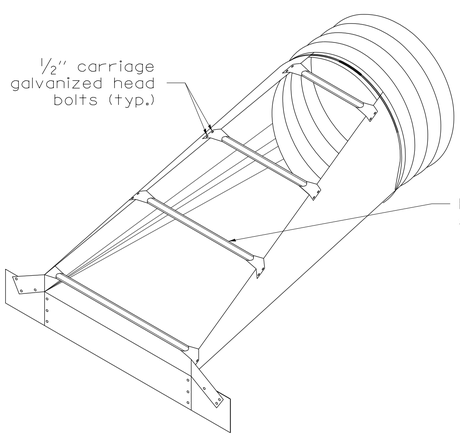

PARALLEL DRAINAGE END SECTION

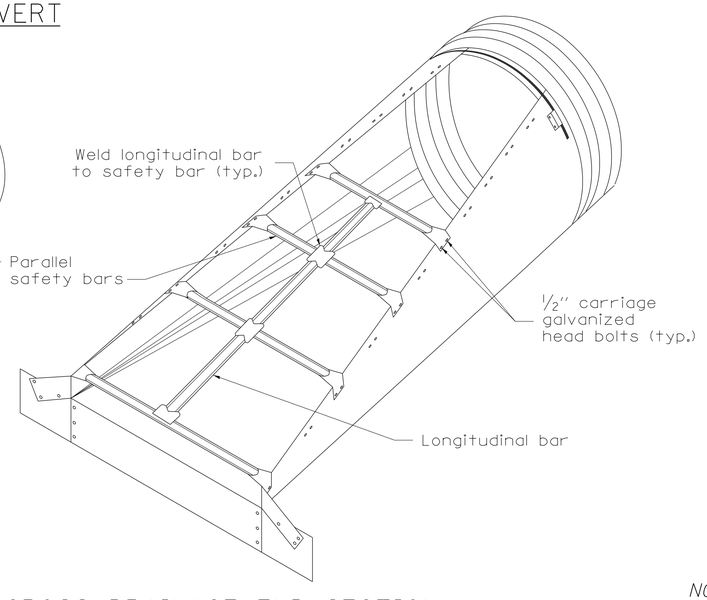

CROSS DRAINAGE END SECTION

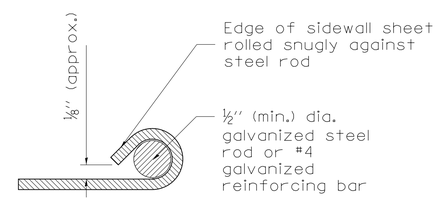

SECTION A-A

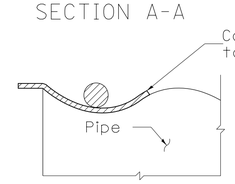

SECTION B-B

NO SCALE

METAL END SECTIONS FOR ROUND PIPE CULVERT

PIPE SIZE * INCHES	METAL THICK (MIN.) INCH/GAGE	DIMENSIONS IN INCHES					
		A	H	W	OVERALL WIDTH	L	
						Slope=4	Slope=6
24	0.064/16	8	6	30	46	55	83
30	0.109/12	12	9	36	60	79	118
36	0.109/12	12	9	42	66	102	154
42	0.109/12	16	12	48	80	126	189
48	0.109/12	16	12	54	86	150	224
54	0.109/12	16	12	60	92	173	260
60	0.109/12	16	12	66	98	197	295

METAL END SECTIONS FOR PIPE ARCH CULVERT

PIPE SIZE (INCHES)			METAL THICK (MIN.) INCH/GAGE	DIMENSIONS (INCHES)					
EQUIV. *	SPAN	RISE		A	H	W	OVERALL WIDTH	L	
								Slope=4	Slope=6
24	28	20	0.064/16	8	6	33	49	40	60
30	35	24	0.109/12	12	9	40	64	55	83
36	41	29	0.109/12	12	9	47	71	75	112
42	48	32	0.109/12	16	12	54	86	90	136
48	56	37	0.109/12	16	12	62	94	110	165
54	63	42	0.109/12	16	12	69	101	130	195
60	70	46	0.109/12	16	12	76	107	146	218
72	82	56	0.109/12	16	12	88	120	185	278

HOT–MIX ASPHALT APPROACHES AND MAILBOX RETURNS

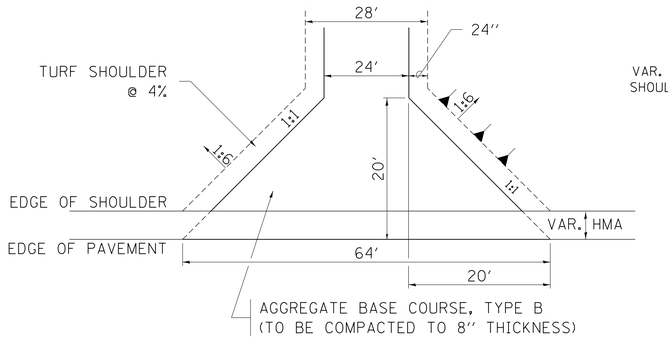

FIELD ENTRANCE

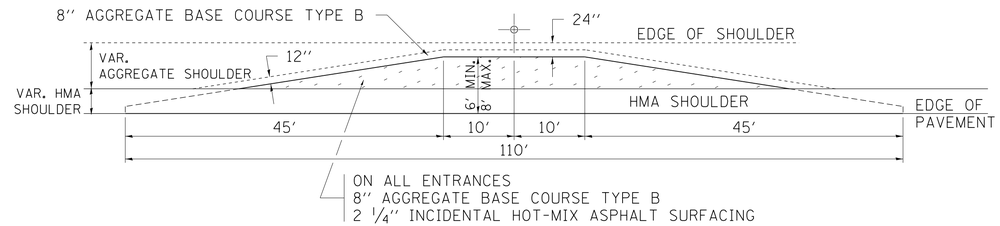

MAILBOX TURNOUT

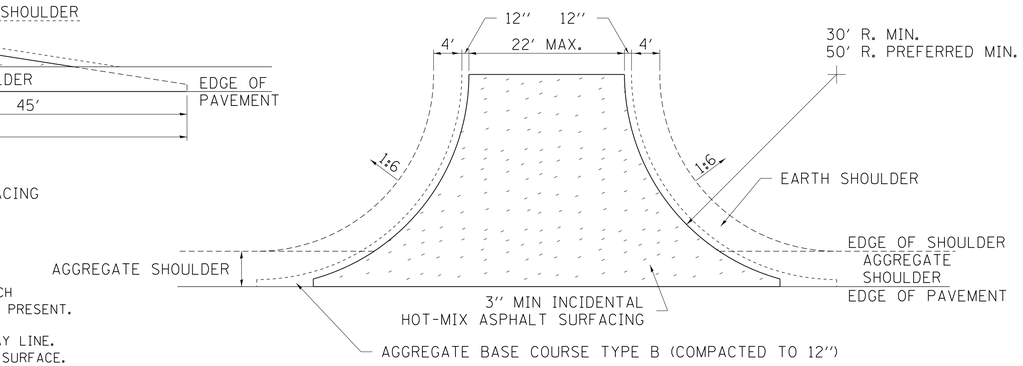

SIDE ROAD RETURN/EARTH SHOULDER

NOTE

1. TURNOUTS ARE TO BE CONSTRUCTED ON THE APPROACH SIDE OF ALL PE & CE REGARDLESS IF A MAILBOX IS PRESENT.
2. ALL PE & CE ARE TO BE SURFACED TO RIGHT OF WAY LINE. AREA BEHIND RIGHT OF WAY SHALL MATCH EXISTING SURFACE.
3. ALL PE & CE TO BE CONSTRUCTED WITH AN 8″ AGGREGATE BASE COURSE, TYPE B AND WITH A 2 1/4″ INCIDENTAL HOT-MIX ASPHALT SURFACING, UNLESS OTHERWISE NOTED.
4. FE ARE TO BE AGGREGATE TO RIGHT OF WAY OR TOUCH DOWN, WHICH EVER IS GREATEST.
5. EXCAVATION REQUIRED FOR PLACEMENT OF AGGREGATE BASE COURSE SHALL BE INCLUDED IN THE COST OF THE AGGREGATE BASE COURSE.
6. ON ENTRANCES THE CONTRACTOR HAS THE OPTION OF USING RADIUS RETURNS. USE RADII OF 20′ TO 60′.
7. SIDE ROADS SHALL HAVE 3″ INCIDENTAL PLACED IN TWO 1½″ LIFTS.

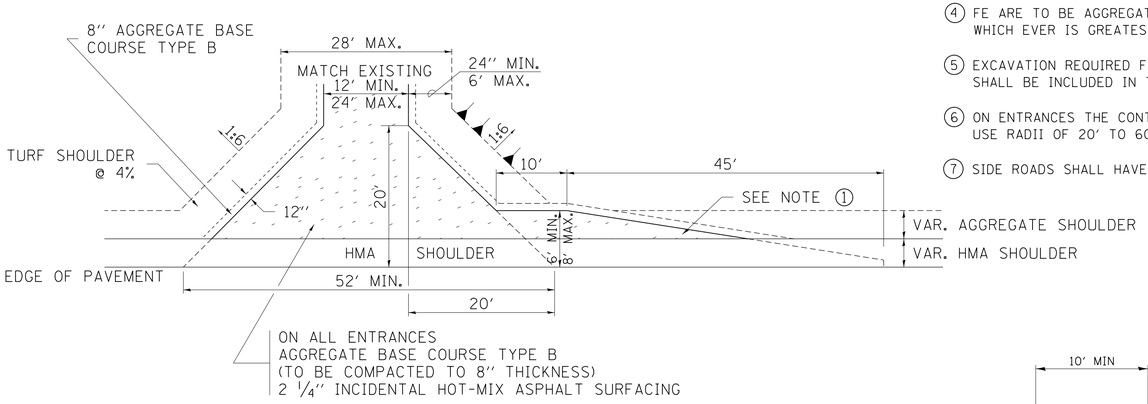

PRIVATE ENTRANCE

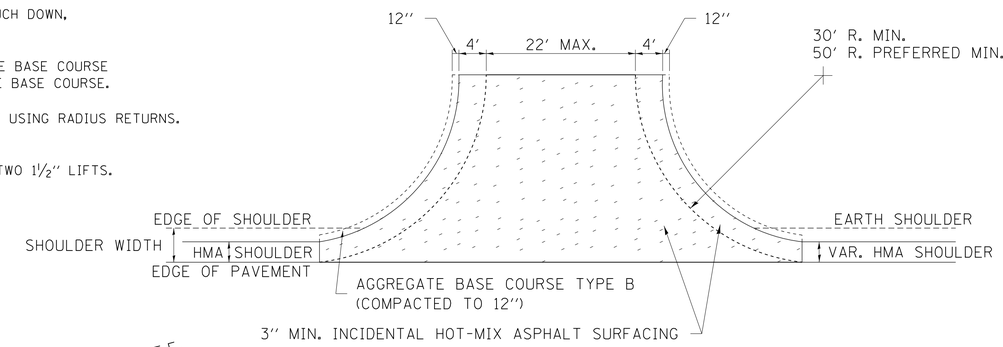

SIDE ROAD RETURN/HMA SHOULDER

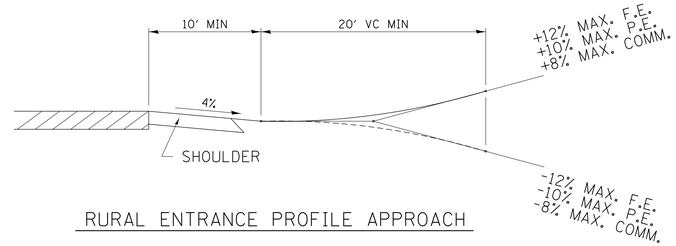

RURAL ENTRANCE PROFILE APPROACH

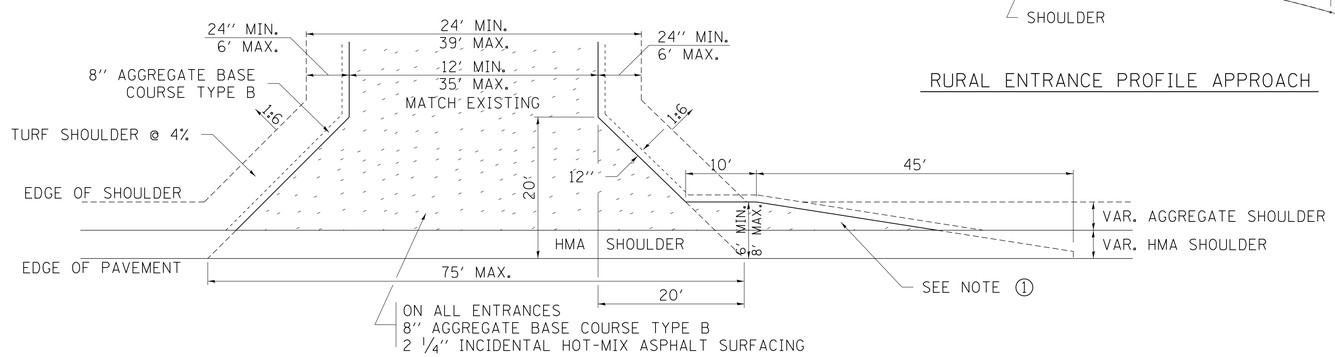

COMMERCIAL ENTRANCE

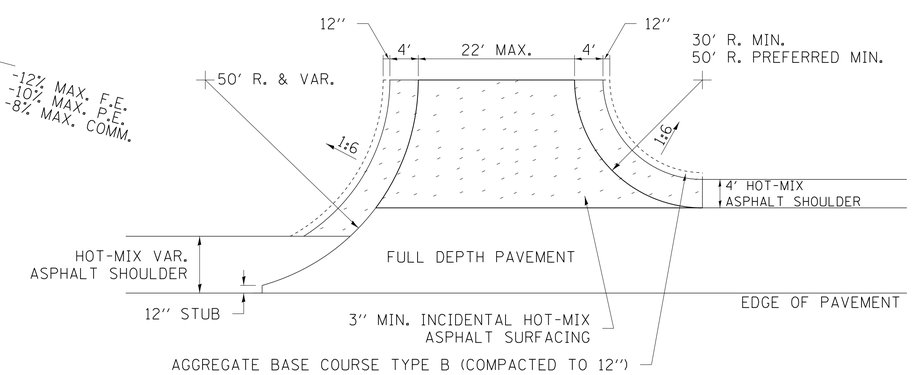

SIDE ROAD RETURN WITH RIGHT TURN LANE

FILE NAME = District 2 Standard	USER NAME = IDOT/District 2	DESIGNED -	REVISED - 6-27-14	STATE OF ILLINOIS DEPARTMENT OF TRANSPORTATION	REGION 2 / DISTRICT 2 STANDARD	F.A. RTE.	SECTION	COUNTY	TOTAL SHEETS / SHEET NO.
		DRAWN -	REVISED - 8-27-13					CONTRACT NO.	
	PLOT SCALE = 1.0000 ′ / in.	CHECKED -	REVISED - 12-07-10						
	PLOT DATE = Thu Nov 13 11:28:59 2014	DATE -	REVISED -		SCALE: SHEET NO. OF SHEETS STA. TO STA.	FED. ROAD DIST. NO.	ILLINOIS	FED. AID PROJECT	

ENTRANCE APPROACHES – URBAN AREA

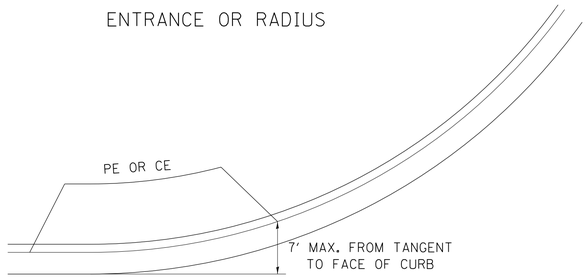

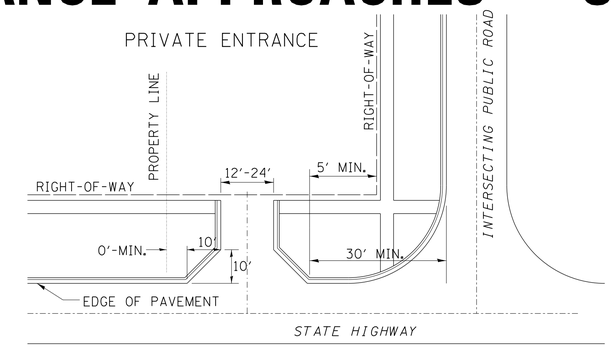

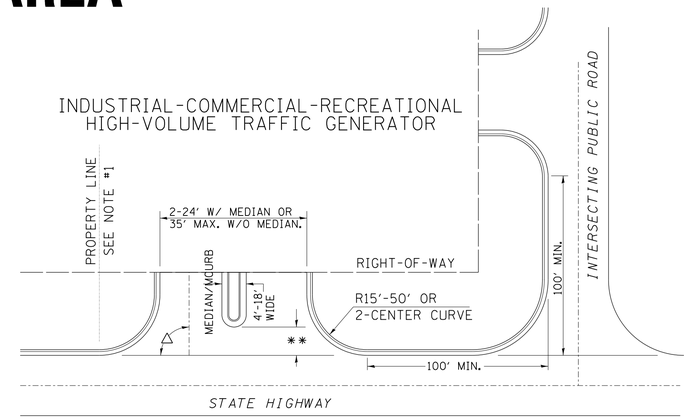

A MINIMUM OF 440 FEET SHALL BE MAINTAINED BETWEEN CENTER LINES OF ADJACENT DRIVEWAYS.

△ 90° DESIRABLE. 45° MIN. ANGLE PERMITTED ONLY FOR ONE-WAY DRIVEWAYS.
60° MIN. ANGLE FOR TWO-WAY DRIVEWAYS.

NOTE: #1 ENCROACHMENT ON THE ADJACENT PROPERTY OWNER LAND
REQUIRES HIS OR HER WRITTEN APPROVAL.

** 4′-10′ IF HIGHWAY CURBED.
AT EDGE OF SHOULDER IF HIGHWAY UNCURBED.

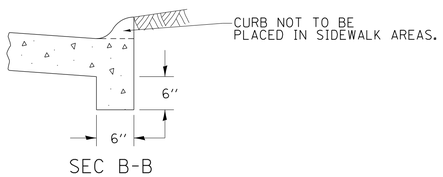

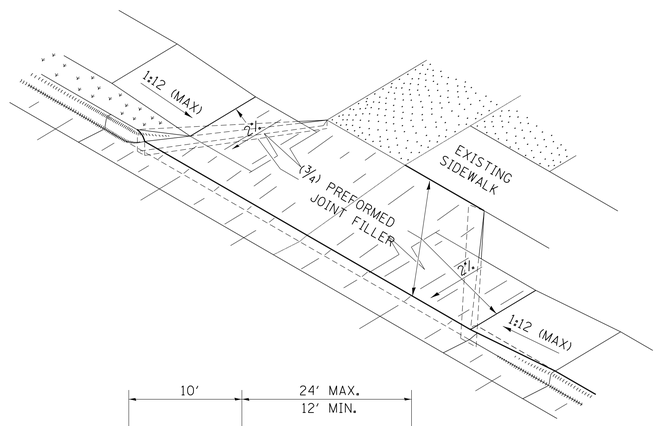

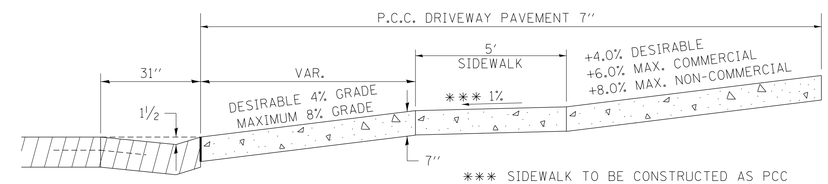

*** SIDEWALK TO BE CONSTRUCTED AS PCC
DRIVEWAY PAVEMENT 7″ THROUGH THE
WIDTH OF THE DRIVEWAY. SEE DIST. STD. 35.4

ASCENDING APPROACH

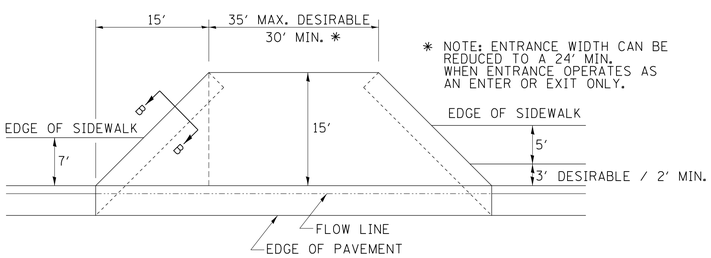

LOW TO MODERATE VOLUME COMMERCIAL ENTRANCE

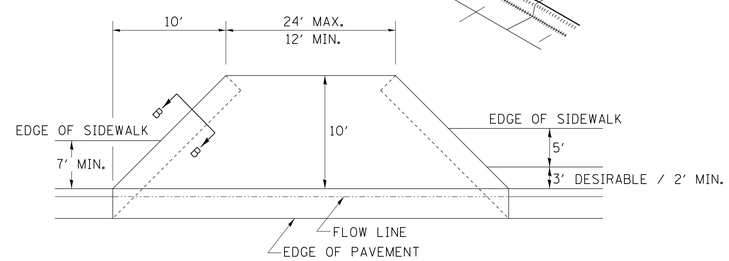

PRIVATE ENTRANCE

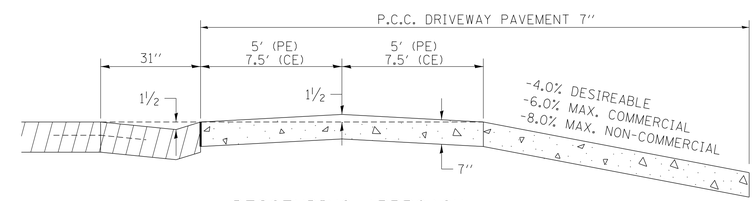

DESCENDING APPROACH
(NO SIDEWALK)

NOTE: CURVED ENTRANCE RETURNS MAY
BE USED FOR LOW TO MODERATE
VOLUME LOCATIONS WITH REVIEW ON
A CASE-BY-CASE BASIS.

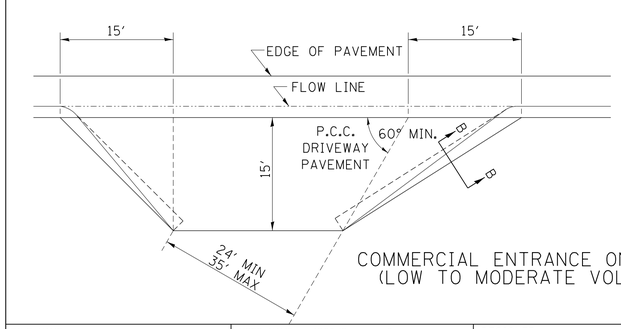

COMMERCIAL ENTRANCE ON SKEW
(LOW TO MODERATE VOLUME)

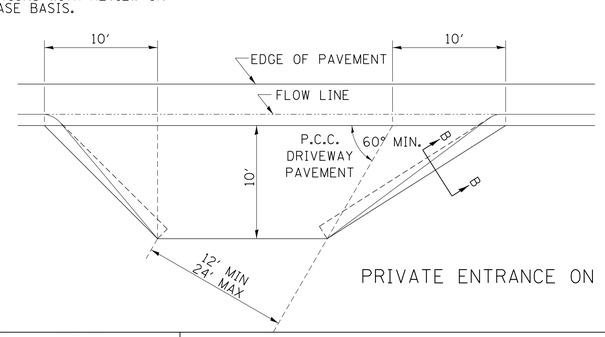

PRIVATE ENTRANCE ON SKEW

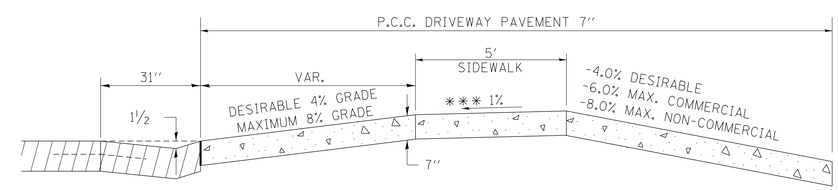

DESCENDING APPROACH
(WITH SIDEWALK)

FILE NAME = District 2 Standard	USER NAME = IDOT/District 2	DESIGNED -	REVISED - 6-27-14	STATE OF ILLINOIS DEPARTMENT OF TRANSPORTATION	REGION 2 / DISTRICT 2 STANDARD	F.A. RTE.	SECTION	COUNTY	TOTAL SHEETS / SHEET NO.
		DRAWN -	REVISED - 12-07-10						
	PLOT SCALE = 1.0000 ′ / in.	CHECKED -	REVISED -					CONTRACT NO.	
	PLOT DATE = Thu Nov 13 11:28:59 2014	DATE -	REVISED -		SCALE: SHEET NO. OF SHEETS STA. TO STA.	FED. ROAD DIST. NO.	ILLINOIS	FED. AID PROJECT	

SEWER AND WATER MAIN CROSSINGS

THIS DETAIL IS FOR UNKNOWN UTILITIES UNLESS QUANTITIES ARE INCLUDED IN THE PLANS THE EXTRA WORK WILL BE PAID FOR IN ACCORDANCE WITH ARTICLE 109.04.

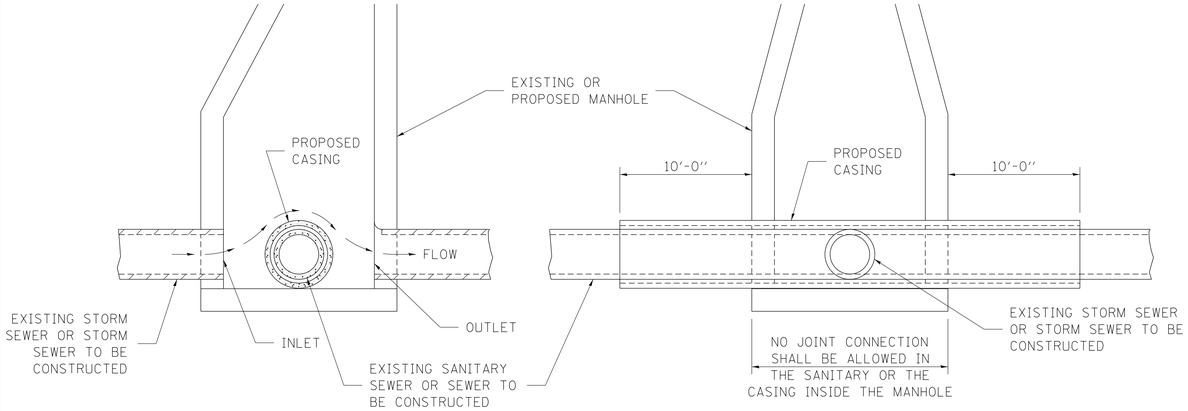

ELEVATION - ECCENTRIC

ELEVATION - CONCENTRIC

CASING SHALL BE CAST IRON WITH AN INSIDE DIAMETER 2" LARGER IN DIAMETER THAN ENCASED PIPE OUTSIDE DIAMETER WITH BOTH ENDS OF CASING SEALED

AT GRADE CROSSING OF SANITARY AND STORM SEWER

ALL DIMENSIONS ARE IN INCHES UNLESS OTHERWISE NOTED

WHEN PROPOSED SEWER (OR WATER) IS LOCATED 10'-0" OR MORE FROM EXISTING WATER (OR SEWER) NO SPECIAL CONSTRUCTION REQUIRED.

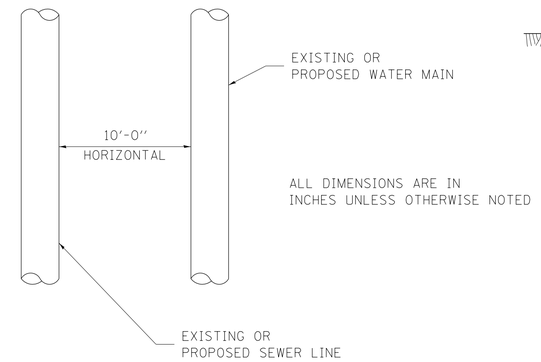

PLAN VIEW

WHEN PROPOSED SEWER (OR WATER) IS LOCATED LESS THAN 10'-0" FROM EXISTING WATER (OR SEWER) DETAILS BELOW SHALL APPLY.

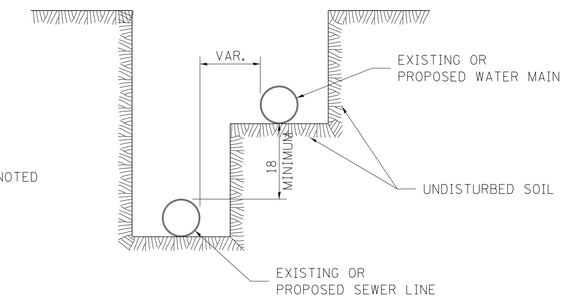

WATER AND SEWER HORIZONTAL SEPARATION REQUIREMENTS

POINT LOADS SHALL NOT BE ALLOWED BETWEEN SEWER OR SEWER CASING AND WATER MAIN

PROVIDE ADEQUATE SUPPORT FOR EXISTING WATER MAIN TO PREVENT DAMAGE DUE TO SETTLEMENT OF SEWER TRENCH

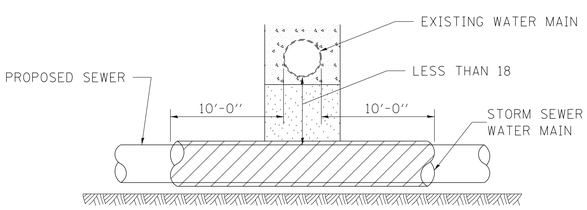

PROVIDE ADEQUATE SUPPORT FOR EXISTING WATER MAIN TO PREVENT DAMAGE DUE TO SETTLEMENT OF SEWER TRENCH

MAINTAIN 18 MINIMUM VERTICAL SEPARATION FOR 10 FT. HORIZONTALLY

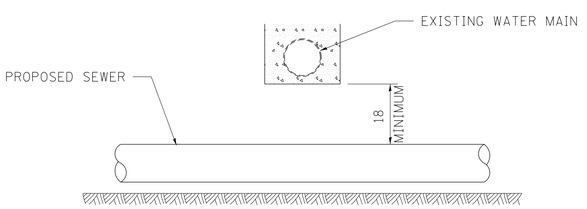

ALL DIMENSIONS ARE IN INCHES UNLESS OTHERWISE NOTED

PROPOSED SEWER LINE BELOW EXISTING WATER MAIN

PROVIDE ADEQUATE SUPPORT FOR EXISTING SEWER LINE TO PREVENT DAMAGE DUE TO SETTLEMENT

PLACE TRENCH BACKFILL FOR 10 FT. ON EITHER SIDE OF SEWER LINE

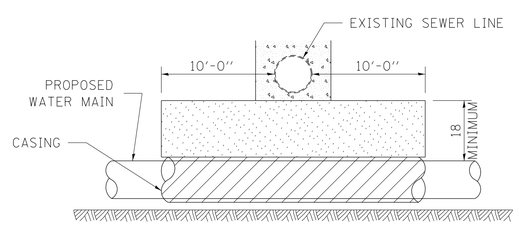

CASING SHALL BE CAST IRON WITH AN INSIDE DIAMETER 2" LARGER IN DIAMETER THAN ENCASED PIPE OUTSIDE DIAMETER WITH BOTH ENDS OF CASING SEALED

PROVIDE ADEQUATE SUPPORT FOR EXISTING WATER MAIN TO PREVENT DAMAGE DUE TO SETTLEMENT OF SEWER TRENCH

MAINTAIN 18 MINIMUM VERTICAL SEPARATION FOR 10 FT. HORIZONTALLY

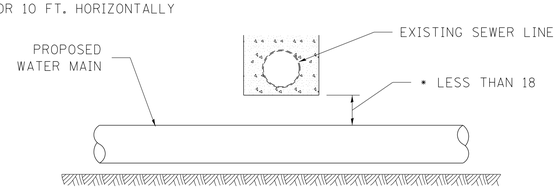

* NOT ALLOWED
MUST MAINTAIN 18 VERTICAL SEPARATION

ALL DIMENSIONS ARE IN INCHES UNLESS OTHERWISE NOTED

PROPOSED WATER MAIN BELOW EXISTING SEWER LINE

POINT LOADS SHALL NOT BE ALLOWED BETWEEN WATER MAIN OR WATER MAIN CASING AND SEWER

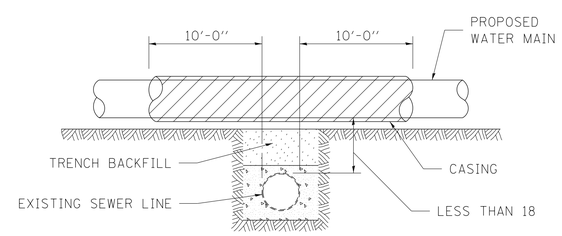

CASING SHALL BE CAST IRON WITH AN INSIDE DIAMETER 2" LARGER IN DIAMETER THAN ENCASED PIPE OUTSIDE DIAMETER WITH BOTH ENDS OF CASING SEALED

ALL DIMENSIONS ARE IN INCHES UNLESS OTHERWISE NOTED

PROPOSED WATER MAIN ABOVE EXISTING SEWER LINE

PROVIDE ADEQUATE SUPPORT FOR SEWER TO PREVENT SETTLING AND BREAKING THE WATER MAIN.

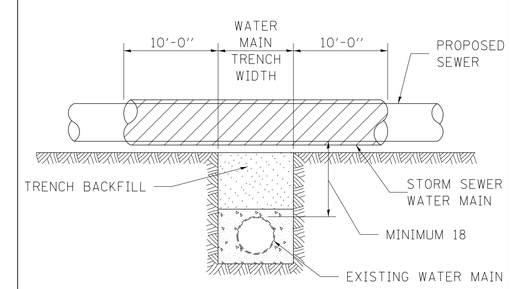

ALL DIMENSIONS ARE IN INCHES UNLESS OTHERWISE NOTED

EXISTING WATER MAIN BELOW PROPOSED SEWER LINE WITH MINIMUM 18 VERTICAL SEPARATION

FILE NAME = District 2 Standard	USER NAME = IDOT/District 2	DESIGNED -	REVISED - 10-17-11	STATE OF ILLINOIS DEPARTMENT OF TRANSPORTATION	REGION 2 / DISTRICT 2 STANDARD	F.A. RTE.	SECTION	COUNTY	TOTAL SHEETS / SHEET NO.
		DRAWN -	REVISED -						
	PLOT SCALE = 1.0000 ' / in.	CHECKED -	REVISED -					CONTRACT NO.	
	PLOT DATE = Thu Nov 13 11:29:00 2014	DATE -	REVISED -		SCALE: SHEET NO. OF SHEETS STA. TO STA.	FED. ROAD DIST. NO.	ILLINOIS	FED. AID PROJECT	

CONCRETE COLLARS FOR PIPE OR BOX CULVERT EXTENSIONS

Bill of Materials

h BAR	U BAR DIMENSIONS				U_1 BAR DIMENSIONS				REINF. BARS	EXPANSION BOLTS	CONCRETE COLLAR
Quantity	X	Y	Length	Quantity	X	Z	Length	Quantity	LBS	EACH	Cu. Yds.
								Total			

All h Bars 18 Long

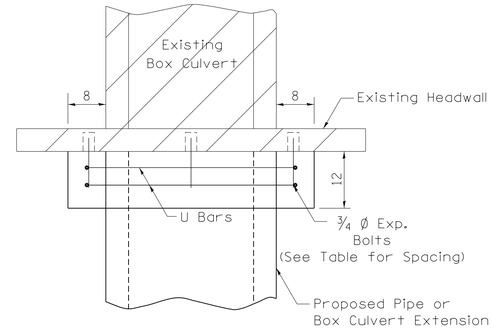

PLAN OF CULVERT WITH STRAIGHT HEADWALL

General Notes

Concrete Collars shall be constructed of Class SI Concrete in accordance with Section 503 of the Standard Specifications

Reinforcement bars shall conform to Section 508 of the Standard Specifications.

The concrete will be paid for at the contract unit price per cubic yard for CONCRETE COLLAR. Reinforcement will be paid for at the contract unit price per pound for REINFORCEMENT BARS. Expansion Bolts, when required, will be paid for at the contract unit price each for EXPANSION BOLTS of the size indicated, which price shall include furnishing, drilling holes, and installing the expansion bolts complete in place. These bolts shall extend at least 8 inches into the new concrete.

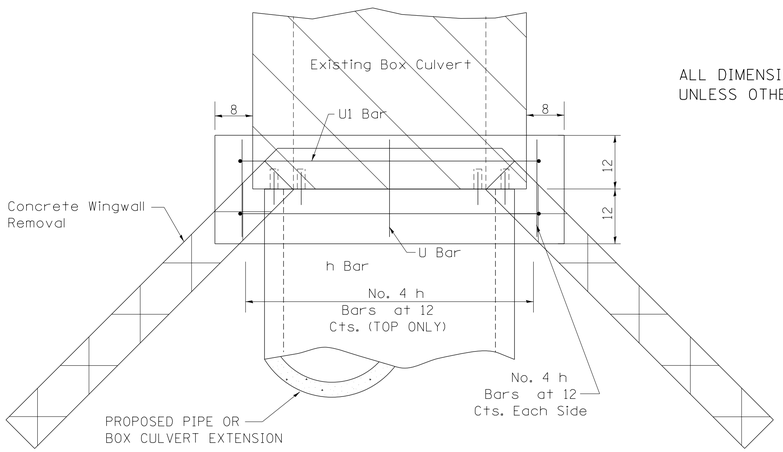

PLAN OF CULVERT WITH ANGLED WING WALLS

ALL DIMENSIONS ARE IN INCHES UNLESS OTHERWISE NOTED.

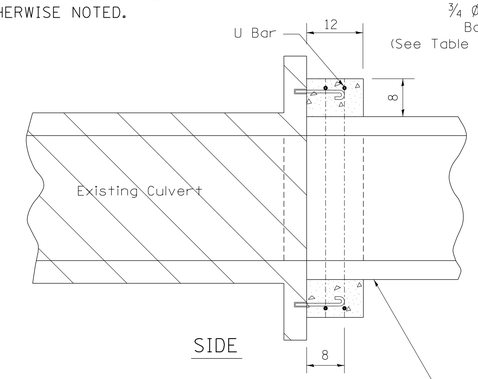

SIDE

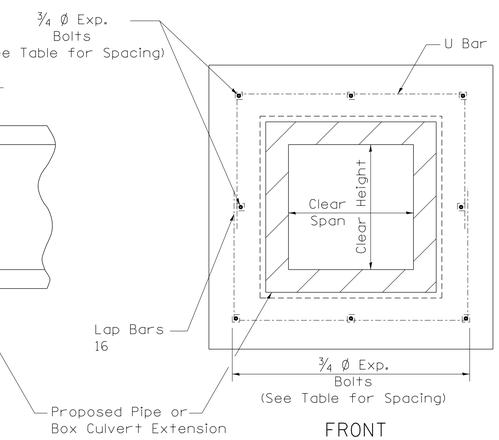

FRONT

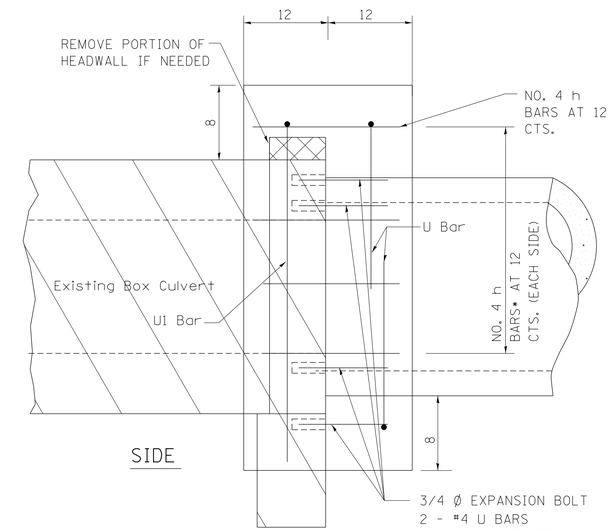

SIDE

PLACEMENT DETAILS FOR EXPANSION BOLTS

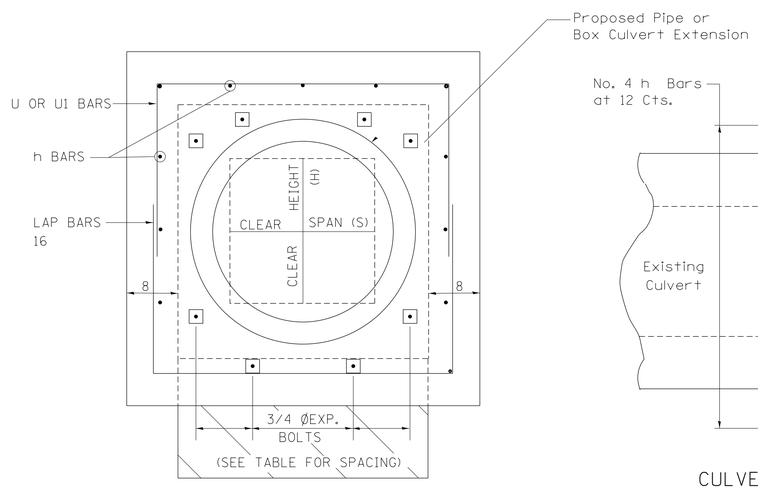

FRONT

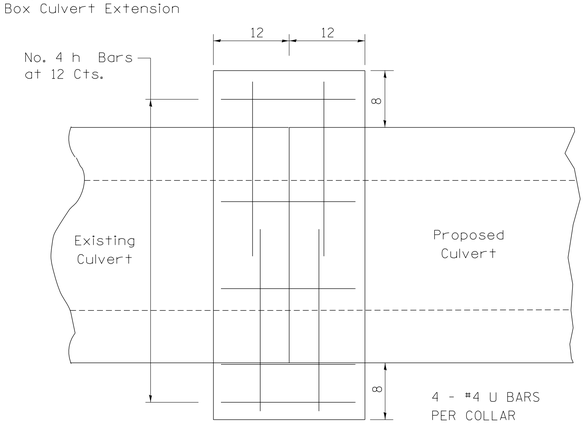

CULVERT CONNECTION WITHOUT EXISTING HEADWALL

(#4) U BAR

(#4) U1 BAR

H OR S	NUMBER OF EXPANSION BOLTS REQUIRED PER SIDE			
	EXTENSIONS < 15'		EXTENSIONS > 15'	
	NUMBER	SPACING	NUMBER	SPACING
24	*		*	
30	2	18	2	18
36	2	24	2	24
48	3	18	3	18
60	4	16	3	24
72	5	15	4	20
84	5	18	4	24
96	6	15	5	21
108	6	19	5	24
120	7	18	6	21
132	8	17	6	24
144	8	19	7	22

* MINIMUM ONE PER SIDE

URBAN LANE INSIDE CLOSURE, MULTILANE, 2–WAY, WITH MOUNTABLE MEDIAN

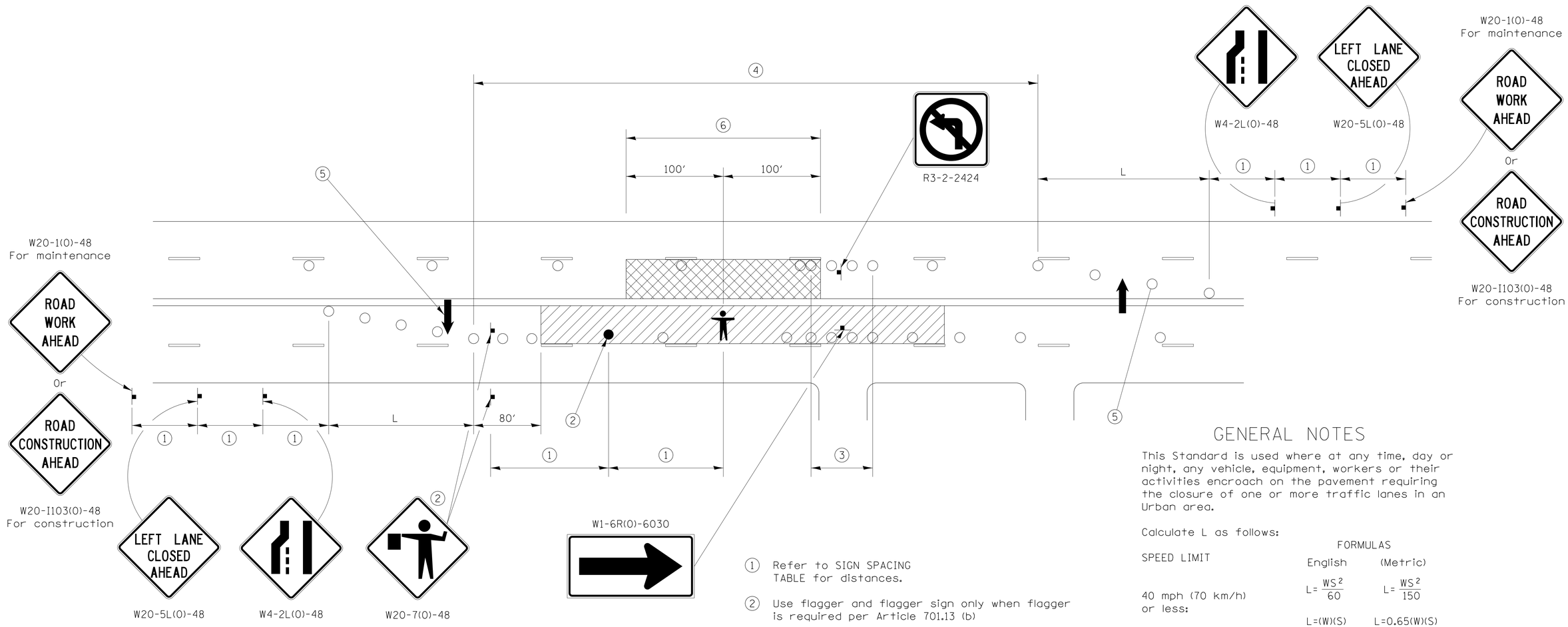

SYMBOLS

- WORK AREA
- CLOSED LANE
- ARROW BOARD
- SIGN ON PORTABLE OR PERMANENT SUPPORT
- CONE, DRUM OR BARRICADE
- FLAGGER WITH TRAFFIC CONTROL SIGN.
- WORKER ON FOOT

SIGN SPACING	
Posted Speed	Sign Spacing
55	500′ (150 m)
50-45	350′ (100 m)
<45	200′ (60 m)

1. Refer to SIGN SPACING TABLE for distances.
2. Use flagger and flagger sign only when flagger is required per Article 701.13 (b)
3. Devices at 10′ centers from edge of radius return to edge of radius return when left turns are prohibited due to actively working in the intersection
4. Cones at 20′ (6 m) centers for 250′ (75 m). Additional cones may be placed at 40′ (12 m) centers. When drums or Type I or Type II barricades are used, the interval between devices may be doubled (excluding devices in intersections).
5. Cones, drums or barricades at 20′ (6 m) centers in taper.
6. No equipment, materials, vehicles, or other hazards are allowed in the closed lane in the opposite direction within 100′ of a worker on foot.

GENERAL NOTES

This Standard is used where at any time, day or night, any vehicle, equipment, workers or their activities encroach on the pavement requiring the closure of one or more traffic lanes in an Urban area.

Calculate L as follows:

SPEED LIMIT	FORMULAS English	FORMULAS (Metric)
40 mph (70 km/h) or less:	$L = \frac{WS^2}{60}$	$L = \frac{WS^2}{150}$
45 mph (80 km/h) or greater:	$L = (W)(S)$	$L = 0.65(W)(S)$

W = Width of offset in feet (meters).

S = Normal posted speed mph (km/h).

All dimensions are in inches (millimeters) unless otherwise shown.

Lane closures in the opposite direction shall be removed when no workers are present.

Cones or reflectorized cones shall not be used during hours of darkness.

This Traffic Control detail shall be included in the cost of Traffic Control and Protection Standard 701606.

FILE NAME = District 2 Standard	USER NAME = IDOT/District 2	DESIGNED -	REVISED - 7-22-14	STATE OF ILLINOIS DEPARTMENT OF TRANSPORTATION	REGION 2 / DISTRICT 2 STANDARD	F.A. RTE.	SECTION	COUNTY	TOTAL SHEETS / SHEET NO.
		DRAWN -	REVISED -						
	PLOT SCALE = 1.0000 ′ / in.	CHECKED -	REVISED -					CONTRACT NO.	
	PLOT DATE = Thu Nov 13 11:29:02 2014	DATE -	REVISED -		SCALE: SHEET NO. OF SHEETS STA. TO STA.	FED. ROAD DIST. NO.	ILLINOIS	FED. AID PROJECT	

TEMPORARY ROAD CLOSURE EXPRESSWAY

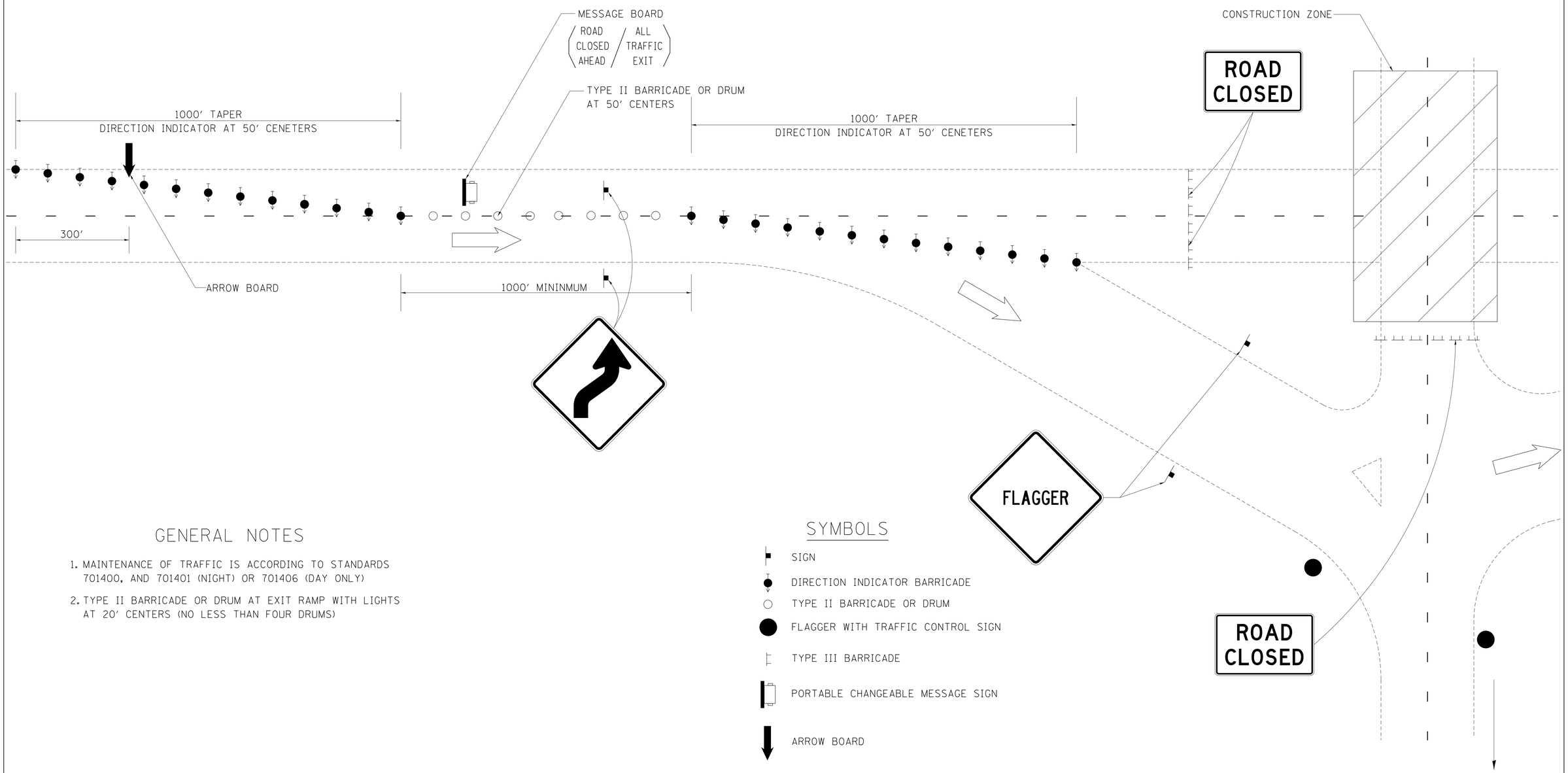

GENERAL NOTES

1. MAINTENANCE OF TRAFFIC IS ACCORDING TO STANDARDS 701400, AND 701401 (NIGHT) OR 701406 (DAY ONLY)
2. TYPE II BARRICADE OR DRUM AT EXIT RAMP WITH LIGHTS AT 20' CENTERS (NO LESS THAN FOUR DRUMS)

SYMBOLS

- SIGN
- DIRECTION INDICATOR BARRICADE
- TYPE II BARRICADE OR DRUM
- FLAGGER WITH TRAFFIC CONTROL SIGN
- TYPE III BARRICADE
- PORTABLE CHANGEABLE MESSAGE SIGN
- ARROW BOARD

SIGNING ACCORDING TO SPECIFIED STANDARDS

FILE NAME = District 2 Standard	USER NAME = IDOT/District 2	DESIGNED -	REVISED - 8-27-13	STATE OF ILLINOIS DEPARTMENT OF TRANSPORTATION	REGION 2 / DISTRICT 2 STANDARD			F.A. RTE.	SECTION	COUNTY / TOTAL SHEETS / SHEET NO.
		DRAWN -	REVISED - 4-04-11							
	PLOT SCALE = 1.0000 '/ in.	CHECKED -	REVISED -							CONTRACT NO.
	PLOT DATE = Thu Nov 13 11:29:02 2014	DATE -	REVISED -		SCALE:	SHEET NO. OF SHEETS	STA. TO STA.	FED. ROAD DIST. NO.	ILLINOIS	FED. AID PROJECT

TRAFFIC CONTROL FOR THREE LANE SECTION

CASE 1

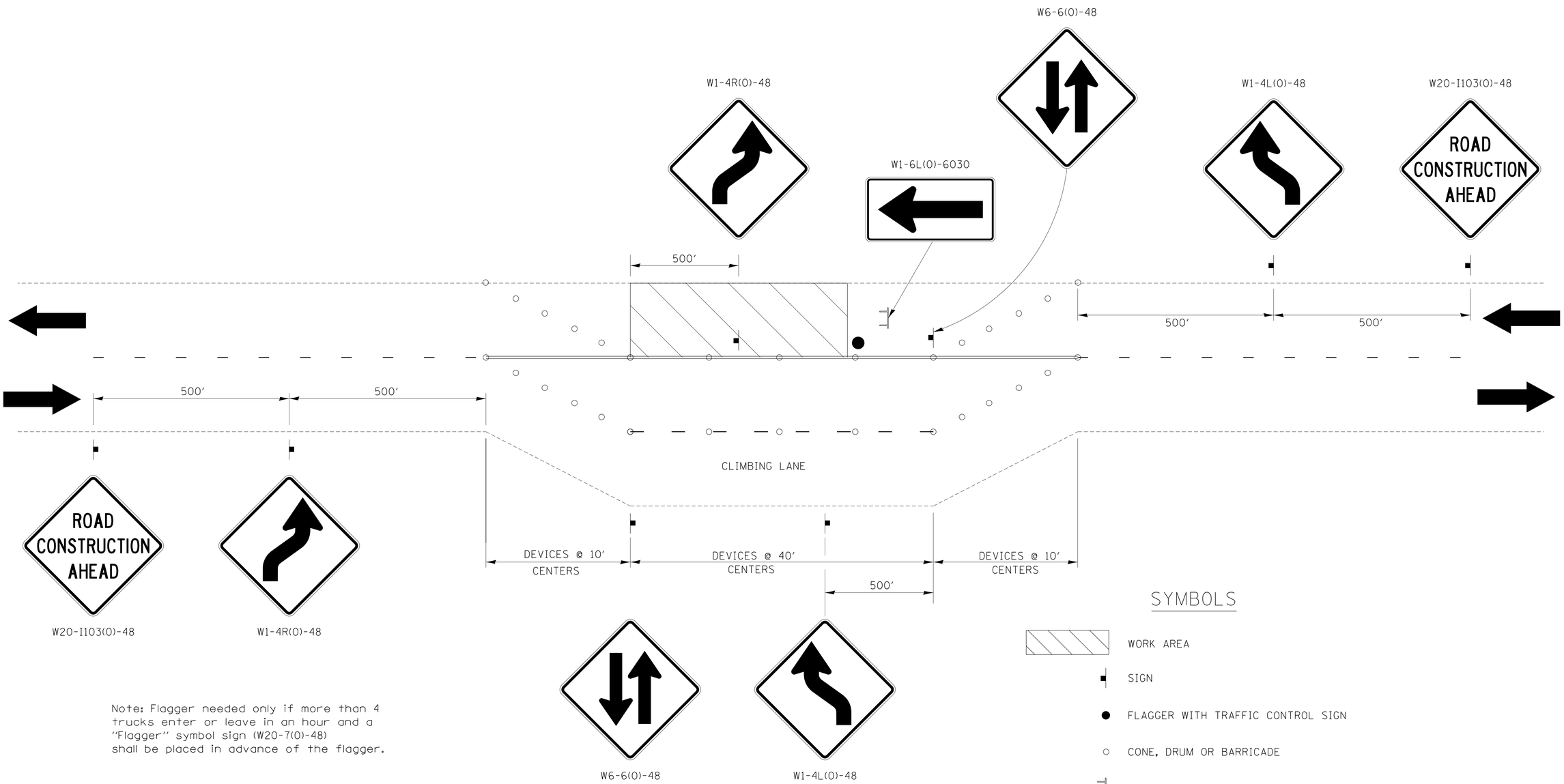

Note: Flagger needed only if more than 4 trucks enter or leave in an hour and a "Flagger" symbol sign (W20-7(O)-48) shall be placed in advance of the flagger.

SYMBOLS

- WORK AREA
- SIGN
- FLAGGER WITH TRAFFIC CONTROL SIGN
- CONE, DRUM OR BARRICADE
- TYPE III BARRICADE

THIS TRAFFIC CONTROL DETAIL SHALL BE INCLUDED IN THE COST OF SPECIFIED TRAFFIC CONTROL STANDARDS OR ITEMS.

FILE NAME = District 2 Standard	USER NAME = IDOT/District 2	DESIGNED -	REVISED - 8-27-13	STATE OF ILLINOIS DEPARTMENT OF TRANSPORTATION	REGION 2 / DISTRICT 2 STANDARD	F.A. RTE.	SECTION	COUNTY	TOTAL SHEETS / SHEET NO.
		DRAWN -	REVISED - 7-30-13						
	PLOT SCALE = 1.0000 ' / in.	CHECKED -	REVISED -					CONTRACT NO.	
	PLOT DATE = Thu Nov 13 11:29:03 2014	DATE -	REVISED -		SCALE: SHEET NO. OF SHEETS STA. TO STA.	FED. ROAD DIST. NO.	ILLINOIS	FED. AID PROJECT	

TRAFFIC CONTROL FOR THREE LANE SECTION

CASE 2

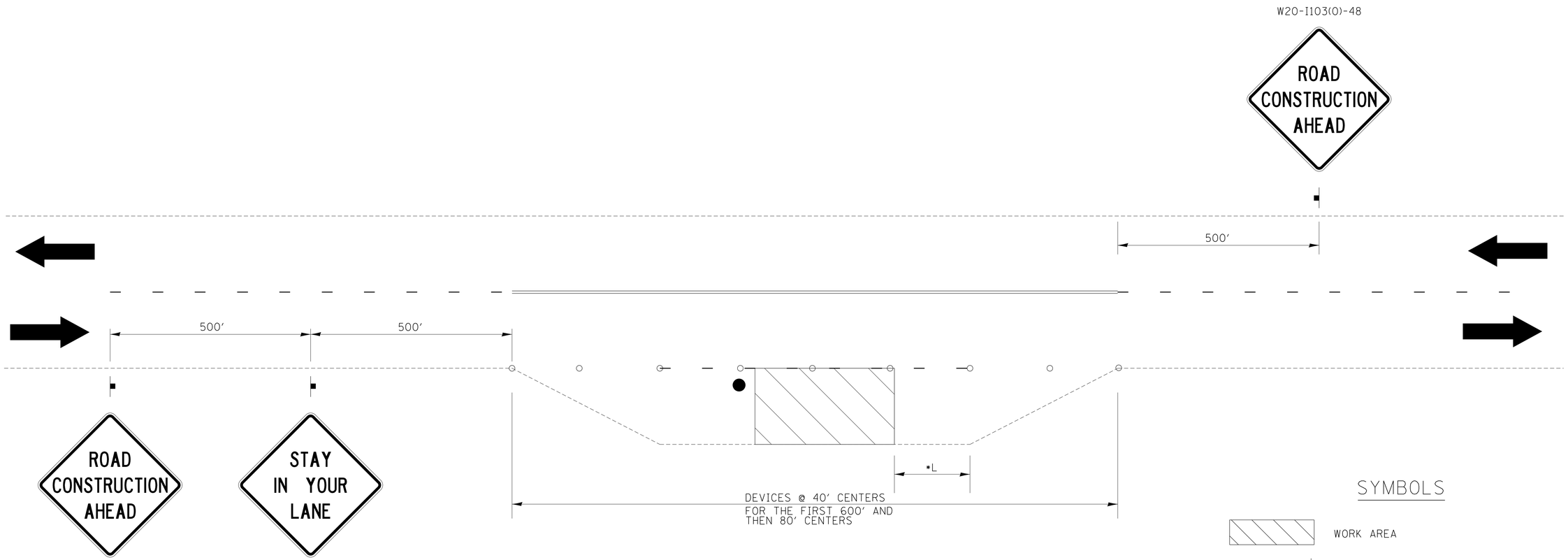

Note: Flagger needed only if more than 4 trucks enter or leave in an hour and a "Flagger" symbol sign (W20-7(0)-48) shall be placed in advance of the flagger.

SYMBOLS

- WORK AREA
- SIGN
- FLAGGER WITH TRAFFIC CONTROL SIGN
- CONE, DRUM OR BARRICADE

THIS TRAFFIC CONTROL DETAIL SHALL BE INCLUDED IN THE COST OF SPECIFIED TRAFFIC CONTROL STANDARDS OR ITEMS.

*IF THE WORK ENDS WITHIN 2500 FEET OF THE TRANSITION WHEN THE SPEED IS > 40 MPH OR 1500 FEET FOR ALL OTHER SPEEDS, THE CLIMBING LANE SHALL REMAIN CLOSED AS SHOWN.

FILE NAME = District 2 Standard	USER NAME = IDOT/District 2	DESIGNED -	REVISED - 8-27-13	STATE OF ILLINOIS DEPARTMENT OF TRANSPORTATION	REGION 2 / DISTRICT 2 STANDARD		F.A. RTE.	SECTION	COUNTY	TOTAL SHEETS / SHEET NO.
		DRAWN -	REVISED - 7-30-13							
	PLOT SCALE = 1.0000 ′ / in.	CHECKED -	REVISED -						CONTRACT NO.	
	PLOT DATE = Thu Nov 13 11:29:04 2014	DATE -	REVISED -		SCALE:	SHEET NO. OF SHEETS	STA. TO STA.	FED. ROAD DIST. NO.	ILLINOIS	FED. AID PROJECT

TRAFFIC CONTROL FOR THREE LANE SECTION

CASE 3

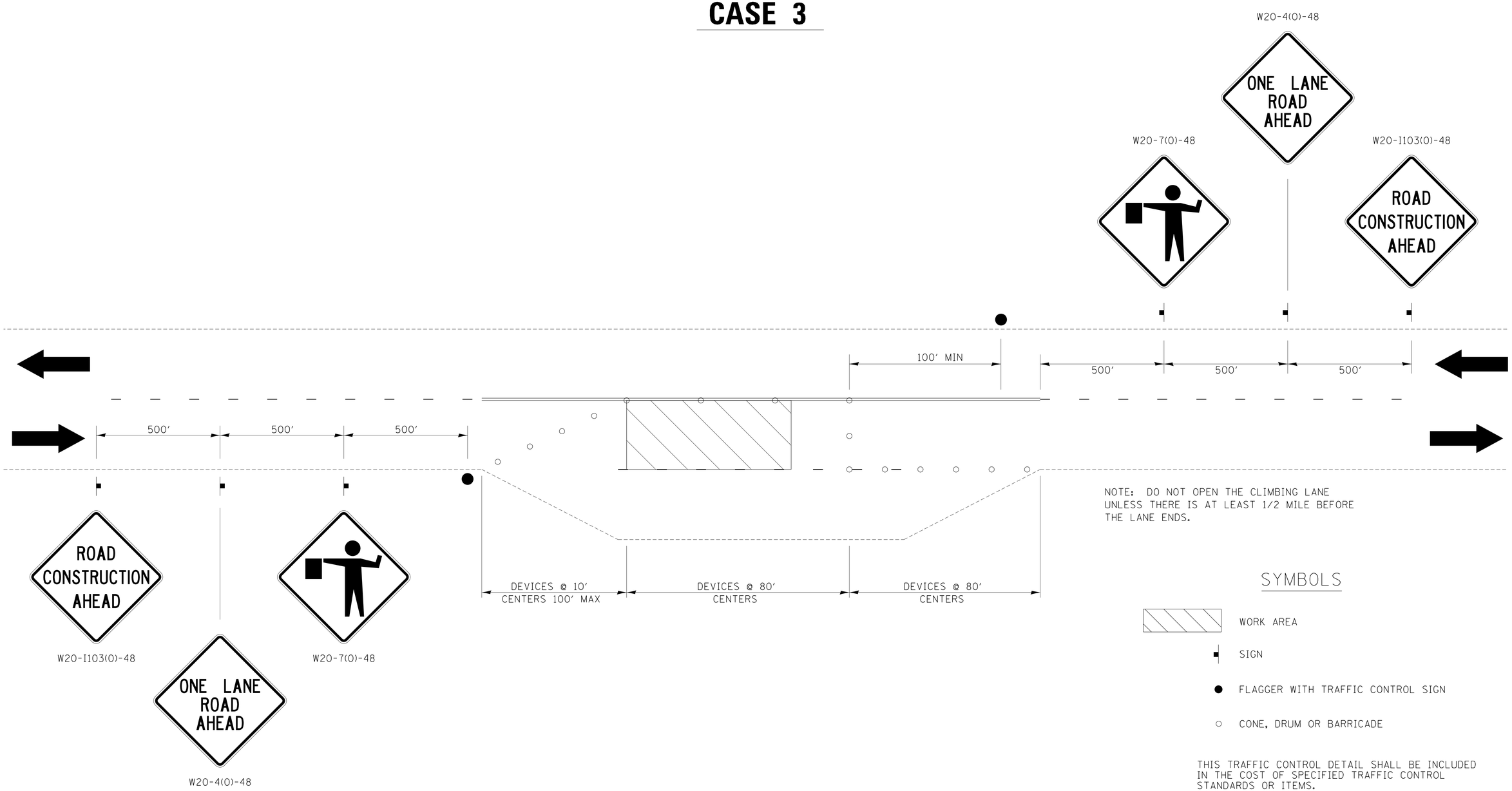

NOTE: DO NOT OPEN THE CLIMBING LANE UNLESS THERE IS AT LEAST 1/2 MILE BEFORE THE LANE ENDS.

SYMBOLS

- WORK AREA
- SIGN
- FLAGGER WITH TRAFFIC CONTROL SIGN
- CONE, DRUM OR BARRICADE

THIS TRAFFIC CONTROL DETAIL SHALL BE INCLUDED IN THE COST OF SPECIFIED TRAFFIC CONTROL STANDARDS OR ITEMS.

FILE NAME = District 2 Standard	USER NAME = IDOT/District 2	DESIGNED -	REVISED - 8-27-13	STATE OF ILLINOIS DEPARTMENT OF TRANSPORTATION	REGION 2 / DISTRICT 2 STANDARD	F.A. RTE.	SECTION	COUNTY	TOTAL SHEETS / SHEET NO.
		DRAWN -	REVISED - 7-30-13						
	PLOT SCALE = 1.0000 ′ / in.	CHECKED -	REVISED -					CONTRACT NO.	
	PLOT DATE = Thu Nov 13 11:29:04 2014	DATE -	REVISED -		SCALE: SHEET NO. OF SHEETS STA. TO STA.	FED. ROAD DIST. NO.	ILLINOIS	FED. AID PROJECT	

TRAFFIC CONTROL FOR THREE LANE SECTION

CASE 4

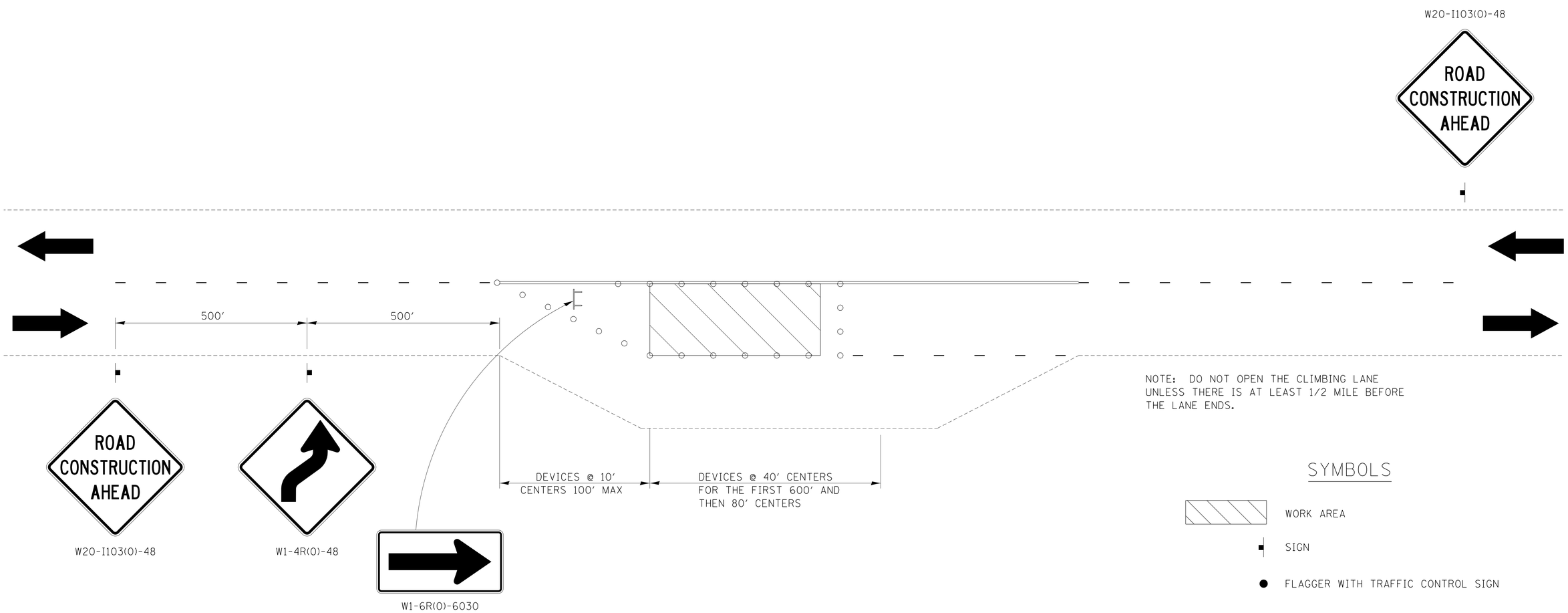

NOTE: DO NOT OPEN THE CLIMBING LANE UNLESS THERE IS AT LEAST 1/2 MILE BEFORE THE LANE ENDS.

SYMBOLS

- WORK AREA
- SIGN
- FLAGGER WITH TRAFFIC CONTROL SIGN
- CONE, DRUM OR BARRICADE
- TYPE III BARRICADE

THIS TRAFFIC CONTROL DETAIL SHALL BE INCLUDED IN THE COST OF SPECIFIED TRAFFIC CONTROL STANDARDS OR ITEMS.

CASE 4 APPLIES WHEN NO WORKERS ARE PRESENT. WHEN WORKERS ARE PRESENT, TWO LANES SHALL BE CLOSED AND TRAFFIC CONTROL SHALL BE ACCORDING TO CASE 3.

FILE NAME = District 2 Standard	USER NAME = IDOT/District 2	DESIGNED -	REVISED - 8-27-13	STATE OF ILLINOIS DEPARTMENT OF TRANSPORTATION	REGION 2 / DISTRICT 2 STANDARD		F.A. RTE.	SECTION	COUNTY	TOTAL SHEETS / SHEET NO.
		DRAWN -	REVISED - 7-30-13							
	PLOT SCALE = 1.0000 ' / in.	CHECKED -	REVISED -						CONTRACT NO.	
	PLOT DATE = Thu Nov 13 11:29:05 2014	DATE -	REVISED -		SCALE:	SHEET NO. OF SHEETS	STA. TO STA.	FED. ROAD DIST. NO.	ILLINOIS	FED. AID PROJECT

TRAFFIC CONTROL FOR TRANSITION AREAS

CASE 1

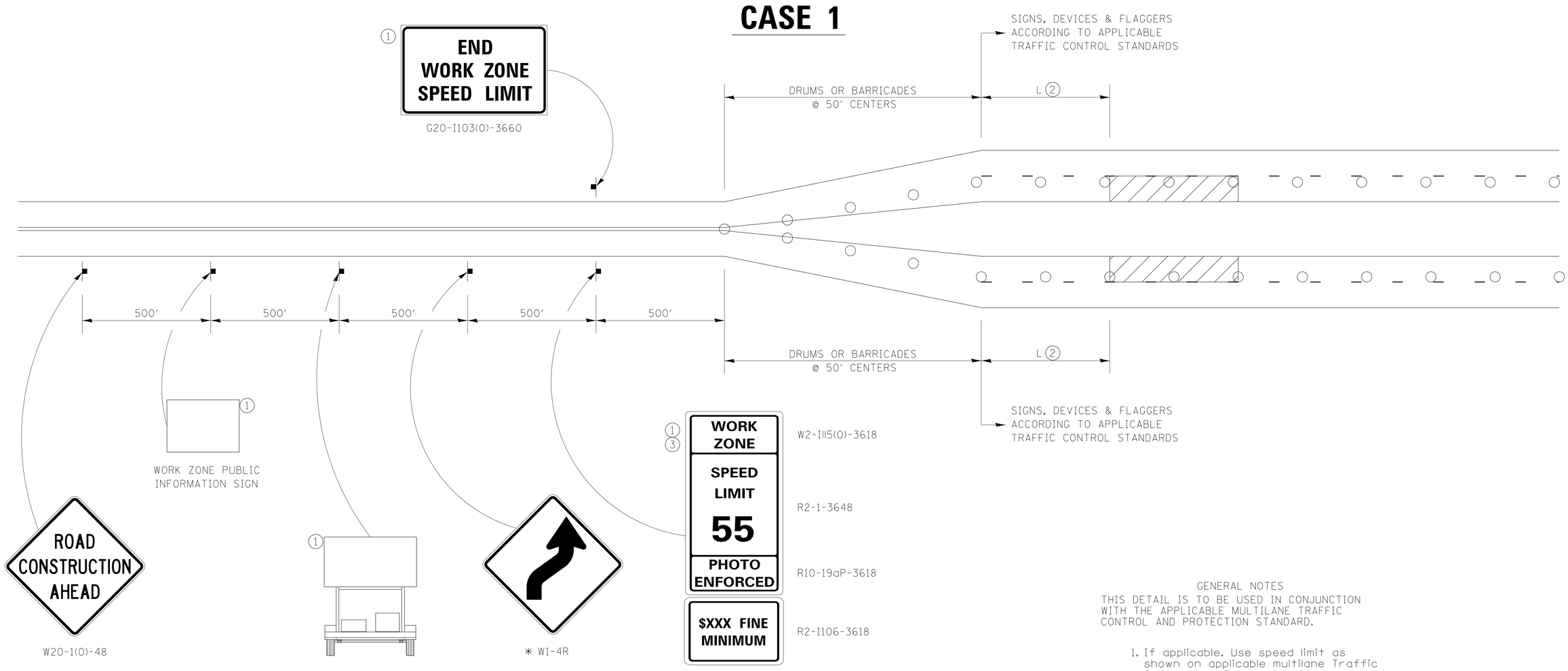

GENERAL NOTES

THIS DETAIL IS TO BE USED IN CONJUNCTION WITH THE APPLICABLE MULTILANE TRAFFIC CONTROL AND PROTECTION STANDARD.

1. If applicable. Use speed limit as shown on applicable multilane Traffic Control and Protection Standard.
2. If the work is within 2500 feet of the transition when the speed is > 40 mph, or 1500 feet for all other speeds, the detail shall be used.
3. WORK ZONE SPEED LIMIT 55 BEGINS shall be replaced with WORK ZONE SPEED LIMIT 45 BEGINS where the workers are within 500 feet of the transition.

THIS TRAFFIC CONTROL DETAIL SHALL BE INCLUDED IN THE COST OF SPECIFIED TRAFFIC CONTROL STANDARDS OR ITEMS.

DRUMS OR BARRICADES

WORK AREA

NOTE: STANDARDS 701301 AND 701306 SHALL NOT BE USED WITHIN 500 FEET OF THE TRANSITION.

* DEPENDS ON GEOMETRICS OF THE TRANSITION. MAY SWITCH THE "STAY IN YOUR LANE" AND "WEAVE SIGNS"

FILE NAME = District 2 Standard	USER NAME = IDOT/District 2	DESIGNED -	REVISED - 8-27-13	STATE OF ILLINOIS DEPARTMENT OF TRANSPORTATION	REGION 2 / DISTRICT 2 STANDARD		F.A. RTE.	SECTION	COUNTY	TOTAL SHEETS / SHEET NO.
		DRAWN -	REVISED - 1-16-13							
	PLOT SCALE = 1.0000 '/ in.	CHECKED -	REVISED -						CONTRACT NO.	
	PLOT DATE = Thu Nov 13 11:29:05 2014	DATE -	REVISED -		SCALE:	SHEET NO. OF SHEETS	STA. TO STA.	FED. ROAD DIST. NO.	ILLINOIS	FED. AID PROJECT

TRAFFIC CONTROL FOR TRANSITION AREAS

CASE 2

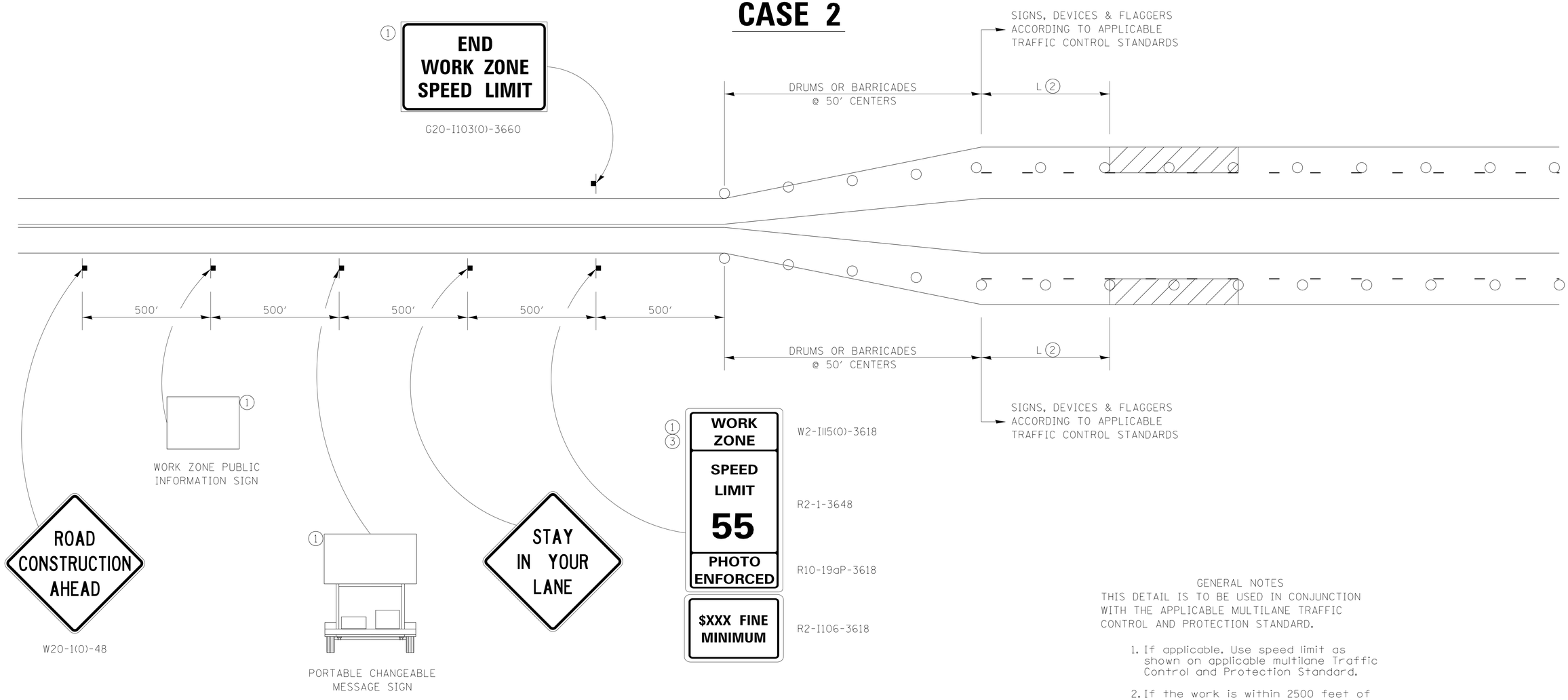

DRUMS OR BARRICADES

WORK AREA

NOTE: STANDARDS 701301 AND 701306 SHALL NOT BE USED WITHIN 500 FEET OF THE TRANSITION.

GENERAL NOTES

THIS DETAIL IS TO BE USED IN CONJUNCTION WITH THE APPLICABLE MULTILANE TRAFFIC CONTROL AND PROTECTION STANDARD.

1. If applicable. Use speed limit as shown on applicable multilane Traffic Control and Protection Standard.
2. If the work is within 2500 feet of the transition when the speed is > 40 mph, or 1500 feet for all other speeds, the detail shall be used.
3. WORK ZONE SPEED LIMIT 55 BEGINS shall be replaced with WORK ZONE SPEED LIMIT 45 BEGINS where the workers are within 500 feet of the transition.

THIS TRAFFIC CONTROL DETAIL SHALL BE INCLUDED IN THE COST OF SPECIFIED TRAFFIC CONTROL STANDARDS OR ITEMS.

FILE NAME = District 2 Standard	USER NAME = IDOT/District 2	DESIGNED -	REVISED - 8-27-13	STATE OF ILLINOIS DEPARTMENT OF TRANSPORTATION	REGION 2 / DISTRICT 2 STANDARD			F.A. RTE.	SECTION	COUNTY	TOTAL SHEETS	SHEET NO.
		DRAWN -	REVISED - 1-16-13									
	PLOT SCALE = 1.0000 '/ in.	CHECKED -	REVISED -							CONTRACT NO.		
	PLOT DATE = Thu Nov 13 11:29:06 2014	DATE -	REVISED -		SCALE:	SHEET NO. OF SHEETS	STA. TO STA.	FED. ROAD DIST. NO.	ILLINOIS	FED. AID PROJECT		

TRAFFIC CONTROL FOR TRANSITION AREAS

CASE 3

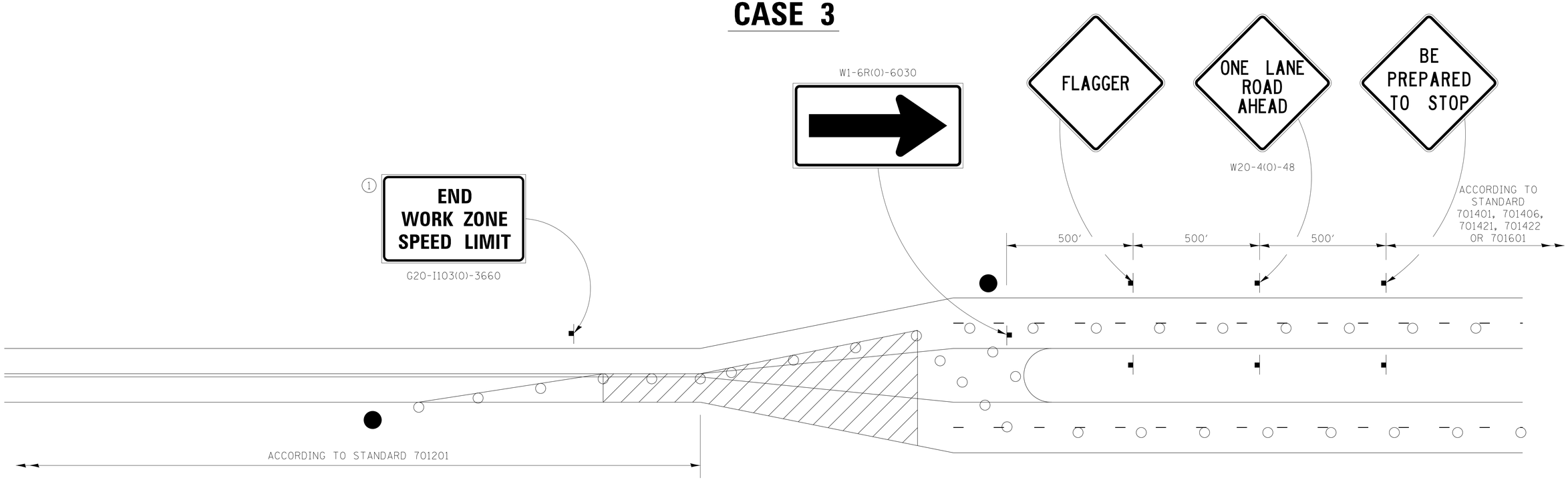

FLAGGER WITH TRAFFIC CONTROL SIGN

DRUMS OR BARRICADES

WORK AREA

NOTE: STANDARDS 701301 AND 701306 SHALL NOT BE USED WITHIN 500 FEET OF THE TRANSITION.

GENERAL NOTES

THIS DETAIL IS TO BE USED IN CONJUNCTION WITH THE APPLICABLE MULTILANE TRAFFIC CONTROL AND PROTECTION STANDARD.

1. If applicable. Use speed limit as shown on applicable multilane Traffic Control and Protection Standard.
2. If the work is within 2500 feet of the transition when the speed is > 40 mph, or 1500 feet for all other speeds, the detail shall be used.
3. WORK ZONE SPEED LIMIT 55 BEGINS shall be replaced with WORK ZONE SPEED LIMIT 45 BEGINS where the workers are within 500 feet of the transition.

THIS TRAFFIC CONTROL DETAIL SHALL BE INCLUDED IN THE COST OF SPECIFIED TRAFFIC CONTROL STANDARDS OR ITEMS.

FILE NAME = District 2 Standard	USER NAME = IDOT/District 2	DESIGNED -	REVISED - 8-27-13	STATE OF ILLINOIS DEPARTMENT OF TRANSPORTATION	REGION 2 / DISTRICT 2 STANDARD	F.A. RTE.	SECTION	COUNTY	TOTAL SHEETS / SHEET NO.
		DRAWN -	REVISED - 3-05-12						
	PLOT SCALE = 1.0000 ' / in.	CHECKED -	REVISED -					CONTRACT NO.	
	PLOT DATE = Thu Nov 13 11:29:06 2014	DATE -	REVISED -		SCALE: SHEET NO. OF SHEETS STA. TO STA.	FED. ROAD DIST. NO.	ILLINOIS	FED. AID PROJECT	

TRAFFIC CONTROL FOR TRANSITION AREAS

CASE 4

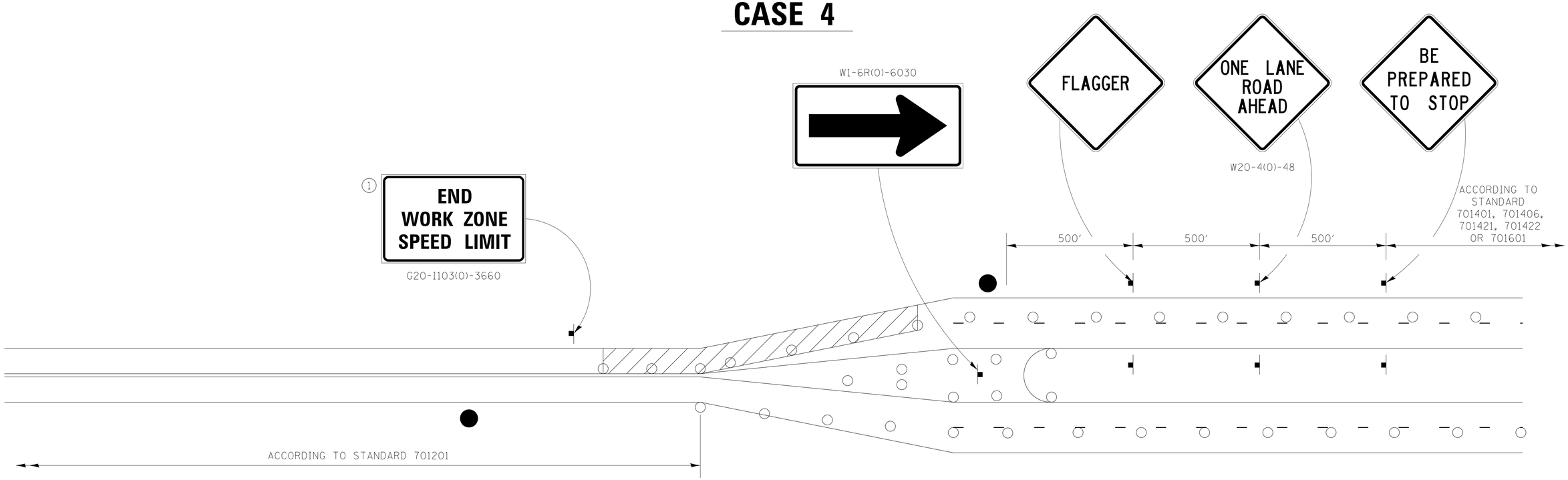

FLAGGER WITH TRAFFIC CONTROL SIGN

DRUMS OR BARRICADES

WORK AREA

NOTE: STANDARDS 701301 AND 701306 SHALL NOT BE USED WITHIN 500 FEET OF THE TRANSITION.

GENERAL NOTES

THIS DETAIL IS TO BE USED IN CONJUNCTION WITH THE APPLICABLE MULTILANE TRAFFIC CONTROL AND PROTECTION STANDARD.

1. If applicable. Use speed limit as shown on applicable multilane Traffic Control and Protection Standard.
2. If the work is within 2500 feet of the transition when the speed is > 40 mph, or 1500 feet for all other speeds, the detail shall be used.
3. WORK ZONE SPEED LIMIT 55 BEGINS shall be replaced with WORK ZONE SPEED LIMIT 45 BEGINS where the workers are within 500 feet of the transition.

THIS TRAFFIC CONTROL DETAIL SHALL BE INCLUDED IN THE COST OF SPECIFIED TRAFFIC CONTROL STANDARDS OR ITEMS.

FILE NAME = District 2 Standard	USER NAME = IDOT/District 2	DESIGNED -	REVISED - 8-27-13	STATE OF ILLINOIS DEPARTMENT OF TRANSPORTATION	REGION 2 / DISTRICT 2 STANDARD	F.A. RTE.	SECTION	COUNTY	TOTAL SHEETS / SHEET NO.
		DRAWN -	REVISED - 3-05-12						
	PLOT SCALE = 1.0000 ' / in.	CHECKED -	REVISED -					CONTRACT NO.	
	PLOT DATE = Thu Nov 13 11:29:07 2014	DATE -	REVISED -		SCALE: SHEET NO. OF SHEETS STA. TO STA.	FED. ROAD DIST. NO.	ILLINOIS	FED. AID PROJECT	

TRAFFIC CONTROL TYPICAL WEAVE

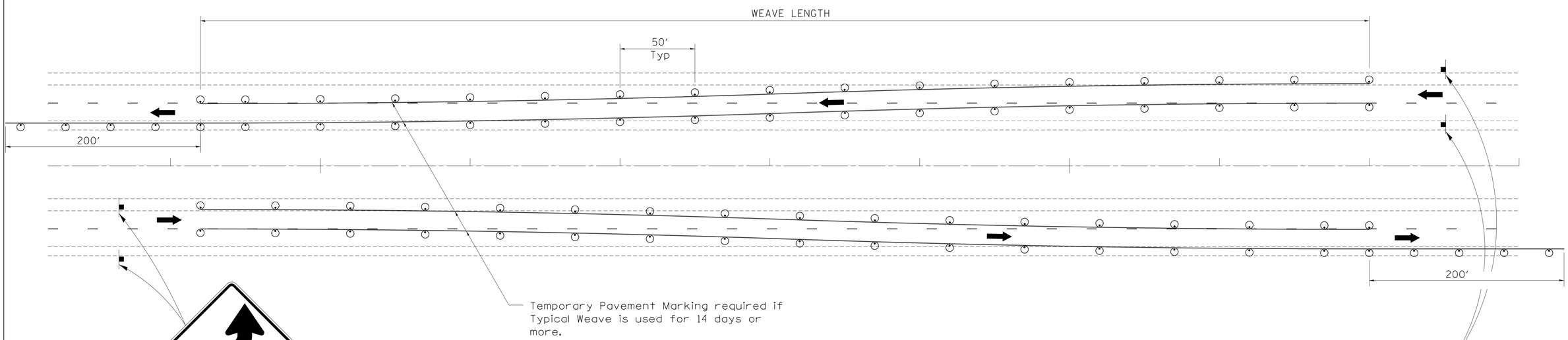

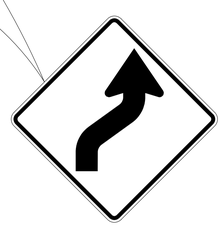

W1-4R(O)-48

W13-1(O)-2424

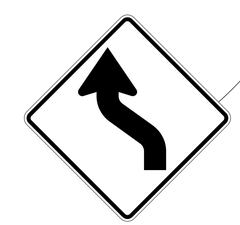

W1-4L(O)-48

W13-1(O)-2424

SYMBOLS

DRUM WITH STEADY BURN MONO-DIRECTIONAL LIGHTS

SIGN ON PERMANENT MOUNT

DESIGNER NOTE:

1. USE ON LONG 4-LANE PROJECTS WHERE THE CONTRACTOR MAY CHANGE A PORTION OF THE WORK TO THE OPPOSITE LANE.
2. USE WHERE THE PROJECT IS ADJACENT TO ANOTHER AND THE CONTRACTOR COULD BE WORKING ON DIFFERENT LANES.
3. TEMPORARY PAVEMENT MARKING SHALL BE USED WHEN TYPICAL WEAVE IS USED FOR 14 DAYS OR MORE.
4. TRAFFIC CONTROL TYPICAL WEAVE SHALL BE INCLUDED IN THE COST OF THE SPECIFIC TRAFFIC CONTROL STANDARDS OF ITEMS.

STANDARD WEAVE CONDITIONS FOR DIFFERENT SPEED LIMITS

POSTED SPEED LIMIT	ADVISORY SPEED LIMIT	WEAVE LENGTH
65 MPH OR GREATER	45 MPH	780 FT.
55 MPH	35 MPH	660 FT.
45 MPH	25 MPH	540 FT.

ALL DIMENSIONS ARE IN INCHES UNLESS OTHERWISE NOTED.

FILE NAME = District 2 Standard	USER NAME = IDOT/District 2	DESIGNED -	REVISED - 6-27-14	STATE OF ILLINOIS DEPARTMENT OF TRANSPORTATION	REGION 2 / DISTRICT 2 STANDARD			F.A. RTE.	SECTION	COUNTY	TOTAL SHEETS / SHEET NO.
		DRAWN -	REVISED - 8-27-13								
	PLOT SCALE = 1.0000 ′ / in.	CHECKED -	REVISED - 10-17-11							CONTRACT NO.	
	PLOT DATE = Thu Nov 13 11:29:08 2014	DATE -	REVISED -		SCALE:	SHEET NO. OF SHEETS	STA. TO STA.	FED. ROAD DIST. NO.	ILLINOIS	FED. AID PROJECT	

TRAFFIC CONTROL FOR ROAD CLOSURE

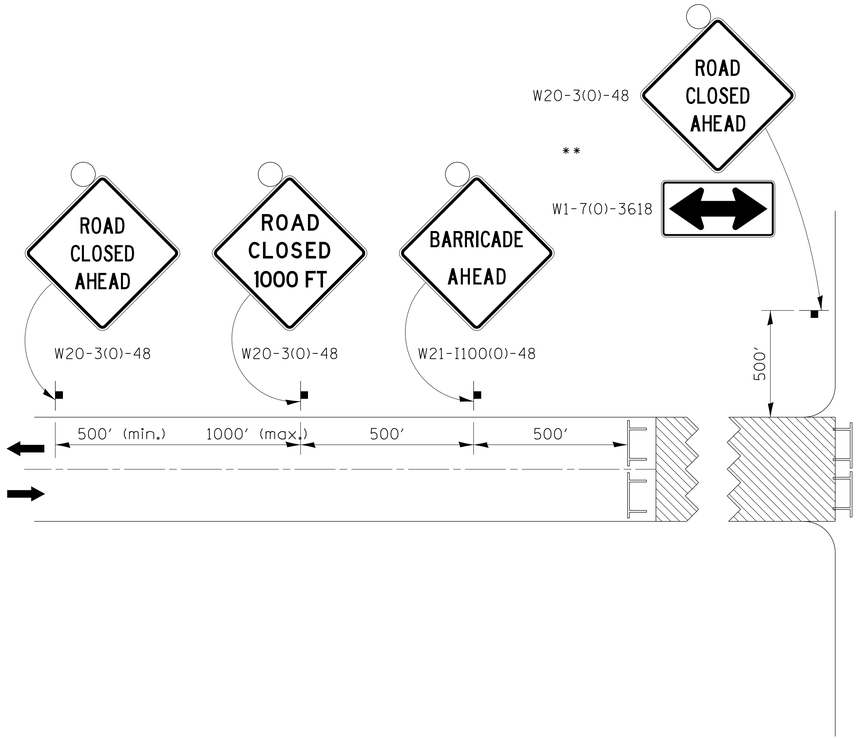

ROAD CLOSED TO THRU TRAFFIC BARRICADE SET UP

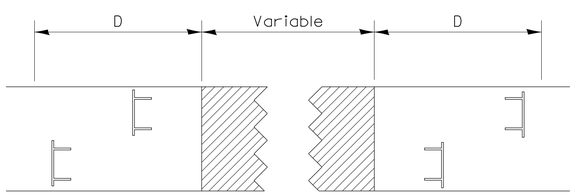

Type III Barricades and R11-4-4830 signs shall be as shown in "Road Closed To Thru Traffic" detail on Highway Standard 701901. If the distance "D" exceeds 2000′ an additional set of barricades and R11-4-4830 shall be placed at each end of the work area.

CONDITION II

Minor Sideroad Closure

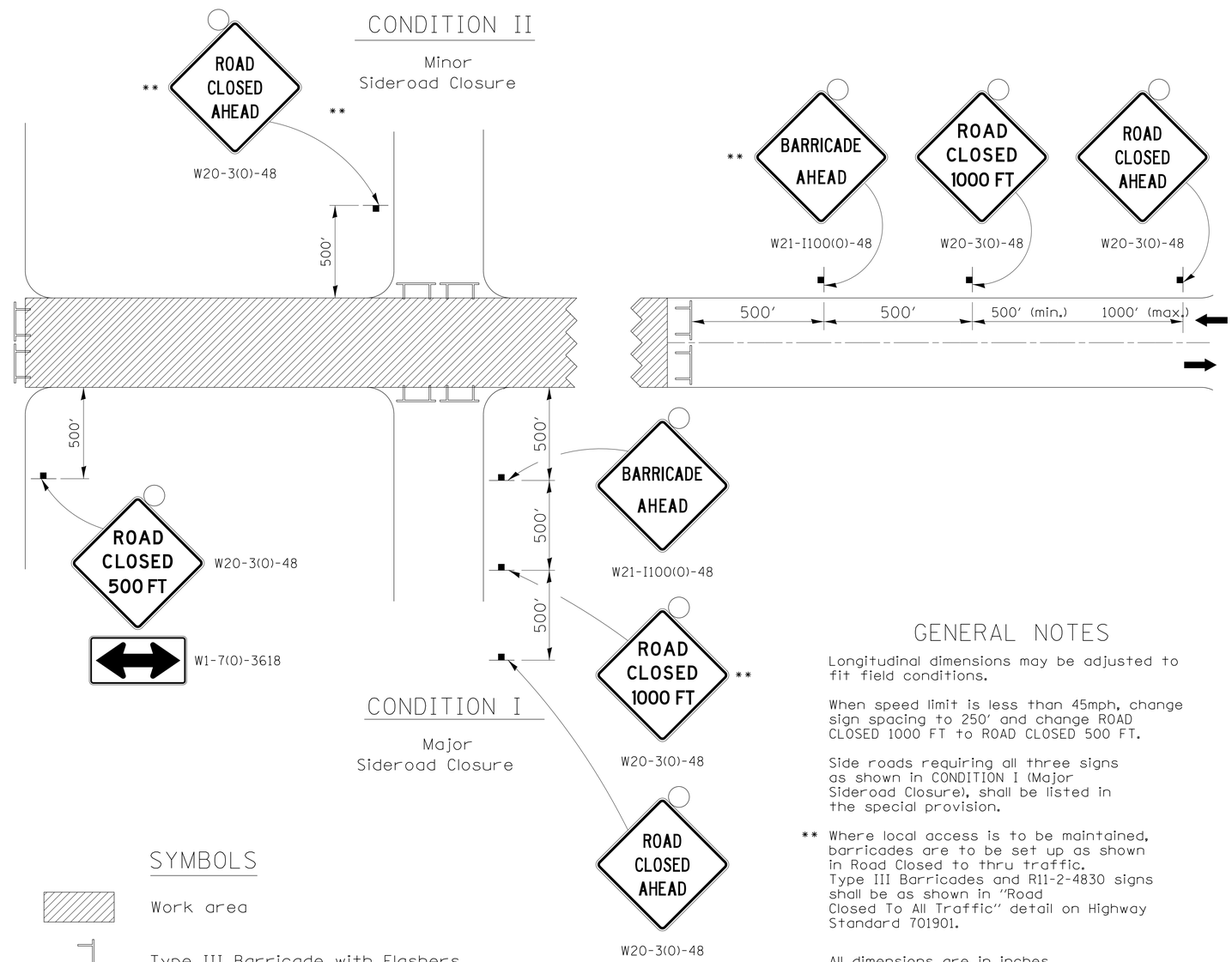

CONDITION I

Major Sideroad Closure

SYMBOLS

Work area

Type III Barricade with Flashers

Sign with flashing light

GENERAL NOTES

Longitudinal dimensions may be adjusted to fit field conditions.

When speed limit is less than 45mph, change sign spacing to 250′ and change ROAD CLOSED 1000 FT to ROAD CLOSED 500 FT.

Side roads requiring all three signs as shown in CONDITION I (Major Sideroad Closure), shall be listed in the special provision.

** Where local access is to be maintained, barricades are to be set up as shown in Road Closed to thru traffic. Type III Barricades and R11-2-4830 signs shall be as shown in "Road Closed To All Traffic" detail on Highway Standard 701901.

All dimensions are in inches unless otherwise shown.

TYPICAL APPLICATION FOR ROAD CLOSURE

FILE NAME = District 2 Standard	USER NAME = IDOT/District 2	DESIGNED -	REVISED - 8-27-13	STATE OF ILLINOIS DEPARTMENT OF TRANSPORTATION	REGION 2 / DISTRICT 2 STANDARD	F.A. RTE.	SECTION	COUNTY	TOTAL SHEETS / SHEET NO.
		DRAWN -	REVISED - 10-17-11						
	PLOT SCALE = 1.0000 ′ / in.	CHECKED -	REVISED -					CONTRACT NO.	
	PLOT DATE = Thu Nov 13 11:29:08 2014	DATE -	REVISED -		SCALE: SHEET NO. OF SHEETS STA. TO STA.	FED. ROAD DIST. NO.	ILLINOIS	FED. AID PROJECT	

TRAFFIC CONTROL FOR ROAD CLOSURE WITH SIDE ROAD WITHIN 150′ OF CLOSURE

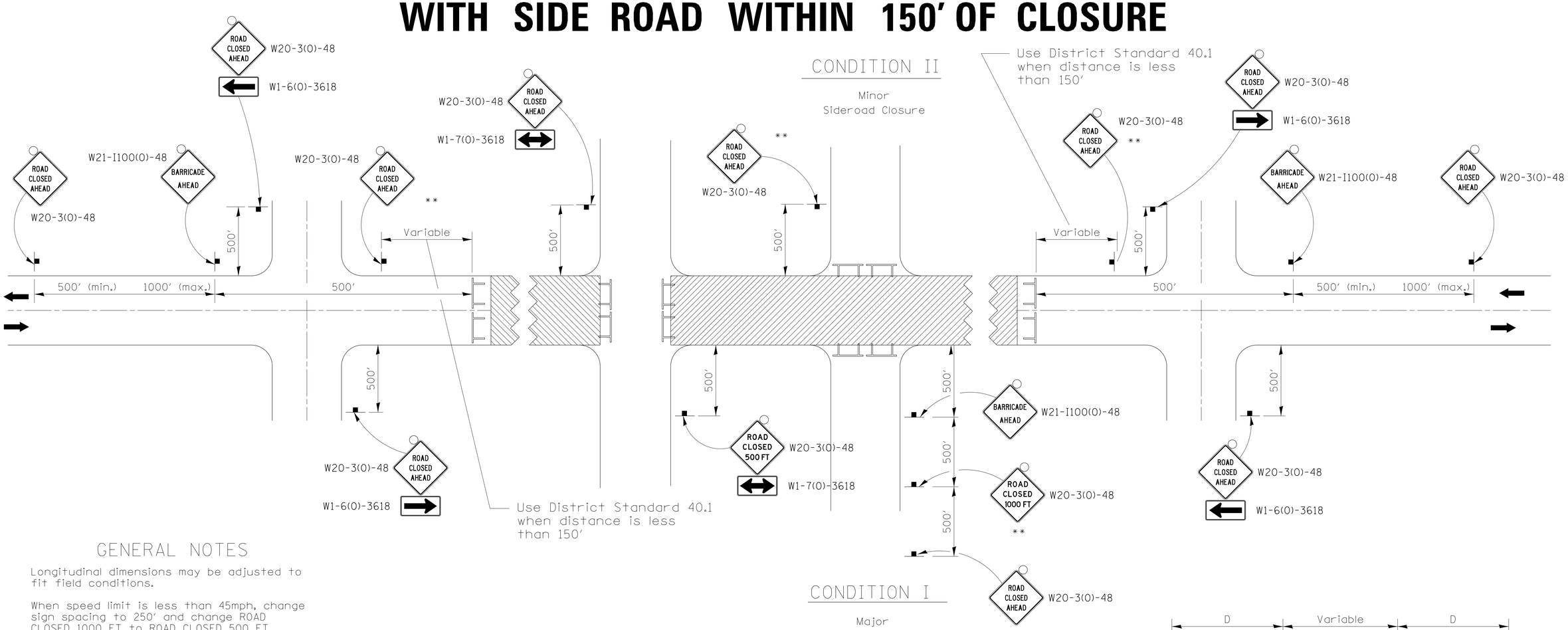

GENERAL NOTES

Longitudinal dimensions may be adjusted to fit field conditions.

When speed limit is less than 45mph, change sign spacing to 250′ and change ROAD CLOSED 1000 FT to ROAD CLOSED 500 FT.

When the distance between the barricade and the intersection is between 1500′ and 2000′, the advance sign shall be placed at the intersection. When the distance between the barricade and the intersection is over 2000′, an additional sign shall be placed at the intersection. The additional sign shall give the distance to the barricade in miles or fractions of a mile.

Side roads requiring all three signs as shown in CONDITION I (Major Sideroad Closure) , shall be listed in the special provision.

** Where local access is to be maintained, barricades are to be set up as shown above in Road Closed to thru traffic.

Type III Barricades and R11-2-4830 signs shall be as shown in "Road Closed To All Traffic" detail on Highway Standard 701901.

SYMBOLS

Work area

Type III Barricade with Flashers

Sign with flashing light

All dimensions are in inches unless otherwise shown.

Type III Barricades and R11-4-4830 signs shall be as shown in "Road Closed To Thru Traffic" detail on Highway Standard 701901. If the distance "D" exceeds 2000′ an additional set of barricades and R11-4-4830 shall be placed at each end of the work area.

TYPICAL APPLICATION FOR ROAD CLOSURE WITH SIDE ROAD WITHIN 150′ OF CLOSURE

FILE NAME = District 2 Standard	USER NAME = IDOT/District 2	DESIGNED -	REVISED - 6-27-14	STATE OF ILLINOIS DEPARTMENT OF TRANSPORTATION	REGION 2 / DISTRICT 2 STANDARD	F.A. RTE.	SECTION	COUNTY	TOTAL SHEETS / SHEET NO.
		DRAWN -	REVISED 8-27-13						
	PLOT SCALE = 1.0000 ′ / in.	CHECKED -	REVISED 10-17-11					CONTRACT NO.	
	PLOT DATE = Thu Nov 13 11:29:09 2014	DATE -	REVISED		SCALE: SHEET NO. OF SHEETS STA. TO STA.	FED. ROAD DIST. NO.	ILLINOIS	FED. AID PROJECT	

TYPICAL PAVEMENT MARKINGS

TYPICAL PAVEMENT MARKING FOR FLUSH MEDIAN AT LEFT TURN LANE

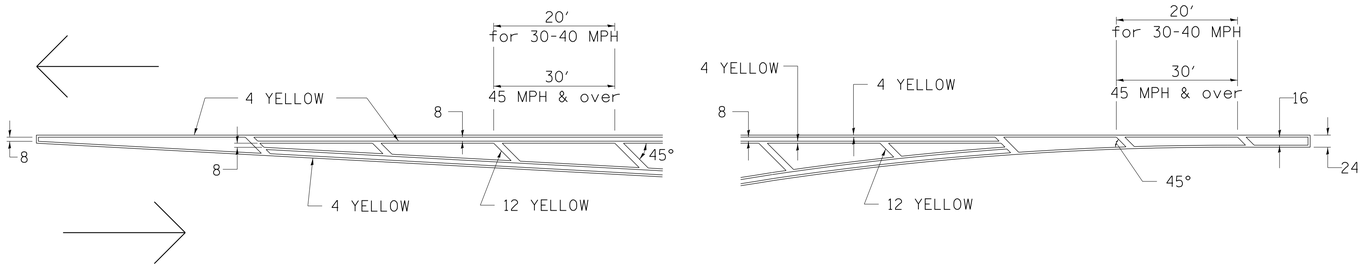

MEDIAN PAVEMENT MARKING

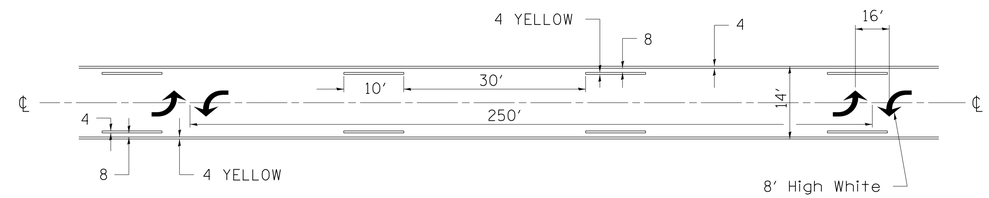

** ALL DIMENSIONS ARE IN INCHES UNLESS OTHERWISE NOTED.

TYPICAL ISLAND OFFSET SHOULDER WIDTH

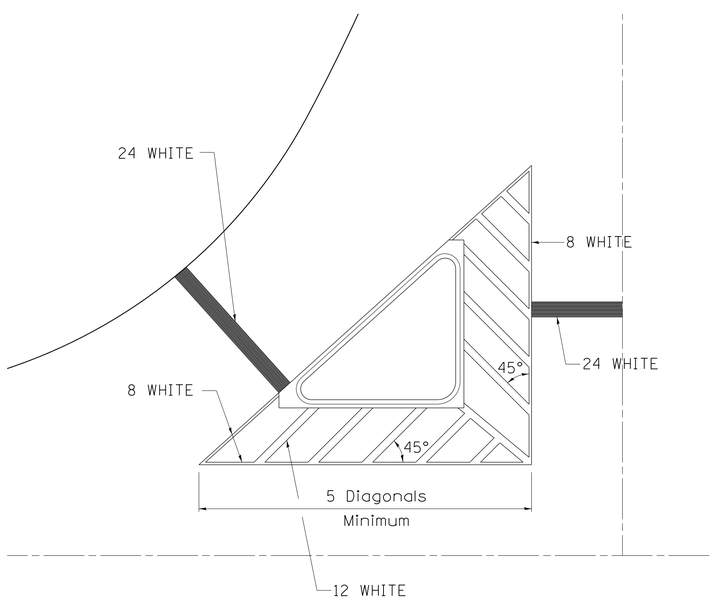

TYPICAL MARKING FOR PAINTED ISLANDS

NOTE:
* 45° TO LOCAL TAN.

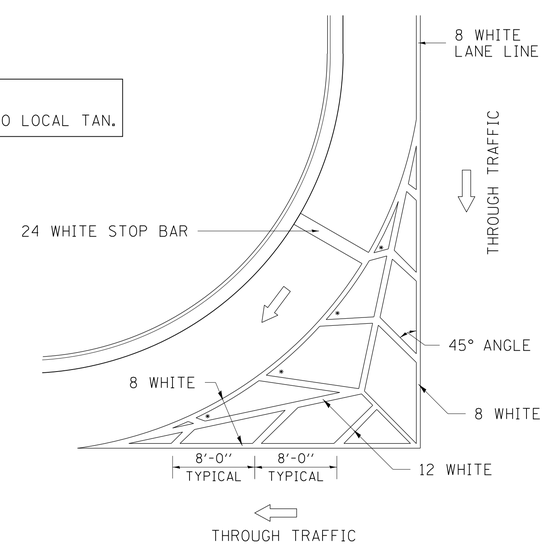

STANDARD CROSSWALK MARKING

See Schedules for Locations

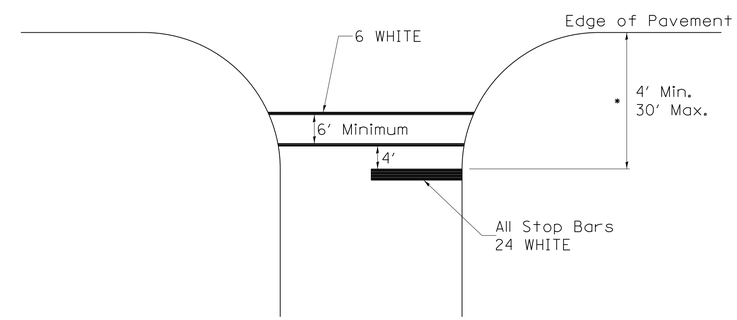

* Distance to the nearest edge of the intersecting roadway in the absence of a marked crosswalk.

FILE NAME = District 2 Standard	USER NAME = IDOT/District 2	DESIGNED -	REVISED - 6-27-14	STATE OF ILLINOIS DEPARTMENT OF TRANSPORTATION	REGION 2 / DISTRICT 2 STANDARD	F.A. RTE.	SECTION	COUNTY	TOTAL SHEETS / SHEET NO.
		DRAWN -	REVISED - 3-05-12						
	PLOT SCALE = 1.0000 ′ / in.	CHECKED -	REVISED -					CONTRACT NO.	
	PLOT DATE = Thu Nov 13 11:29:09 2014	DATE -	REVISED -		SCALE: SHEET NO. OF SHEETS STA. TO STA.	FED. ROAD DIST. NO.	ILLINOIS	FED. AID PROJECT	

TYPICAL PAVEMENT MARKINGS

ARROW LAYOUT

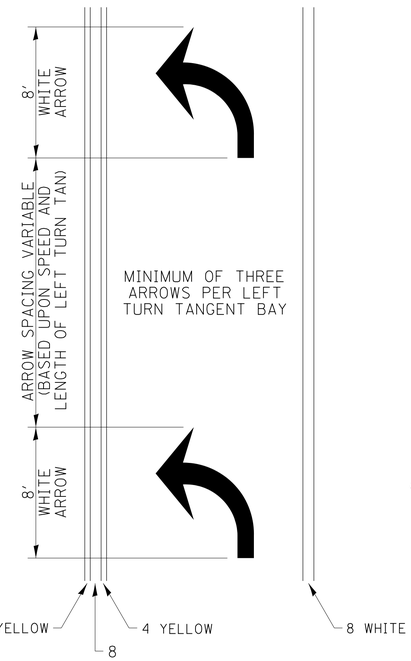

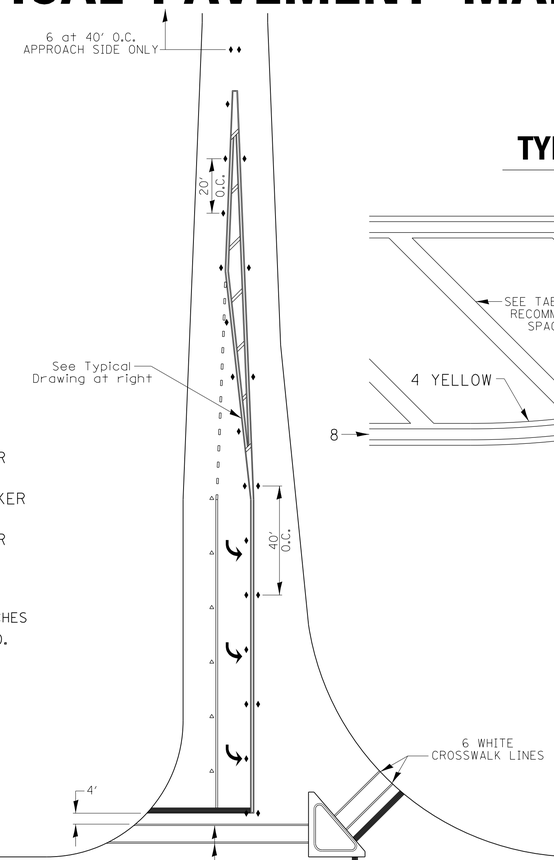

◀ ONE-WAY AMBER MARKER

◁ ONE-WAY CRYSTAL MARKER

◆ TWO-WAY AMBER MARKER

ALL DIMENSIONS ARE IN INCHES UNLESS OTHERWISE NOTED.

TYPICAL PAVEMENT MARKING FOR FLUSH MEDIAN

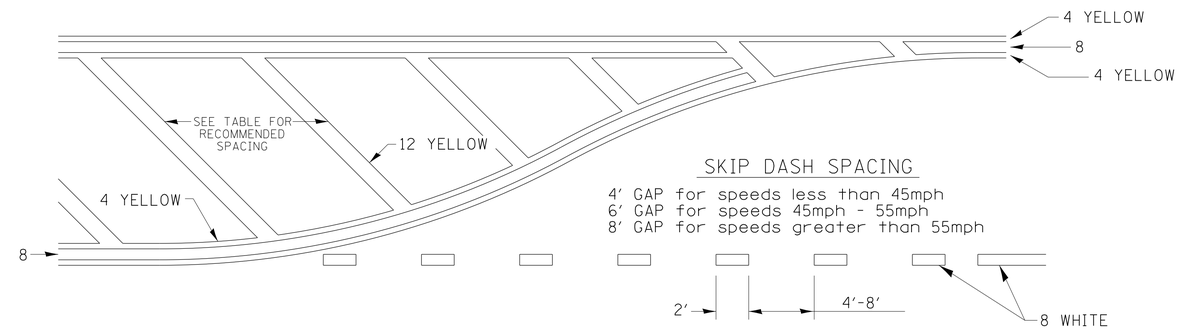

SKIP DASH SPACING

4' GAP for speeds less than 45mph
6' GAP for speeds 45mph - 55mph
8' GAP for speeds greater than 55mph

RECOMMENDED SPACING BETWEEN DIAGONALS (IN FEET)

Speed Limit Range	Continuous Median Area	Intersection Channelization	Objects (Islands)
less than 30MPH	50'	15'	10'
30-40MPH	75'	20'	15'
45MPH & over	75'	30'	20'

NOTE: if the spacing recommended in the Table does not permit at least five diagonal lines in the area being marked, the spacing from the next lowest speed range should be used. The recommended spacing is measured parallel to the pavement center line.

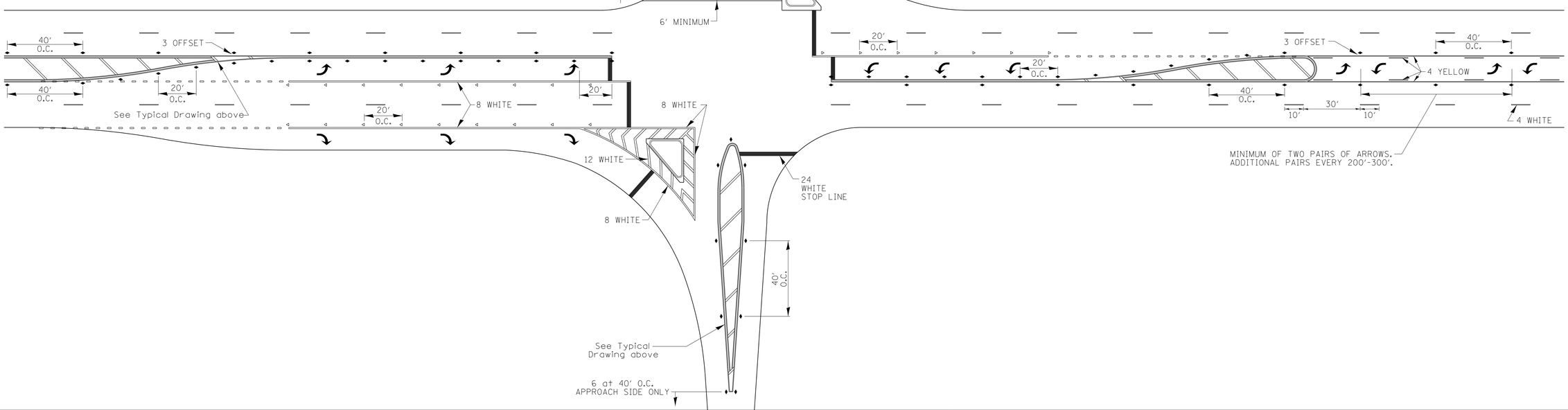

FILE NAME = District 2 Standard	USER NAME = IDOT/District 2	DESIGNED -	REVISED - 6-27-14	STATE OF ILLINOIS DEPARTMENT OF TRANSPORTATION	REGION 2 / DISTRICT 2 STANDARD	F.A. RTE.	SECTION	COUNTY	TOTAL SHEETS / SHEET NO.
		DRAWN -	REVISED - 3-05-12						
	PLOT SCALE = 1.0000 ' / in.	CHECKED -	REVISED -					CONTRACT NO.	
	PLOT DATE = Thu Nov 13 11:29:10 2014	DATE -	REVISED -		SCALE: SHEET NO. OF SHEETS STA. TO STA.	FED. ROAD DIST. NO.	ILLINOIS	FED. AID PROJECT	

TYPICAL PAVEMENT MARKINGS

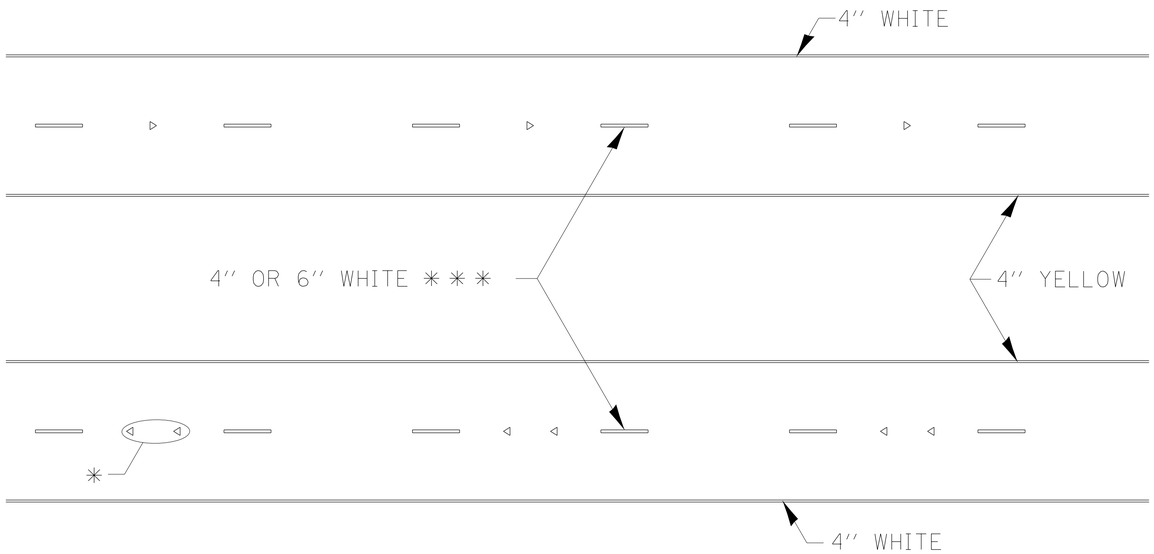

✳ SEE HIGHWAY STANDARD 781001 FOR SPACING DETAILS.
USE DOUBLE MARKERS WHEN ADT > 20,000.

MULTI–LANE / DIVIDED

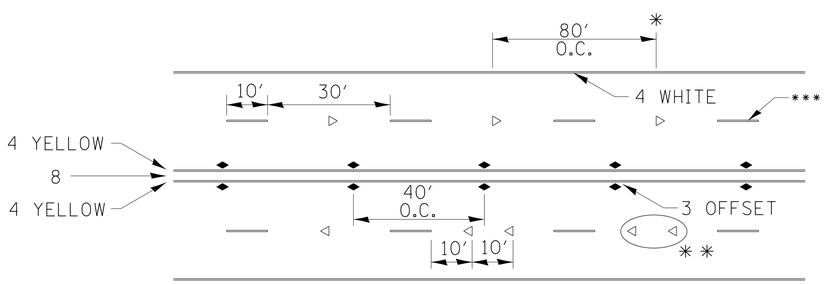

SYMBOLS

* REDUCE TO 40' O.C. ON CURVES WHERE ADVISORY SPEEDS ARE 10 MPH LOWER THAN POSTED SPEEDS.

** USE DOUBLE MARKERS WHEN ADT ≥ 20,000

*** CENTERLINE SKIP DASH PAVEMENT MARKING SPEED LIMIT LESS THAN 40 MPH USE 4'' LINE. SPEED LIMIT 40 MPH AND OVER USE 6'' LINE.

MULTI–LANE / UNDIVIDED & ONE WAY

(FOR MULTI-LANE UNDIVIDED HIGHWAYS USE THIS DETAIL NOT HIGHWAY STANDARD 781001)

TYPICAL PARKING SPACING

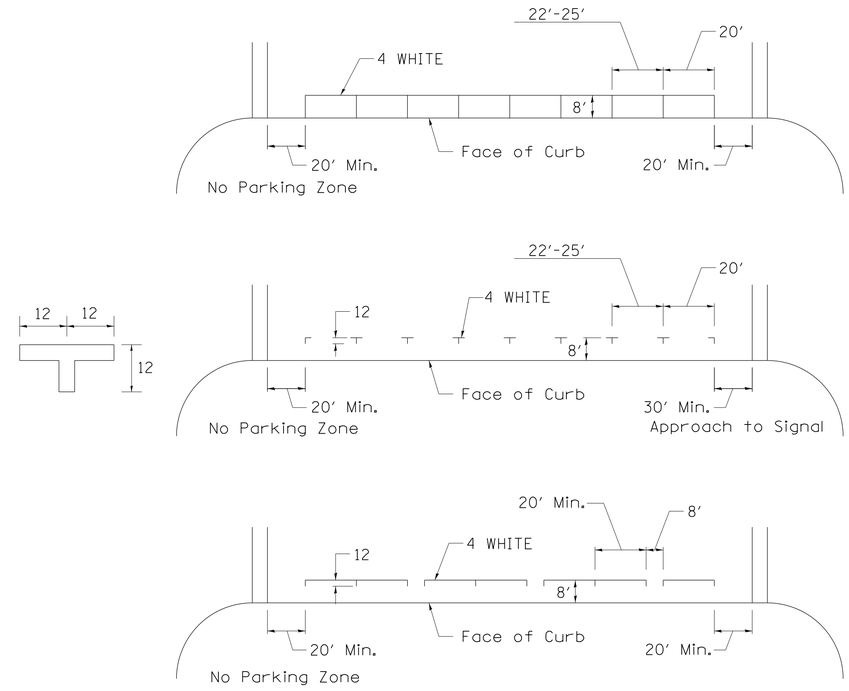

TYPICAL PAVEMENT MARKING FOR TWO LANE SECTION – NO PASSING ZONES

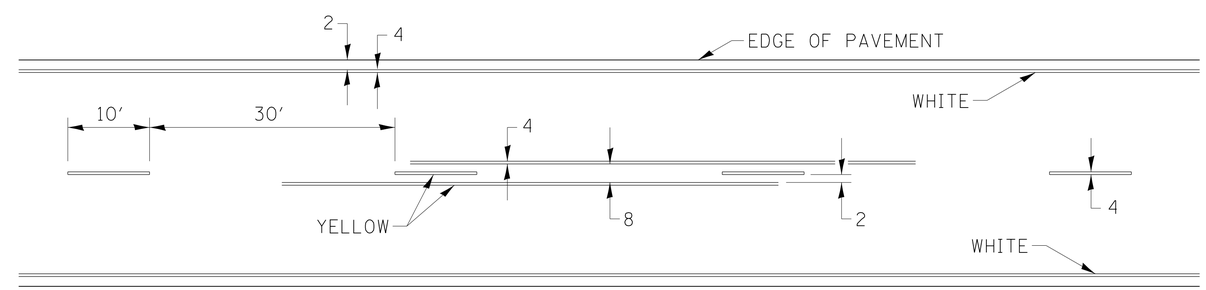

FILE NAME = District 2 Standard	USER NAME = IDOT/District 2	DESIGNED -	REVISED - 6-27-14	STATE OF ILLINOIS DEPARTMENT OF TRANSPORTATION	REGION 2 / DISTRICT 2 STANDARD	F.A. RTE.	SECTION	COUNTY	TOTAL SHEETS / SHEET NO.
		DRAWN -	REVISED - 8-27-13						
	PLOT SCALE = 1.0000 '/ in.	CHECKED -	REVISED - 11-28-12					CONTRACT NO.	
	PLOT DATE = Thu Nov 13 11:29:11 2014	DATE -	REVISED -		SCALE: SHEET NO. OF SHEETS STA. TO STA.	FED. ROAD DIST. NO.	ILLINOIS	FED. AID PROJECT	

PAINTING DETAILS

CENTERLINE SKIP DASH PAVEMENT MARKING WIDTH SHALL BE 4'' WHEN THE POSTED SPEED LIMIT IS UNDER 40 MPH AND 6'' WHEN THE POSTED SPEED LIMIT IS 40 MPH AND OVER.

EXIT RAMP

NOTE: GORE HATCHING PLACED ONLY WHEN SCHEDULED IN THE PLANS

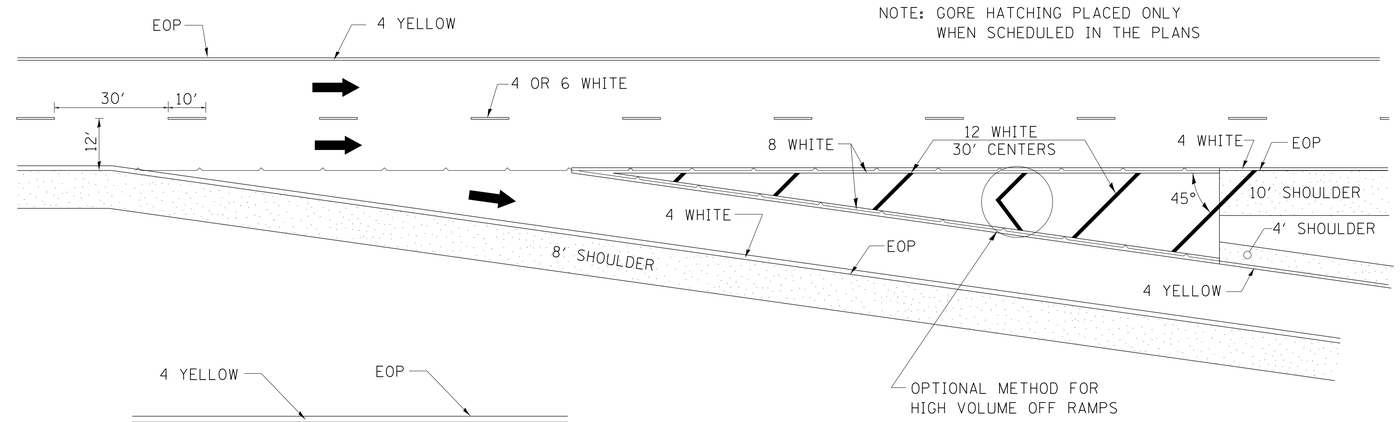

ENTRANCE RAMP

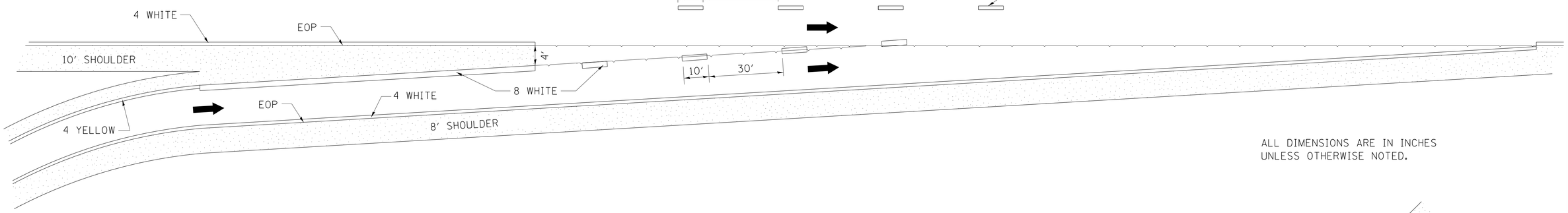

ALL DIMENSIONS ARE IN INCHES UNLESS OTHERWISE NOTED.

CLOVERLEAF

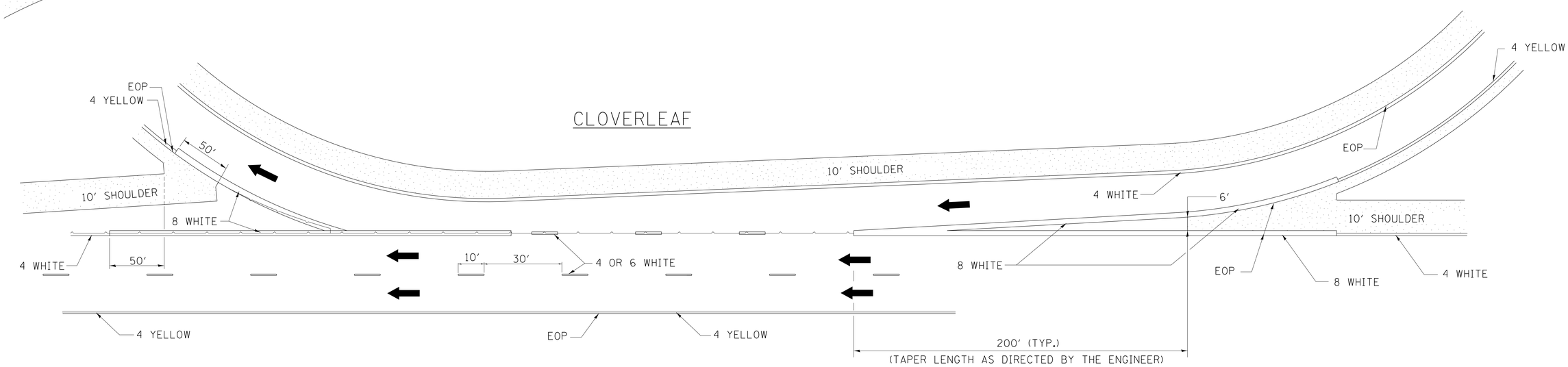

FILE NAME = District 2 Standard	USER NAME = IDOT/District 2	DESIGNED -	REVISED - 8-27-13	STATE OF ILLINOIS DEPARTMENT OF TRANSPORTATION	REGION 2 / DISTRICT 2 STANDARD		F.A. RTE.	SECTION	COUNTY / TOTAL SHEETS / SHEET NO.
		DRAWN -	REVISED - 10-18-11						
	PLOT SCALE = 1.0000 ' / in.	CHECKED -	REVISED -						CONTRACT NO.
	PLOT DATE = Thu Nov 13 11:29:11 2014	DATE -	REVISED -		SCALE:	SHEET NO. OF SHEETS	STA. TO STA.	FED. ROAD DIST. NO.	ILLINOIS FED. AID PROJECT

REMOVE AND REERECT STEEL PLATE BEAM GUARDRAIL

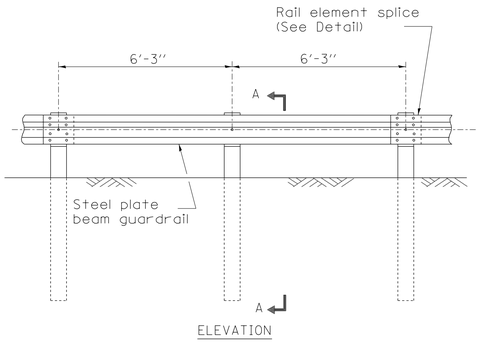

TYPE A

6'-3" Typical post spacing

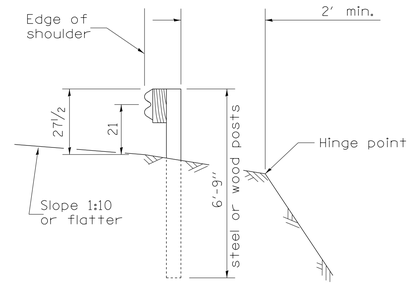

SECTION A-A

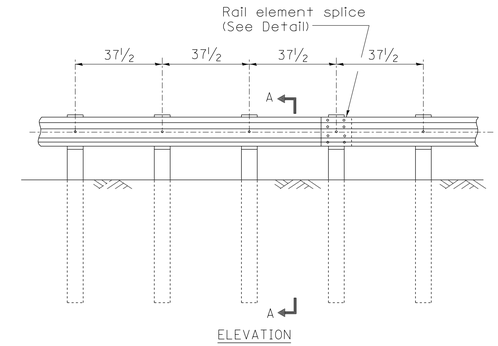

TYPE B

37½ Closed post spacing

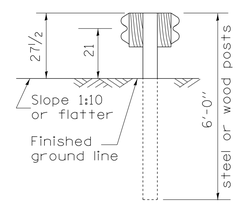

SECTION C-C

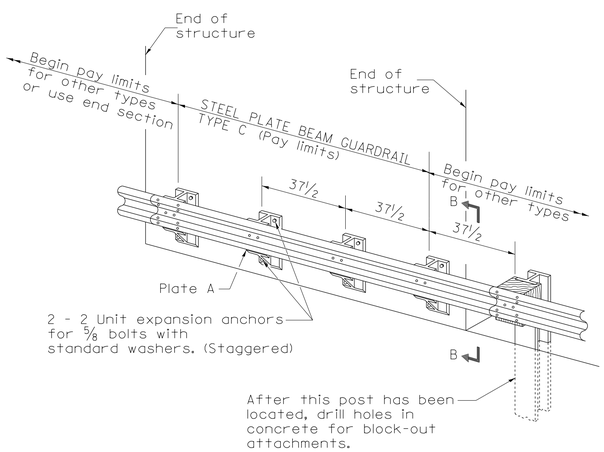

TYPE C

37½ Block-out spacing

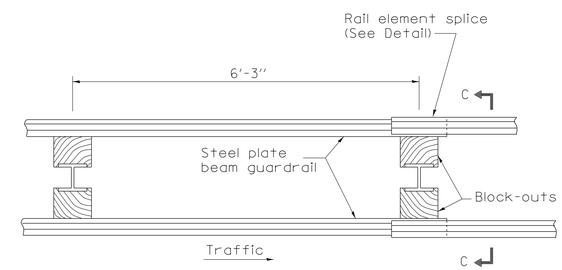

PLAN

TYPE D

Double steel plate beam guardrail
6'-3" typical post spacing

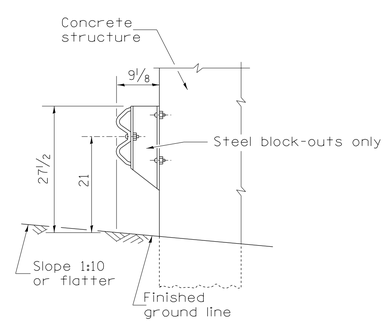

SECTION B-B

GENERAL NOTES

All slope ratios are expressed as units of vertical displacement to units of horizontal displacement (V:H).

All dimensions are in inches unless otherwise shown.

The existing steel posts may be drilled to match the bolt pattern shown herein for the wood block-out, or a new steel post shall be provided.

This detail is applicable to the guardrail system used prior to January 1, 2007. For details on the Midwest Guardrail System, see Standard 630001.

FILE NAME = District 2 Standard	USER NAME = IDOT/District 2	DESIGNED -	REVISED - 10-18-11	STATE OF ILLINOIS DEPARTMENT OF TRANSPORTATION	REGION 2 / DISTRICT 2 STANDARD	F.A. RTE.	SECTION	COUNTY	TOTAL SHEETS / SHEET NO.
		DRAWN -	REVISED -						
	PLOT SCALE = 1.0000 ' / in.	CHECKED -	REVISED -					CONTRACT NO.	
	PLOT DATE = Thu Nov 13 11:29:12 2014	DATE -	REVISED -		SCALE: SHEET NO. OF SHEETS STA. TO STA.	FED. ROAD DIST. NO.	ILLINOIS	FED. AID PROJECT	

REMOVE AND REERECT STEEL PLATE BEAM GUARDRAIL

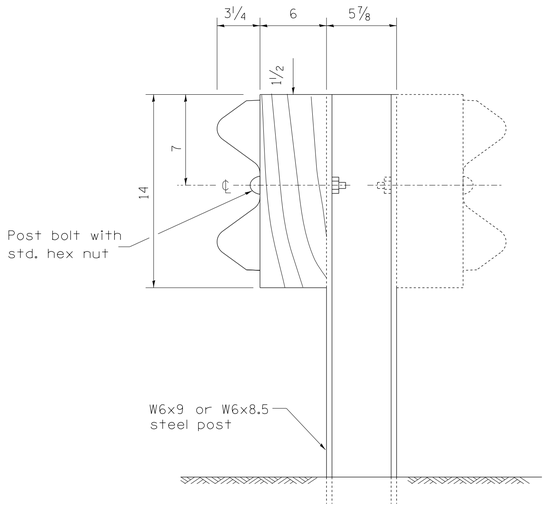

STEEL POST CONSTRUCTION

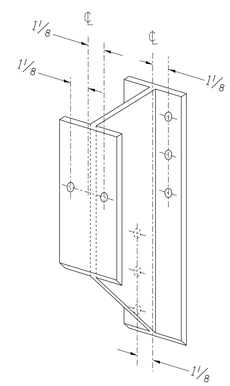

STEEL BLOCK-OUT DETAIL

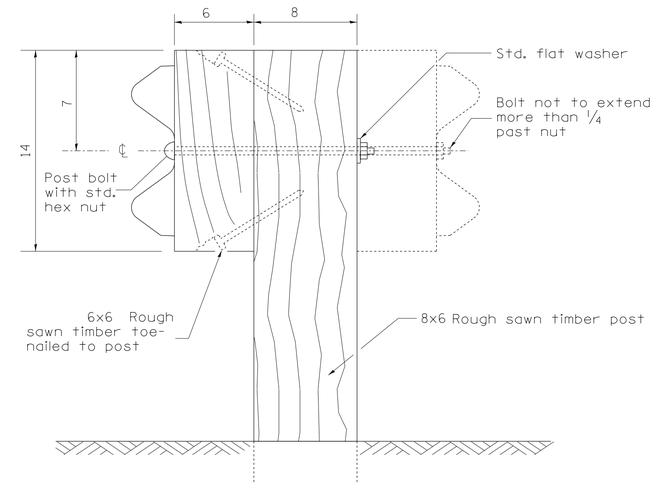

WOOD POST CONSTRUCTION

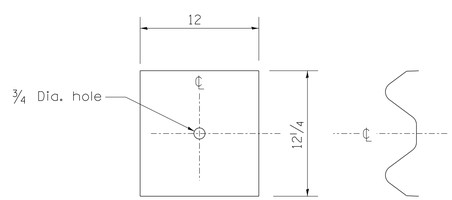

NOTE

Plate A shall be placed between rail element and block-out at non-splice mounting points only when steel block-outs are used.

PLATE A

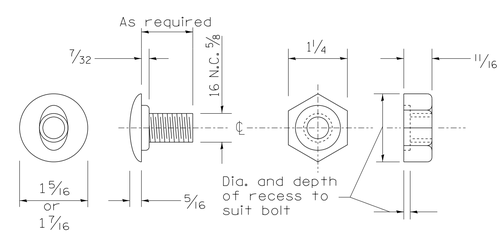

POST OR SPLICE BOLT & NUT

FILE NAME = District 2 Standard	USER NAME = IDOT/District 2	DESIGNED -	REVISED - 10-18-11	STATE OF ILLINOIS DEPARTMENT OF TRANSPORTATION	REGION 2 / DISTRICT 2 STANDARD			F.A. RTE.	SECTION	COUNTY	TOTAL SHEETS	SHEET NO.
		DRAWN -	REVISED -									
	PLOT SCALE = 1.0000 ' / in.	CHECKED -	REVISED -							CONTRACT NO.		
	PLOT DATE = Thu Nov 13 11:29:13 2014	DATE -	REVISED -		SCALE:	SHEET NO. OF SHEETS	STA. TO STA.	FED. ROAD DIST. NO.	ILLINOIS	FED. AID PROJECT		

REMOVE AND REERECT STEEL PLATE BEAM GUARDRAIL

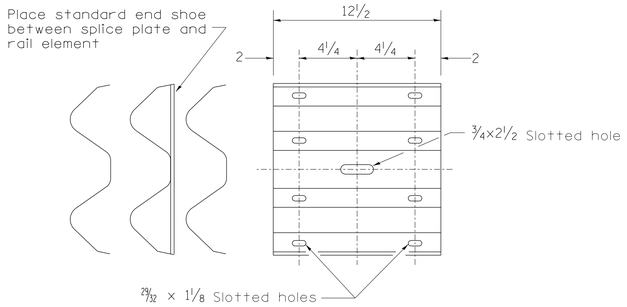

SPLICE PLATE

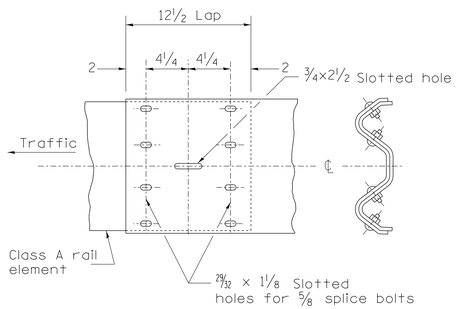

RAIL ELEMENT SPLICE

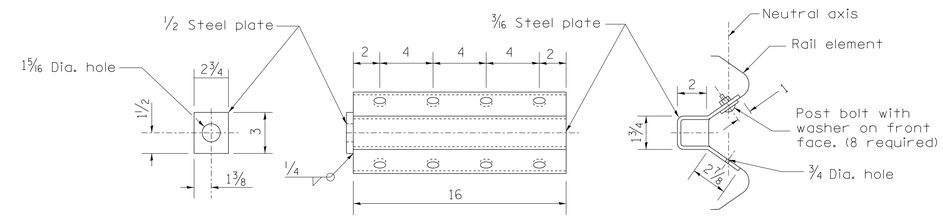

NOTE

Anchor plate T shall be used to attach cable assembly to guardrail when required on traffic barrier terminals.

ANCHOR PLATE T DETAILS

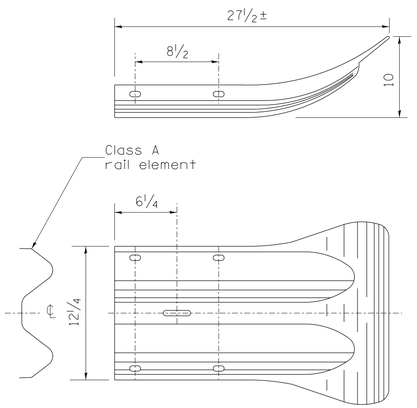

END SECTION

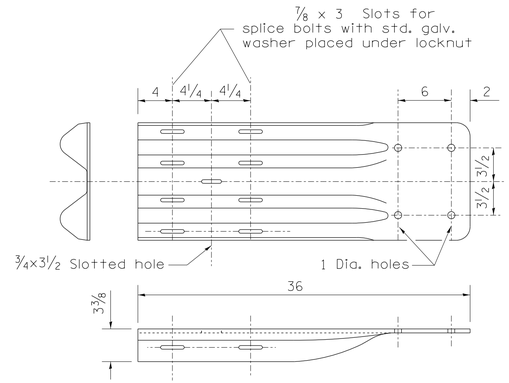

NOTE

When end shoe is attached to a bridge parapet which has an expansion joint, the bolts shall be provided with a locknut or double nut and shall be tightened only to a point that will allow guardrail movement.

The standard end shoe shall be attached to the concrete with pre-drilled or self-drilling anchor bolts. The anchor cone shall be set flush with the surface of the concrete.

Externally threaded studs protruding from the surface of the concrete will not be permitted.

END SHOE

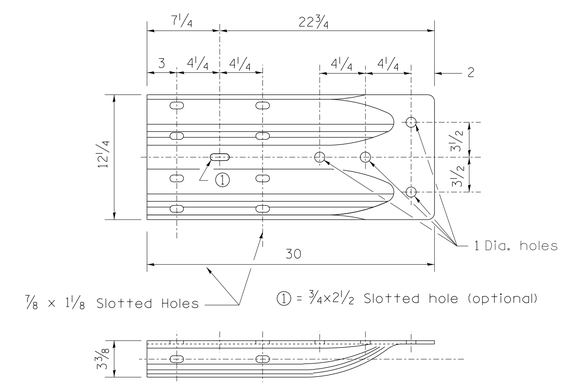

ALTERNATE END SHOE

FILE NAME = District 2 Standard	USER NAME = IDOT/District 2	DESIGNED -	REVISED - 10-18-11	STATE OF ILLINOIS DEPARTMENT OF TRANSPORTATION	REGION 2 / DISTRICT 2 STANDARD	F.A. RTE.	SECTION	COUNTY	TOTAL SHEETS / SHEET NO.
		DRAWN -	REVISED -						
	PLOT SCALE = 1.0000 ' / in.	CHECKED -	REVISED -					CONTRACT NO.	
	PLOT DATE = Thu Nov 13 11:29:13 2014	DATE -	REVISED -		SCALE: SHEET NO. OF SHEETS STA. TO STA.	FED. ROAD DIST. NO.	ILLINOIS	FED. AID PROJECT	

REMOVE AND REERECT STEEL PLATE BEAM GUARDRAIL

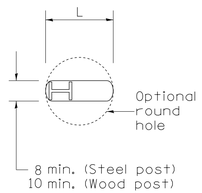

PLAN

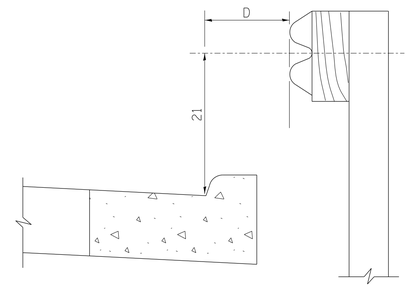

Note:
If it is necessary for D to be more than 12 and less than 10'-0" type M-2 curb and gutter (Std. 606001) shall be used in front of and in advance of the guardrail.

GUARDRAIL PLACED BEHIND CURB

(D = 0 desirable to 12 maximum)

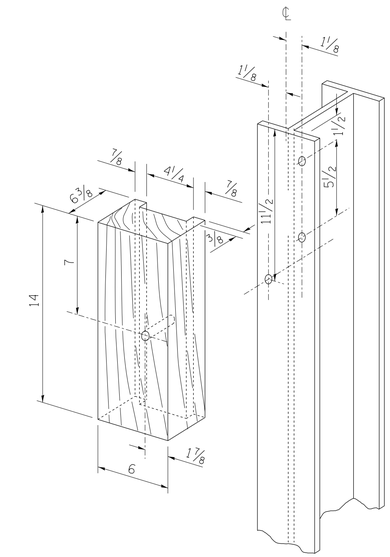

WOOD BLOCK-OUT AND STEEL POST DETAILS

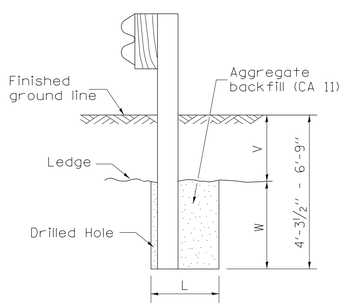

Note:
Ledge line is top of rock ledge or hard slag fill.

ELEVATION

FOOTING FOR POST WHEN IMPERVIOUS MATERIAL IS ENCOUNTERED

V	W	L	
		Steel Post	Wood Post
0 - 18	24	21	23
>18 - 41.5	12	8	10
>41.5 - 53.5	12 - 0	8	10

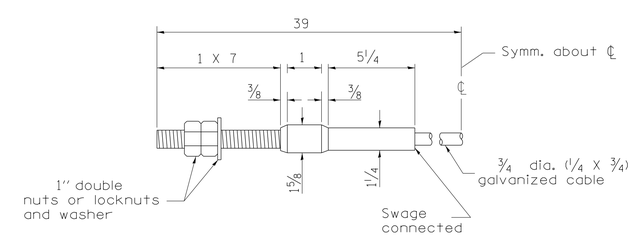

CABLE ASSEMBLY

(40,000 lbs. min. breaking strength)
Tighten to taut tension.

FILE NAME = District 2 Standard	USER NAME = IDOT/District 2	DESIGNED -	REVISED - 10-18-11	STATE OF ILLINOIS DEPARTMENT OF TRANSPORTATION	REGION 2 / DISTRICT 2 STANDARD	F.A. RTE.	SECTION	COUNTY	TOTAL SHEETS / SHEET NO.
		DRAWN -	REVISED -						
	PLOT SCALE = 1.0000 ' / in.	CHECKED -	REVISED -					CONTRACT NO.	
	PLOT DATE = Thu Nov 13 11:29:14 2014	DATE -	REVISED -		SCALE: SHEET NO. OF SHEETS STA. TO STA.	FED. ROAD DIST. NO.	ILLINOIS	FED. AID PROJECT	

TRAFFIC BARRIER TERMINAL, TYPE 2 (27" HEIGHT)

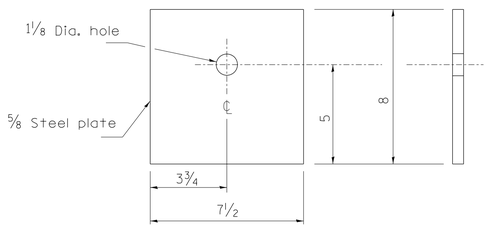

BEARING PLATE K

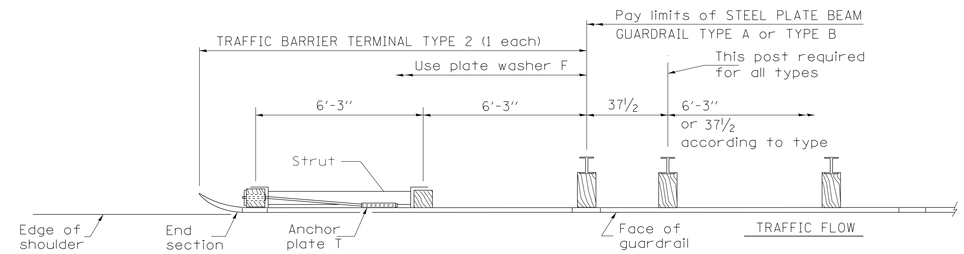

PLAN

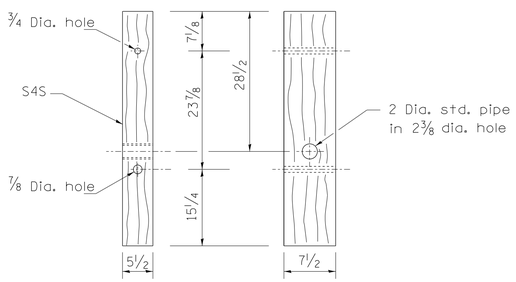

WOOD POST

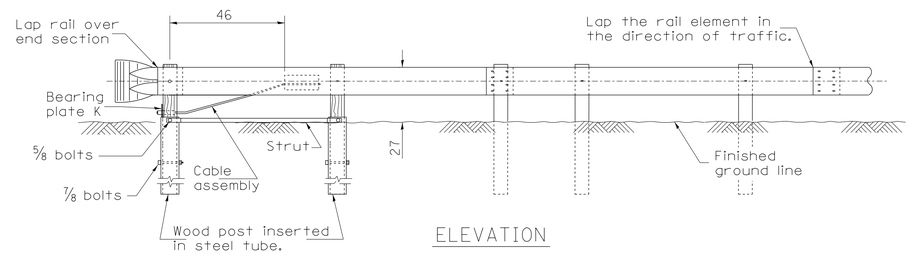

ELEVATION

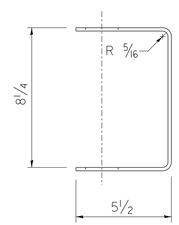

YOKE

3/16 thick steel

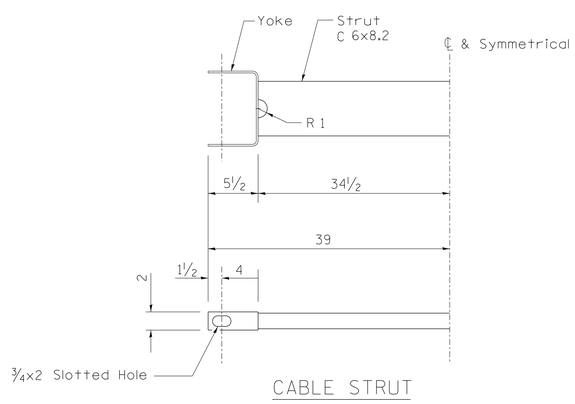

CABLE STRUT

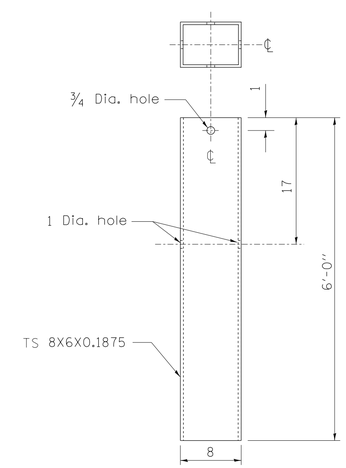

STEEL TUBE

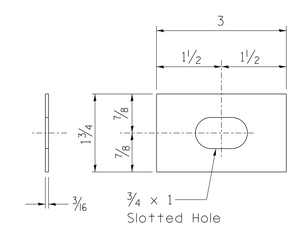

PLATE WASHER F

GENERAL NOTES

See Standard 630001 for details of guardrail not shown.

The bearing plate K shall be held in position by (2) two eight penny nails driven into the post and bent over the top of the plate.

All dimensions are in inches unless otherwise shown.

FILE NAME = District 2 Standard	USER NAME = IDOT/District 2	DESIGNED -	REVISED - 10-18-11	STATE OF ILLINOIS DEPARTMENT OF TRANSPORTATION	REGION 2 / DISTRICT 2 STANDARD	F.A. RTE.	SECTION	COUNTY	TOTAL SHEETS / SHEET NO.
		DRAWN -	REVISED -						
	PLOT SCALE = 1.0000 ' / in.	CHECKED -	REVISED -					CONTRACT NO.	
	PLOT DATE = Thu Nov 13 11:29:14 2014	DATE -	REVISED -		SCALE: SHEET NO. OF SHEETS STA. TO STA.	FED. ROAD DIST. NO.	ILLINOIS	FED. AID PROJECT	

SLOTTED DRAIN PIPE

LOADING CONDITION	MAX. EXTENDER HEIGHT - "H"
H20/H25 • 750 PSI CONCRETE	19"

• 125 PSI TIRE PRESSURE

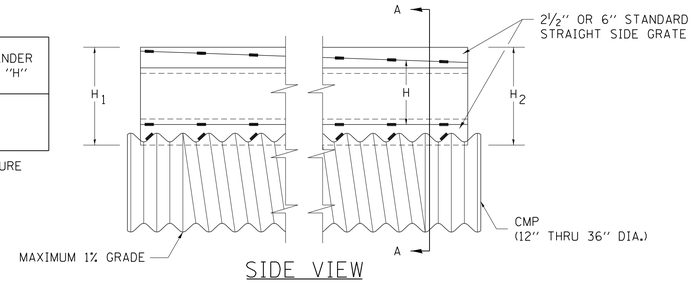

SIDE VIEW

DETAIL WITH VARIABLE HEIGHT GRATE

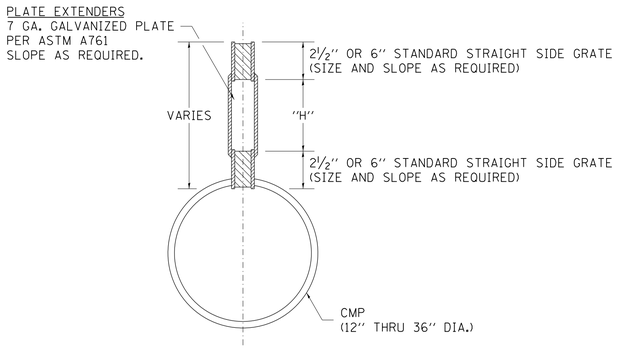

SECTION A-A

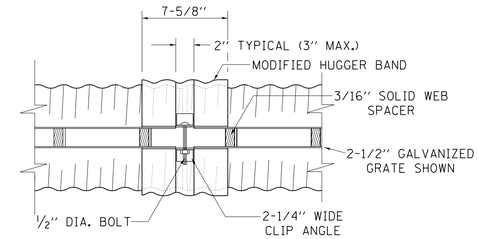

TOP VIEW

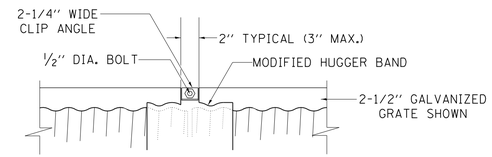

SIDE VIEW

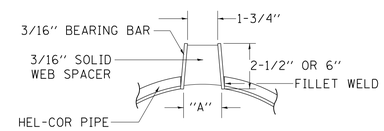

SECTION A-A

STANDARD DETAIL

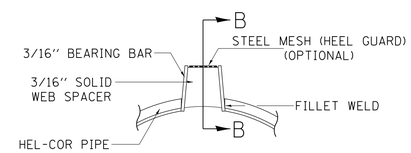

SECTION A-A

DETAIL WITH MESH

(TRAPEZOIDAL GALVANIZED GRATE SHOWN)

STANDARD SIZES						
GAGE OF PIPE	DIAMETER OF PIPE					
	12"	15"	18"	24"	30"	36"
16	X	X	X	X	X	X
14	X	X	X	X	X	X
12	N.A.	N.A.	N.A.	N.A.	X	X

GRATE TYPE		"A"
VERT	2-1/2"	1-3/4"
VERT	6"	1-3/4"
TRAP	2-1/2"	2-1/4"
TRAP	6"	3"

VERT = VERTICAL
TRAP = TRAPIZOIDAL

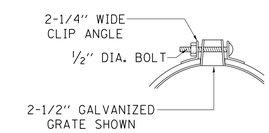

END VIEW

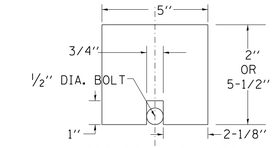

GAP PLATE (OPTIONAL)
MAY BE PLACED DIRECTLY OVER BAND BOLT TO PROVIDE CONTINUOUS FORM FOR GROUTING.

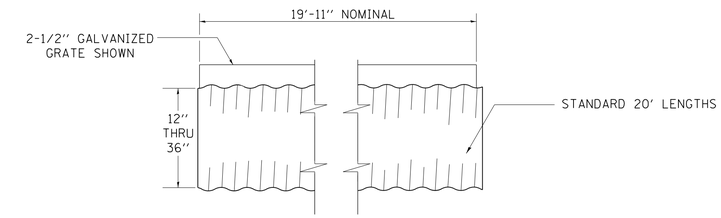

TYPICAL PIPE SECTION

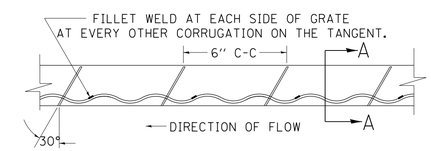

GRATE WELDING DETAIL

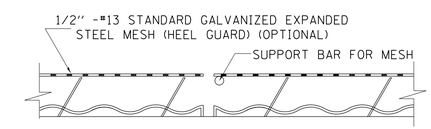

SECTION B-B

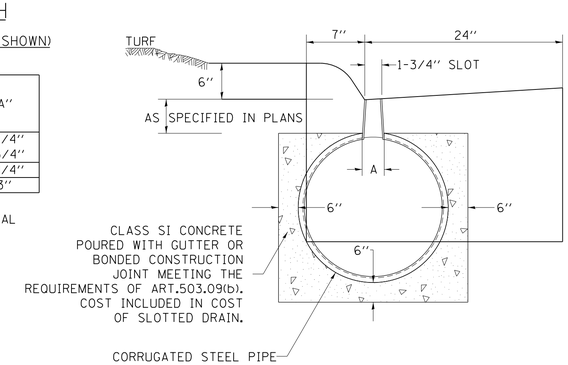

DETAIL FOR CURB & GUTTER

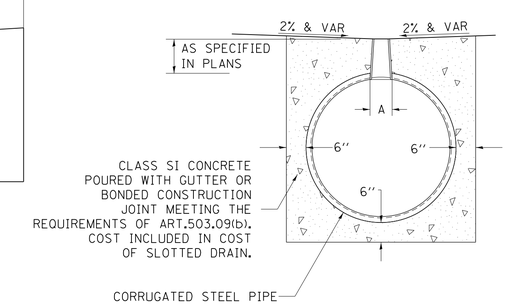

DETAIL FOR CROSSOVERS, DRIVEWAYS, OR PARKING LOTS

ALL DIMENSIONS ARE IN INCHES UNLESS OTHERWISE NOTED.

GENERAL

Class SI Concrete shall be used throughout.
This specification covers Slottted Drain used for the removal of water as shown on the plans.
The Slotted Drain shall be Corrugated Pipe Culvert with Integral Slotted Drains.
Before placing the concrete adjacent to the pipe, the slot shall be covered by either thin, flat metal sheeting or by a board notched to fit over the grate bars. This covering must fit closely in the slot to prevent entry of concrete into the pipe. Paving over the slotted drain will then be one continuous operation over the protected drain. The protection for the drain slot shall then be removed. The pipe shall drain into the side of the inlet. The opening where the slot is removed shall be covered to prevent concrete from entering the pipe.
The Corrugated Steel Pipe used in the Slotted Drain shall meet the requirements of AASHTO M36/ASTM A760.
The CMP shall be ALUMINIZED STEEL Type 2.
The diameter shall be as shown on the plans.
Steel grating shall meet the galvanizing requirements of AASHTO M111.
This work will be paid for at the contract unit price per foot for SLOTTED DRAIN of the pipe diameter specified WITH VARIABLE SLOT,or SLOTTED DRAIN, of the pipe diameter specified, WITH 6" SLOT, and shall include concrete and grating for depth specified on plans.
Use approved end cap to prevent concrete entry into the pipe during gutter construction on the upstream end of the pipe.

CONNECTIONS

The Corrugated Steel Pipe shall have a minimum of two rerolled annular ends.
The Slotted Drain bands shall be modified HUGGER Bands to secure the pipe and prevent infiltration of the backfill.
When the Slotted Drain is banded together, the adjacent grates shall have a maximum 3" gap.

GRATES

The grates shall be manufactured from ASTM A670, Grade 36 steel. The spacers and bearing bars (sides) shall be 3/16 " material ±0.008".
The spacers shall be on 6" centers and welded on both sides to each bearing bar (sides) with four (4) 1- 1/4 " long 3/16 " fillet welds on each side of the bearing bar.
The plate extender shall be 7 gage steel meeting ASTM A761.
The engineer may call for tensile strength tests on the grate if the grate is not in compliance with the above spacer specifications. If tensile strength tests are called for, minimum results for an in-place spacer pulled perpendicular to the bearing bar shall be:
T= 12,000 pounds for 2- 1/2 " grate
T= 15,000 pounds for 6" grate

GALVANIZING

The grate and plate extenders shall be galvanized in accordance with ASTM A123 except with a 2 oz. galvanized coating.

GRATE ATTACHED TO CSP

The grate shall be fillet welded with a minimum weld 1" long to the CSP on each side of the grate at every other corrugation.

TOLERANCES - FINISHED SLOTTED DRAIN - 20' LENGTHS

Vertical Bow= ± 3/8 "
Horizontal Bow= ± 5/8 "
Twist= ± 1/2 "

SLOTTED DRAIN NOTES

1. GRATING IS AVAILABLE IN DEPTHS OF 2-1/2" AND 6".
2. VERTICAL GRATING (STRAIGHT SIDES) WITH VERTICAL SPACERS IS ALSO AVAILABLE.
3. FOR 6" VERTICAL & TRAPIZOIDAL REQUIREMENTS, THE SLOTTED DRAIN BAND MAY BE FURNISHED WITH THE 4" TECHCO BAND ANGLE.
4. DIMENSIONS ARE SUBJECT TO MANUFACTURING TOLERANCES.
5. DIMENSIONS FOR H_1 AND H_2 AS REQUIRED.
6. H_1 AND H_2 MEASURED FROM TOP OF GRATE TO BOTTOM OF GRATE.

DETAIL OF FLOOD GATE

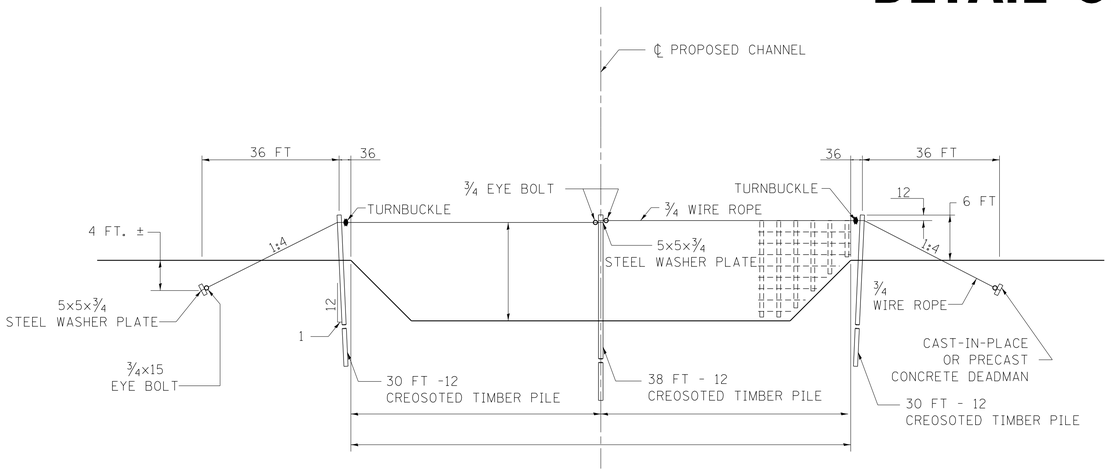

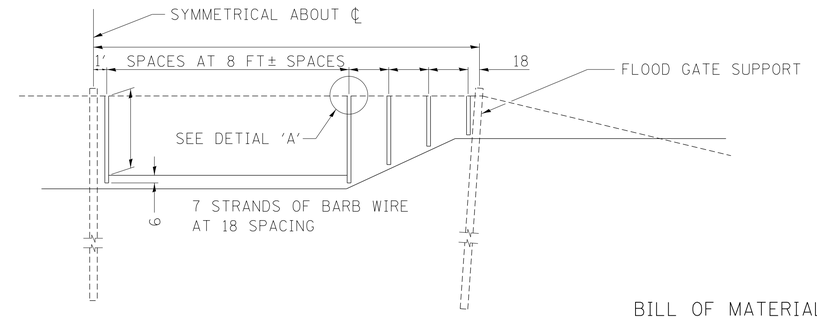

NOTE:
THIS WORK WILL BE PAID FOR AT THE CONTRACT UNIT PRICE PER EACH FOR

BILL OF MATERIALS

QUANTITY	UNIT	ITEM
	FT	2 × 4 TREATED LUMBER
	FT	GALVANIZED BARBED WIRE
	FT	SPECIAL STEEL CHANNEL SC 25, 2½ × 2½
	EACH	⅜ × 3 GALVANIZED STEEL BOLTS AND WASHERS
	EACH	⅜ × 2 GALVANIZED STEEL U-BOLTS
	EACH	GALVANIZED CABLE CLAMPS
	LBS	GALVANIZED FENCE STAPLES

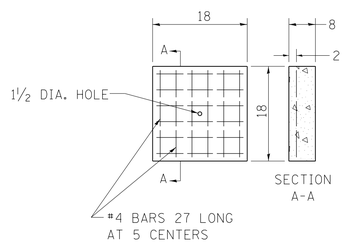

QUANTITIES FOR 2 DEADMEN

0.3 CU.YD CLASS SI CONCRETE
36 LBS REINFORCEMENT BARS

DETAIL OF PRECAST CONCRETE DEADMAN

BILL OF MATERIALS

QUAN.	UNIT	ITEM
	FT	¾ DIA. GALVANIZED WIRE ROPE
	EACH	¾ DIA. × 15 GALVANIZED EYE BOLTS WITH NUTS AND WASHERS
	EACH	¾ DIA. GALVANIZED TURNBUCKLES
	EACH	¾ DIA. GALVANIZED CABLE CLAMPS
	EACH	5×5×¾ STEEL WASHER PLATES
	EACH	PRECAST CONCRETE DEADMEN OR CAST-IN-PLACE CONCRETE DEADMEN
	FT	12 CREOSOTED TIMBER PILE (INCLUDES FURNISHING AND DRIVING TIMBER PILE)

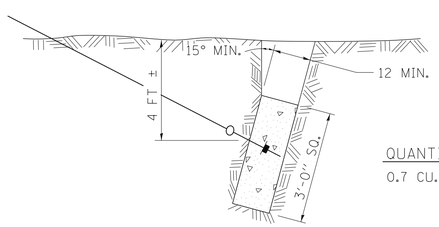

QUANTITIES FOR 2 DEADMEN

0.7 CU. YD. CLASS SI CONCRETE

DETAIL OF CAST-IN-PLACE CONCRETE DEADMAN

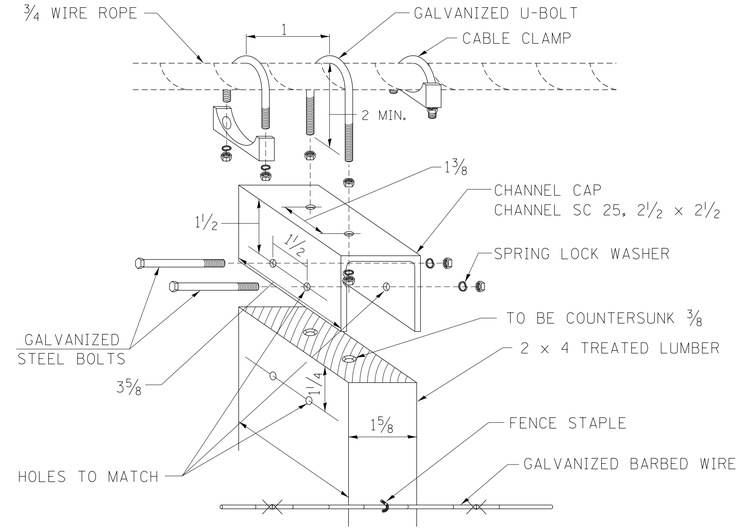

DETIAL 'A'

EXPLODED VIEW OF FLOOD GATE TO CABLE

NOTE:
PRECAST CONCRETE DEADMEN AND CAST-IN-PLACE CONCRETE DEADMEN SHALL BE CONSTRUCTED OF CLASS SI CONCRETE

ALL DIMENSIONS ARE IN INCHES UNLESS OTHERWISE NOTED.

FILE NAME = District 2 Standard	USER NAME = IDOT/District 2	DESIGNED -	REVISED - 8-09-12	STATE OF ILLINOIS DEPARTMENT OF TRANSPORTATION	REGION 2 / DISTRICT 2 STANDARD	F.A. RTE.	SECTION	COUNTY	TOTAL SHEETS / SHEET NO.
		DRAWN -	REVISED -						
	PLOT SCALE = 1.0000 ' / in.	CHECKED -	REVISED -					CONTRACT NO.	
	PLOT DATE = Thu Nov 13 11:29:16 2014	DATE -	REVISED -		SCALE: SHEET NO. OF SHEETS STA. TO STA.	FED. ROAD DIST. NO.	ILLINOIS	FED. AID PROJECT	

40' SINGLE LANE MEDIAN CROSSOVER

(POSTED SPEED LIMIT 55 MPH, WORK ZONE SPEED LIMIT 45 MPH)

TYPICAL SECTION

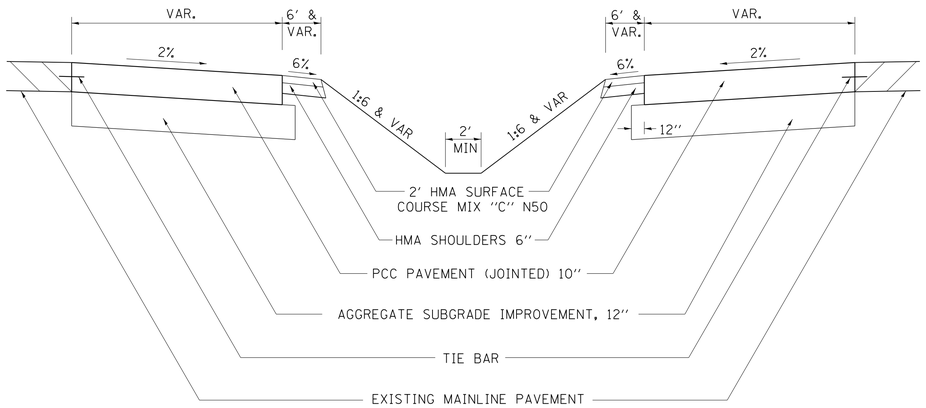

TABLE OF OFFSETS AND DROPS						
Distance feet from location station	0	60' (B)	75'	100'	125'	143.73' (C)
Offsets feet from inside edge of pavement	20' (℄)	18'	15.32'	11.37'	8.06'	6.00'
Drop feet from inside edge of pavement	0.0'	0.0'	0.0'	0.0'	0.0'	0.0'

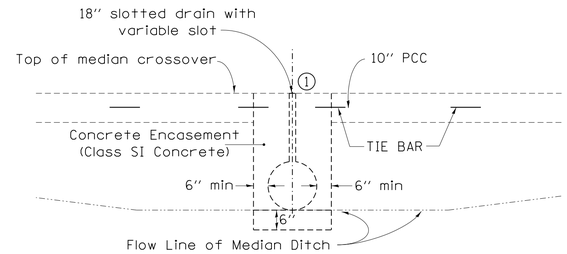

SECTION A–A

(USE TO MAINTAIN MEDIAN DRAINAGE THROUGH THE CROSSOVER)

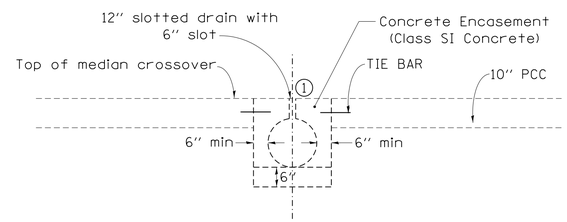

1 Duct tape or wood blocks shall be used to cover slotted drain during construction of crossover paving

SECTION A–A

(WHEN CROSSOVER IS AT MEDIAN HIGH POINT)

GENERAL NOTES

Construction of median crossover shall conform to the requirement of current Standard Specifications.

Slotted drain shall be constructed of 14 or 16 gauge corrugated metal roadway pipe modified to accommodate slotted drain as shown.

Pavement, subbase, & shoulder quantities are:

(1340.88 Sq. Yds.)	AGGREGATE SUBGRADE IMPROVEMENT, 12"
(1250.80 Sq. Yds.)	P.C.C. PAVEMENT, (JOINTED) 10"
(45.1 Tons)	2" HMA SURFACE COURSE, MIX "C", N50
(402.52 Sq. Yds.)	HMA SHOULDERS 6"

Elbows and Caps shall be considered included to the SLOTTED DRAIN 12" WITH 6" SLOT.

See District Standard 61.2 or 68.1 for details for the slotted drain.

See District Standard 86.1 for details for the beveled pipe & guard.

The crossover is designed using a 45mph design speed.

The end of the pipe guard shall be set where a minimum 1:4 front slope can be constructed from each side of pipe guard to the HMA shoulder.

The PCC Pavement (Jointed) 10" shall be constructed according to Section 420 of the Standard Specifications and Highway Standards 420001, 420101, & 420106

The PCC Pavement (Jointed) 10" shall be tied to adjacent existing concrete pavement and the concrete encasement for the slotted drain. The tie bars shall be No.6 bars 24" long @ 30" cts, and installed according to the applicable portions of Article 420.05 (b) of the Standard Specifications. The cost of the bars to be included in the cost of the PCC Pavement (Jointed) 10".

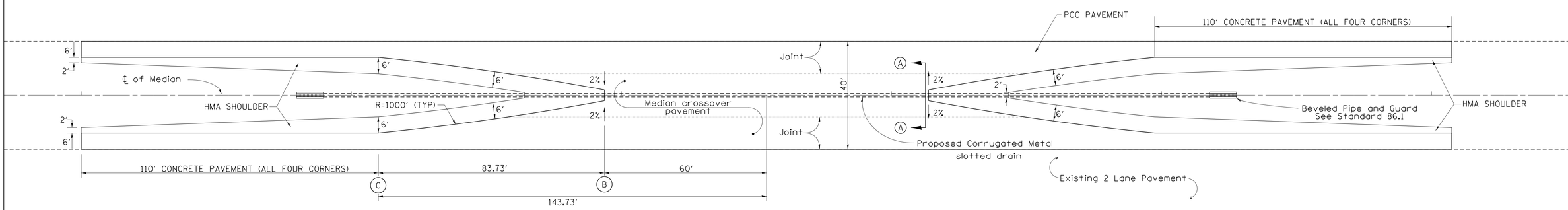

TYPICAL PLAN

Unless otherwise specified, when the median crossover is to be removed, the Contractor shall be required to saw full-depth along the shoulder line 6' from edge of pavement). The 6' adjacent to the edge of pavement shall remain in place and be used as shoulders. The cost of Sawing shall be included in the Pavement Removal.

Longitudinal joints shall be sawed at a max 12' width. All joints shall be sealed.

TRAFFIC CONTROL STANDARD 701416 IS TO BE USED WITH THIS DETAIL

FILE NAME = District 2 Standard	USER NAME = IDOT/District 2	DESIGNED -	REVISED - 8-27-13	STATE OF ILLINOIS DEPARTMENT OF TRANSPORTATION	REGION 2 / DISTRICT 2 STANDARD	F.A. RTE.	SECTION	COUNTY	TOTAL SHEETS / SHEET NO.
		DRAWN -	REVISED - 12-07-10						
	PLOT SCALE = 1.0000 '/ in.	CHECKED -	REVISED -					CONTRACT NO.	
	PLOT DATE = Thu Nov 13 11:29:16 2014	DATE -	REVISED -		SCALE: SHEET NO. OF SHEETS STA. TO STA.	FED. ROAD DIST. NO.	ILLINOIS	FED. AID PROJECT	

50' SINGLE LANE MEDIAN CROSSOVER

(POSTED SPEED LIMIT 55 MPH, WORK ZONE SPEED LIMIT 45 MPH)

TYPICAL SECTION

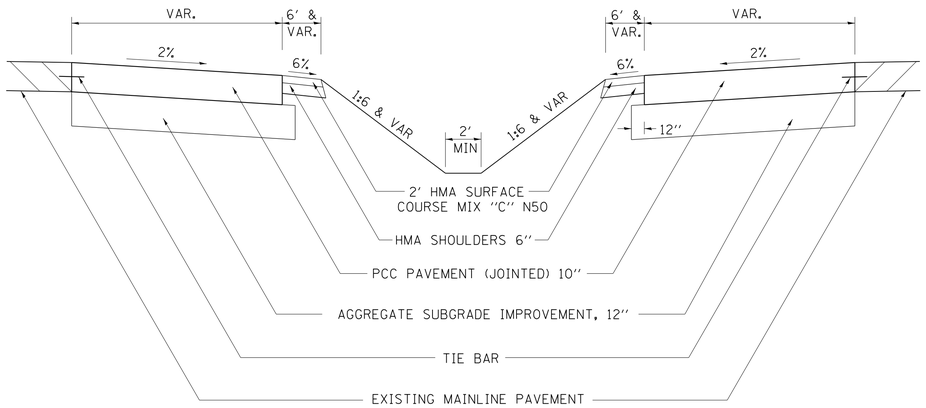

TABLE OF OFFSETS AND DROPS							
Distance feet from location station	0'	53' (B)	75'	100'	125'	150.00'	161.73' (C)
Offsets feet from inside edge of pavement	25' (℄)	23'	18.57'	14.14'	10.37'	7.25'	6.00'
Drop feet from inside edge of pavement	0.5'	0.46'	0.37'	0.28'	0.021'	0.15'	0.12'

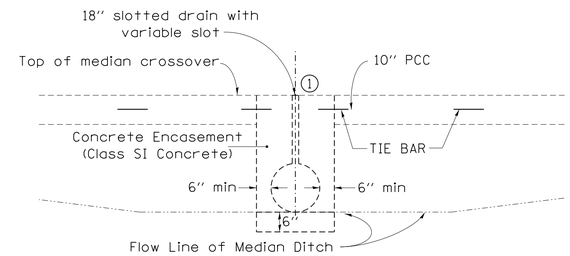

SECTION A–A

(USE TO MAINTAIN MEDIAN DRAINAGE THROUGH THE CROSSOVER)

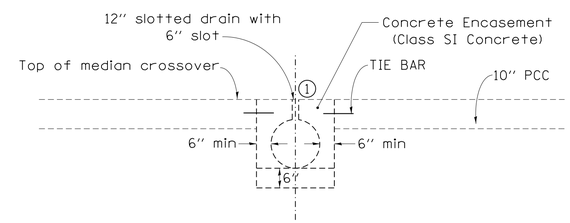

1 Duct tape or wood blocks shall be used to cover slotted drain during construction of crossover paving

SECTION A–A

(WHEN CROSSOVER IS AT MEDIAN HIGH POINT)

GENERAL NOTES

Construction of median crossover shall conform to the requirement of current Standard Specifications.

Slotted drain shall be constructed of 14 or 16 gauge corrugated metal roadway pipe modified to accommodate slotted drain as shown.

Pavement, subbase, & shoulder quantities are:

(1634.94 Sq. Yds.)	AGGREGATE SUBGRADE IMPROVEMENT, 12"
(1533.52 Sq. Yds.)	P.C.C. PAVEMENT, (JOINTED) 10"
(52.9 Tons)	2" HMA SURFACE COURSE, MIX "C", N50
(472.79 Sq. Yds.)	HMA SHOULDERS 6"

Elbows and Caps shall be considered included to the SLOTTED DRAIN 12" WITH 6" SLOT.

See District Standard 61.2 or 68.1 for details for the slotted drain.

See District Standard 86.1 for details for the beveled pipe & guard.

The crossover is designed using a 45mph design speed.

The end of the pipe guard shall be set where a minimum 1:4 front slope can be constructed from each side of pipe guard to the HMA shoulder.

The PCC Pavement (Jointed) 10" shall be constructed according to Section 420 of the Standard Specifications and Highway Standards 420001, 420101, & 420106

The PCC Pavement (Jointed) 10" shall be tied to adjacent existing concrete pavement and the concrete encasement for the slotted drain. The tie bars shall be No.6 bars 24" long @ 30" cts, and installed according to the applicable portions of Article 420.05 (b) of the Standard Specifications. The cost of the bars to be included in the cost of the PCC Pavement (Jointed) 10".

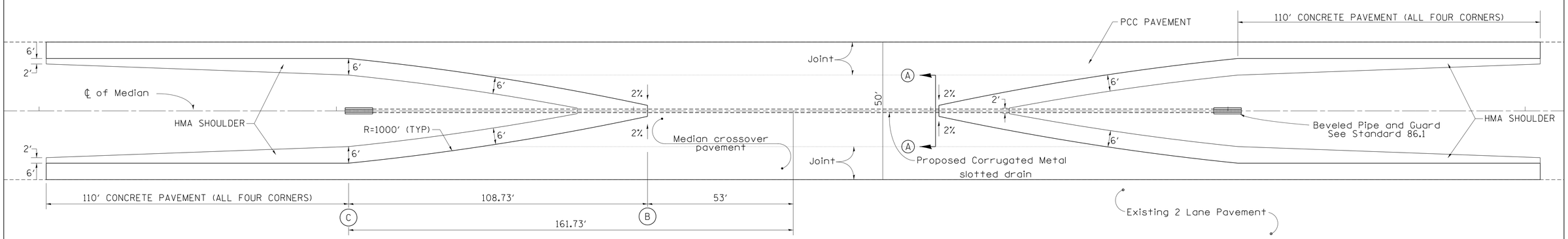

TYPICAL PLAN

Unless otherwise specified, when the median crossover is to be removed, the Contractor shall be required to saw full-depth along the shoulder line 6' from edge of pavement). The 6' adjacent to the edge of pavement shall remain in place and be used as shoulders. The cost of Sawing shall be included in the Pavement Removal.

Longitudinal joints shall be sawed at a max 12' width. All joints shall be sealed.

TRAFFIC CONTROL STANDARD 701416 IS TO BE USED WITH THIS DETAIL

FILE NAME = District 2 Standard	USER NAME = IDOT/District 2	DESIGNED -	REVISED - 8-27-13
		DRAWN -	REVISED - 12-07-10
	PLOT SCALE = 1.0000 '/ in.	CHECKED -	REVISED -
	PLOT DATE = Thu Nov 13 11:29:17 2014	DATE -	REVISED -

STATE OF ILLINOIS
DEPARTMENT OF TRANSPORTATION

REGION 2 / DISTRICT 2 STANDARD

SCALE: | SHEET NO. OF SHEETS | STA. TO STA.

F.A. RTE.	SECTION	COUNTY	TOTAL SHEETS	SHEET NO.
		CONTRACT NO.		
FED. ROAD DIST. NO.	ILLINOIS	FED. AID PROJECT		

64' SINGLE LANE MEDIAN CROSSOVER

(POSTED SPEED LIMIT 55 MPH, WORK ZONE SPEED LIMIT 45 MPH)

TYPICAL SECTION

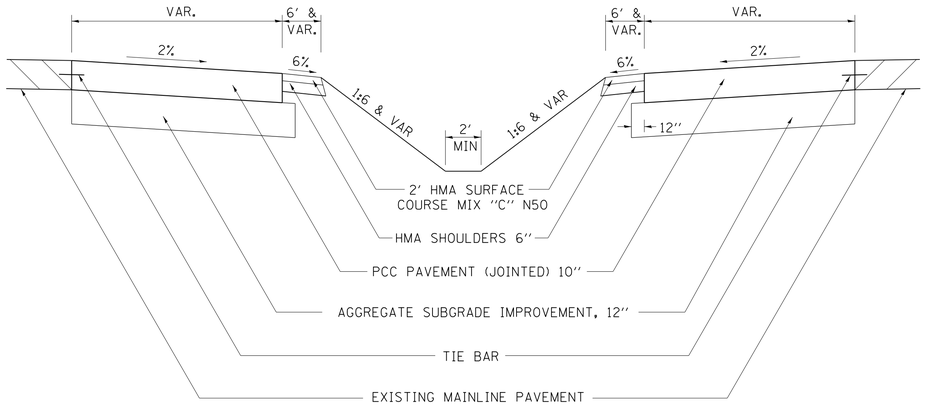

TABLE OF OFFSETS AND DROPS									
Distance feet from location station	0	46' (B)	50'	75'	100'	125'	150'	175'	185.20' (C)
Offsets feet from inside edge of pavement	32' (℄)	30'	29.02'	23.32'	18.28'	13.90'	10.17'	7.08'	6'
Drop feet from inside edge of pavement	0.64'	0.6'	0.58'	0.47'	0.37'	0.28'	0.20'	0.14'	0.12'

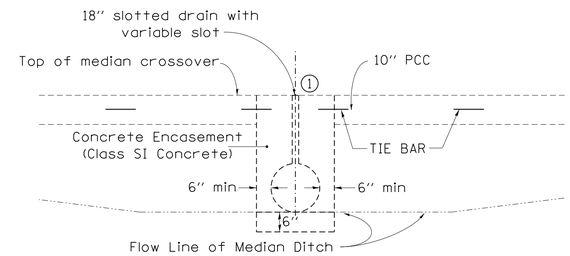

SECTION A–A

(USE TO MAINTAIN MEDIAN DRAINAGE THROUGH THE CROSSOVER)

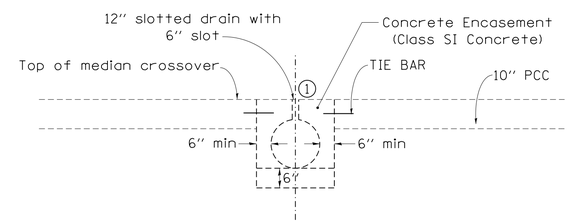

1 Duct tape or wood blocks shall be used to cover slotted drain during construction of crossover paving

SECTION A–A

(WHEN CROSSOVER IS AT MEDIAN HIGH POINT)

GENERAL NOTES

Construction of median crossover shall conform to the requirement of current Standard Specifications.

Slotted drain shall be constructed of 14 or 16 gauge corrugated metal roadway pipe modified to accommodate slotted drain as shown.

Pavement, subbase, & shoulder quantities are:

(2071.96 Sq. Yds.)	AGGREGATE SUBGRADE IMPROVEMENT, 12"
(1956.64 Sq. Yds.)	P.C.C. PAVEMENT, (JOINTED) 10"
(62.5 Tons)	2" HMA SURFACE COURSE, MIX "C", N50
(558.24 Sq. Yds.)	HMA SHOULDERS 6"

Elbows and Caps shall be considered included to the SLOTTED DRAIN 12" WITH 6" SLOT.

See District Standard 61.2 or 68.1 for details for the slotted drain.

See District Standard 86.1 for details for the beveled pipe & guard.

The crossover is designed using a 45mph design speed.

The end of the pipe guard shall be set where a minimum 1:4 front slope can be constructed from each side of pipe guard to the HMA shoulder.

The PCC Pavement (Jointed) 10" shall be constructed according to Section 420 of the Standard Specifications and Highway Standards 420001, 420101, & 420106

The PCC Pavement (Jointed) 10" shall be tied to adjacent existing concrete pavement and the concrete encasement for the slotted drain. The tie bars shall be No.6 bars 24" long @ 30" cts, and installed according to the applicable portions of Article 420.05 (b) of the Standard Specifications. The cost of the bars to be included in the cost of the PCC Pavement (Jointed) 10".

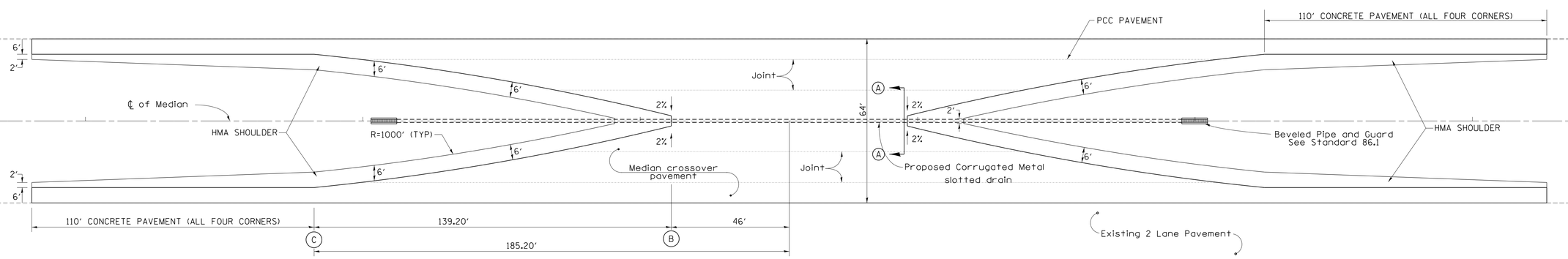

TYPICAL PLAN

Unless otherwise specified, when the median crossover is to be removed, the Contractor shall be required to saw full-depth along the shoulder line 6' from edge of pavement). The 6' adjacent to the edge of pavement shall remain in place and be used as shoulders. The cost of Sawing shall be included in the Pavement Removal.

Longitudinal joints shall be sawed at a max 12' width. All joints shall be sealed.

TRAFFIC CONTROL STANDARD 701416 IS TO BE USED WITH THIS DETAIL

FILE NAME = District 2 Standard	USER NAME = IDOT/District 2	DESIGNED -	REVISED - 8-27-13
		DRAWN -	REVISED - 12-07-10
	PLOT SCALE = 1.0000 '/ in.	CHECKED -	REVISED -
	PLOT DATE = Thu Nov 13 11:29:18 2014	DATE -	REVISED -

STATE OF ILLINOIS
DEPARTMENT OF TRANSPORTATION

REGION 2 / DISTRICT 2 STANDARD

SCALE: | SHEET NO. OF SHEETS | STA. TO STA.

F.A. RTE.	SECTION	COUNTY	TOTAL SHEETS	SHEET NO.
		CONTRACT NO.		
FED. ROAD DIST. NO.	ILLINOIS	FED. AID PROJECT		

40' SINGLE LANE MEDIAN CROSSOVER

(POSTED SPEED LIMIT 65 MPH OR HIGHER, WORK ZONE SPEED LIMIT 55 MPH)

TYPICAL SECTION

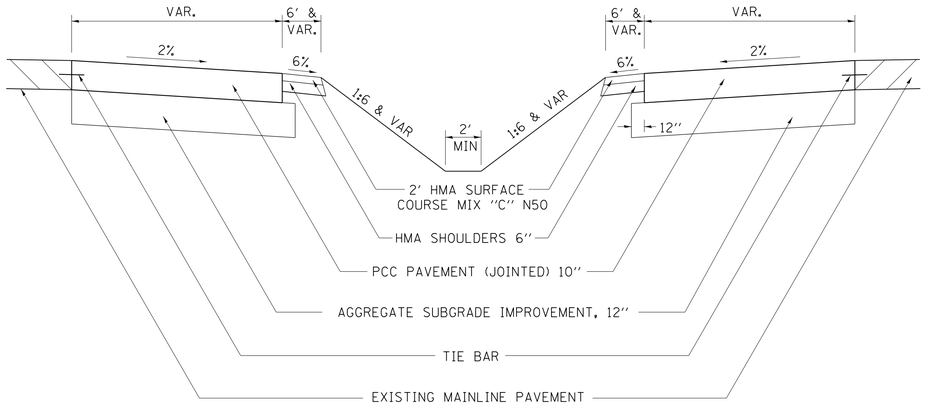

TABLE OF OFFSETS AND DROPS							
Distance feet from location station	0	77' (B)	100'	125'	150'	175'	183.23 (C)
Offsets feet from inside edge of pavement	20' (℄)	18'	14.79'	11.69'	8.98'	6.67'	6'
Drop feet from inside edge of pavement	0.4'	0.36'	0.3'	0.23'	0.18'	0.13'	0.12'

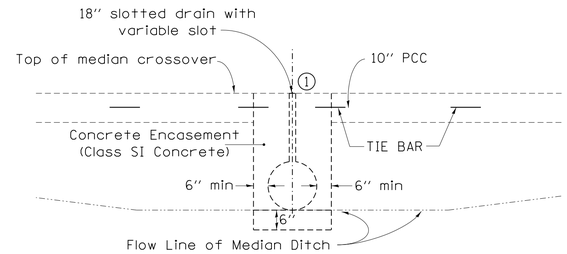

SECTION A–A

(USE TO MAINTAIN MEDIAN DRAINAGE THROUGH THE CROSSOVER)

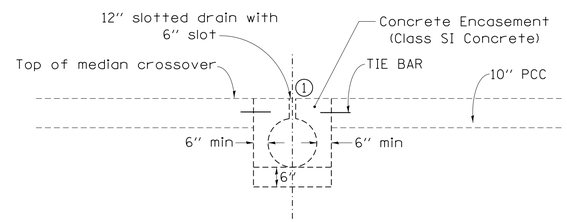

1 Duct tape or wood blocks shall be used to cover slotted drain during construction of crossover paving

SECTION A–A

(WHEN CROSSOVER IS AT MEDIAN HIGH POINT)

GENERAL NOTES

Construction of median crossover shall conform to the requirement of current Standard Specifications.

Slotted drain shall be constructed of 14 or 16 gauge corrugated metal roadway pipe modified to accommodate slotted drain as shown.

Pavement, subbase, & shoulder quantities are:

(1709.35 Sq. Yds.)	AGGREGATE SUBGRADE IMPROVEMENT, 12"
(1596.03 Sq. Yds.)	P.C.C. PAVEMENT, (JOINTED) 10"
(57.1 Tons)	2" HMA SURFACE COURSE, MIX "C", N50
(509.64 Sq. Yds.)	HMA SHOULDERS 6"

Elbows and Caps shall be considered included to the SLOTTED DRAIN 12" WITH 6" SLOT.

See District Standard 61.2 or 68.1 for details for the slotted drain.

See District Standard 86.1 for details for the beveled pipe & guard.

The crossover is designed using a 55mph design speed.

The end of the pipe guard shall be set where a minimum 1:4 front slope can be constructed from each side of pipe guard to the HMA shoulder.

The PCC Pavement (Jointed) 10" shall be constructed according to Section 420 of the Standard Specifications and Highway Standards 420001, 420101, & 420106

The PCC Pavement (Jointed) 10" shall be tied to adjacent existing concrete pavement and the concrete encasement for the slotted drain. The tie bars shall be No.6 bars 24" long @ 30" cts, and installed according to the applicable portions of Article 420.05 (b) of the Standard Specifications. The cost of the bars to be included in the cost of the PCC Pavement (Jointed) 10".

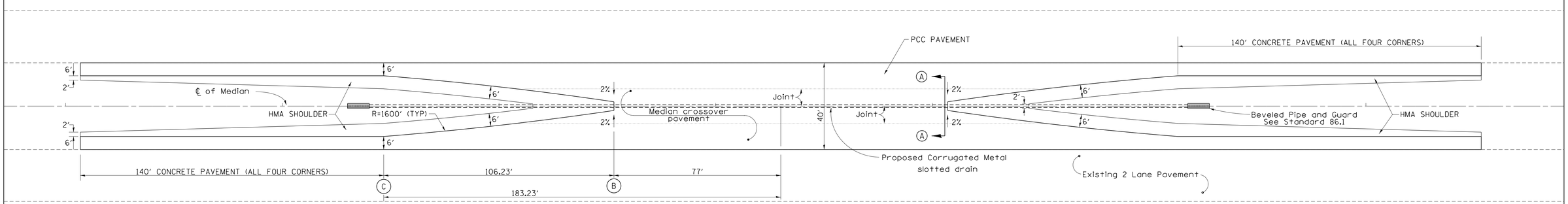

TYPICAL PLAN

Unless otherwise specified, when the median crossover is to be removed, the Contractor shall be required to saw full-depth along the shoulder line 6' from edge of pavement). The 6' adjacent to the edge of pavement shall remain in place and be used as shoulders. The cost of Sawing shall be included in the Pavement Removal.

Longitudinal joints shall be sawed at a max 12' width. All joints shall be sealed.

TRAFFIC CONTROL STANDARD 701416 IS TO BE USED WITH THIS DETAIL

FILE NAME = District 2 Standard	USER NAME = IDOT/District 2	DESIGNED -	REVISED - 6-27-14
		DRAWN -	REVISED - 8-27-13
	PLOT SCALE = 1.0000 '/ in.	CHECKED -	REVISED - 12-07-10
	PLOT DATE = Thu Nov 13 11:29:18 2014	DATE -	REVISED -

STATE OF ILLINOIS
DEPARTMENT OF TRANSPORTATION

REGION 2 / DISTRICT 2 STANDARD

SCALE: | SHEET NO. OF SHEETS | STA. TO STA.

F.A. RTE.	SECTION	COUNTY	TOTAL SHEETS	SHEET NO.
		CONTRACT NO.		
FED. ROAD DIST. NO.	ILLINOIS	FED. AID PROJECT		

50' SINGLE LANE MEDIAN CROSSOVER

(POSTED SPEED LIMIT 65 MPH OR HIGHER, WORK ZONE SPEED LIMIT 55 MPH)

TYPICAL SECTION

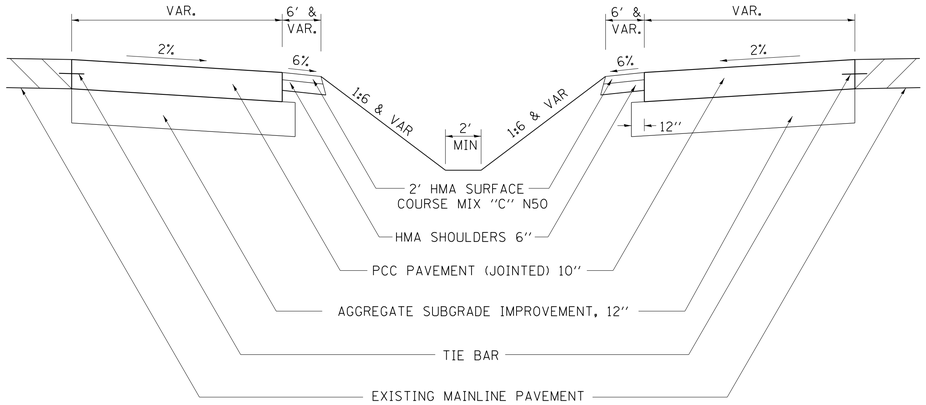

TABLE OF OFFSETS AND DROPS									
Distance feet from location station	0'	68' (B)	75'	100'	125'	150'	175'	200'	206.02' (C)
Offsets feet from inside edge of pavement	25' (℄)	23'	21.84'	17.97'	14.50'	11.43'	8.76'	6.49'	6'
Drop feet from inside edge of pavement	0.5'	0.46'	0.44'	0.36'	0.29'	0.23'	0.175'	0.13'	0.12'

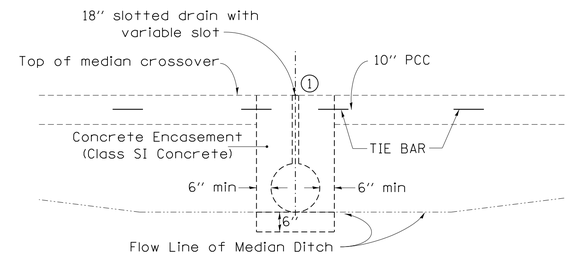

SECTION A–A

(USE TO MAINTAIN MEDIAN DRAINAGE THROUGH THE CROSSOVER)

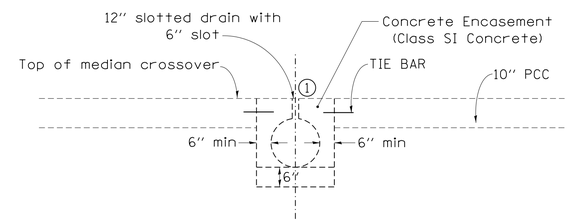

1 Duct tape or wood blocks shall be used to cover slotted drain during construction of crossover paving

SECTION A–A

(WHEN CROSSOVER IS AT MEDIAN HIGH POINT)

GENERAL NOTES

Construction of median crossover shall conform to the requirement of current Standard Specifications.

Slotted drain shall be constructed of 14 or 16 gauge corrugated metal roadway pipe modified to accommodate slotted drain as shown.

Pavement, subbase, & shoulder quantities are:

(2084.0 Sq. Yds.)	AGGREGATE SUBGRADE IMPROVEMENT, 12"
(1956.55 Sq. Yds.)	P.C.C. PAVEMENT, (JOINTED) 10"
(67.1 Tons)	2" HMA SURFACE COURSE, MIX "C", N50
(598.67 Sq. Yds.)	HMA SHOULDERS 6"

Elbows and Caps shall be considered included to the SLOTTED DRAIN 12" WITH 6" SLOT.

See District Standard 61.2 or 68.1 for details for the slotted drain.

See District Standard 86.1 for details for the beveled pipe & guard.

The crossover is designed using a 55mph design speed.

The end of the pipe guard shall be set where a minimum 1:4 front slope can be constructed from each side of pipe guard to the HMA shoulder.

The PCC Pavement (Jointed) 10" shall be constructed according to Section 420 of the Standard Specifications and Highway Standards 420001, 420101, & 420106

The PCC Pavement (Jointed) 10" shall be tied to adjacent existing concrete pavement and the concrete encasement for the slotted drain. The tie bars shall be No.6 bars 24" long @ 30" cts, and installed according to the applicable portions of Article 420.05 (b) of the Standard Specifications. The cost of the bars to be included in the cost of the PCC Pavement (Jointed) 10".

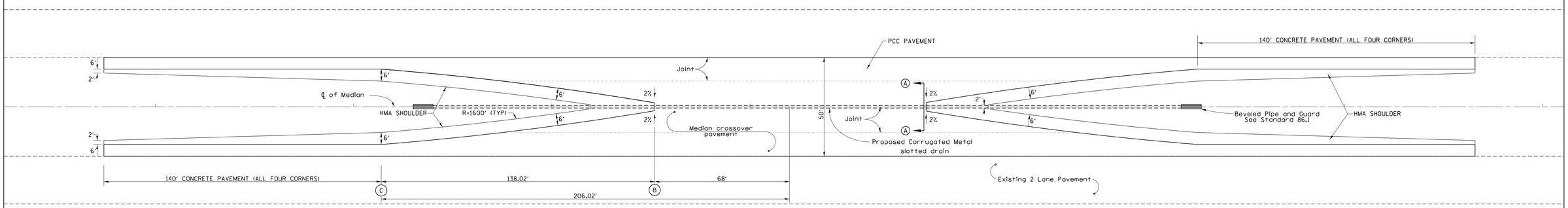

TYPICAL PLAN

Unless otherwise specified, when the median crossover is to be removed, the Contractor shall be required to saw full-depth along the shoulder line 6' from edge of pavement). The 6' adjacent to the edge of pavement shall remain in place and be used as shoulders. The cost of Sawing shall be included in the Pavement Removal.

Longitudinal joints shall be sawed at a max 12' width. All joints shall be sealed.

TRAFFIC CONTROL STANDARD 701416 IS TO BE USED WITH THIS DETAIL

FILE NAME = District 2 Standard	USER NAME = IDOT/District 2	DESIGNED -	REVISED - 6-27-14	STATE OF ILLINOIS DEPARTMENT OF TRANSPORTATION	REGION 2 / DISTRICT 2 STANDARD		F.A. RTE.	SECTION	COUNTY	TOTAL SHEETS	SHEET NO.
		DRAWN -	REVISED - 8-27-13								
	PLOT SCALE = 1.0000 '/ in.	CHECKED -	REVISED - 12-07-10						CONTRACT NO.		
	PLOT DATE = Thu Nov 13 11:29:19 2014	DATE -	REVISED -		SCALE:	SHEET NO. OF SHEETS	STA. TO STA.	FED. ROAD DIST. NO.	ILLINOIS	FED. AID PROJECT	

64' SINGLE LANE MEDIAN CROSSOVER

(POSTED SPEED LIMIT 65 MPH OR HIGHER, WORK ZONE SPEED LIMIT 55 MPH)

TYPICAL SECTION

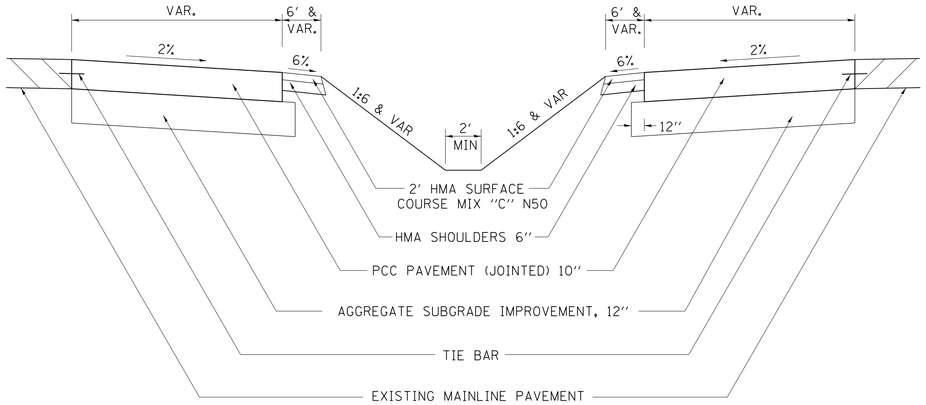

TABLE OF OFFSETS AND DROPS										
Distance feet from location station	0	60' Ⓑ	75'	100'	125'	150'	175'	200'	225'	236.83' Ⓒ
Offsets feet from inside edge of pavement	32' ℄	30'	27.18'	22.80'	18.84'	15.27	12.11	9.35'	6.98	6'
Drop feet from inside edge of pavement	0.64'	0.6'	0.54'	0.456'	0.377'	0.31'	0.24'	0.187'	0.139'	0.12'

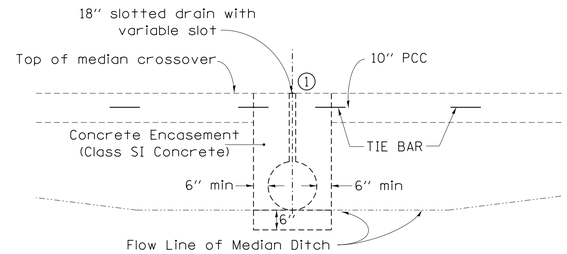

SECTION A–A

(USE TO MAINTAIN MEDIAN DRAINAGE THROUGH THE CROSSOVER)

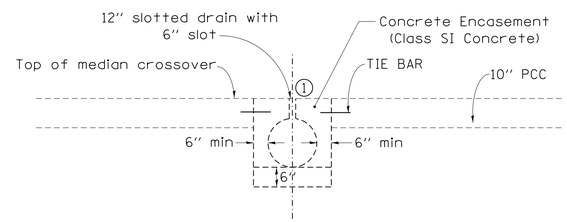

1 Duct tape or wood blocks shall be used to cover slotted drain during construction of crossover paving

SECTION A–A

(WHEN CROSSOVER IS AT MEDIAN HIGH POINT)

GENERAL NOTES

Construction of median crossover shall conform to the requirement of current Standard Specifications.

Slotted drain shall be constructed of 14 or 16 gauge corrugated metal roadway pipe modified to accommodate slotted drain as shown.

Pavement, subbase, & shoulder quantities are:

(2651.79 Sq. Yds.)	AGGREGATE SUBGRADE IMPROVEMENT, 12"
(2509.74 Sq. Yds.)	P.C.C. PAVEMENT, (JOINTED) 10"
(79.2 Tons)	2" HMA SURFACE COURSE, MIX "C", N50
(707.03 Sq. Yds.)	HMA SHOULDERS 6"

Elbows and Caps shall be considered included to the SLOTTED DRAIN 12" WITH 6" SLOT.

See District Standard 61.2 or 68.1 for details for the slotted drain.

See District Standard 86.1 for details for the beveled pipe & guard.

The crossover is designed using a 55mph design speed.

The end of the pipe guard shall be set where a minimum 1:4 front slope can be constructed from each side of pipe guard to the HMA shoulder.

The PCC Pavement (Jointed) 10" shall be constructed according to Section 420 of the Standard Specifications and Highway Standards 420001, 420101, & 420106

The PCC Pavement (Jointed) 10" shall be tied to adjacent existing concrete pavement and the concrete encasement for the slotted drain. The tie bars shall be No.6 bars 24" long @ 30" cts, and installed according to the applicable portions of Article 420.05 (b) of the Standard Specifications. The cost of the bars to be included in the cost of the PCC Pavement (Jointed) 10".

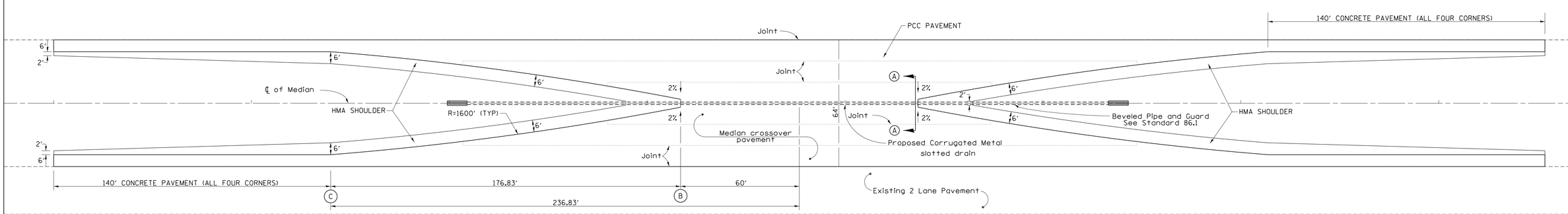

TYPICAL PLAN

Unless otherwise specified, when the median crossover is to be removed, the Contractor shall be required to saw full-depth along the shoulder line 6' from edge of pavement). The 6' adjacent to the edge of pavement shall remain in place and be used as shoulders. The cost of Sawing shall be included in the Pavement Removal.

Longitudinal joints shall be sawed at a max 12' width. All joints shall be sealed.

TRAFFIC CONTROL STANDARD 701416 IS TO BE USED WITH THIS DETAIL

FILE NAME = District 2 Standard	USER NAME = IDOT/District 2	DESIGNED -	REVISED - 6-27-14	STATE OF ILLINOIS DEPARTMENT OF TRANSPORTATION	REGION 2 / DISTRICT 2 STANDARD		F.A. RTE.	SECTION	COUNTY	TOTAL SHEETS	SHEET NO.
		DRAWN -	REVISED - 8-27-13								
	PLOT SCALE = 1.0000 '/ in.	CHECKED -	REVISED - 12-07-10						CONTRACT NO.		
	PLOT DATE = Thu Nov 13 11:29:20 2014	DATE -	REVISED -		SCALE:	SHEET NO. OF SHEETS	STA. TO STA.	FED. ROAD DIST. NO.	ILLINOIS	FED. AID PROJECT	

88' SINGLE LANE MEDIAN CROSSOVER

(POSTED SPEED LIMIT 65 MPH OR HIGHER, WORK ZONE SPEED LIMIT 55 MPH)

TYPICAL SECTION

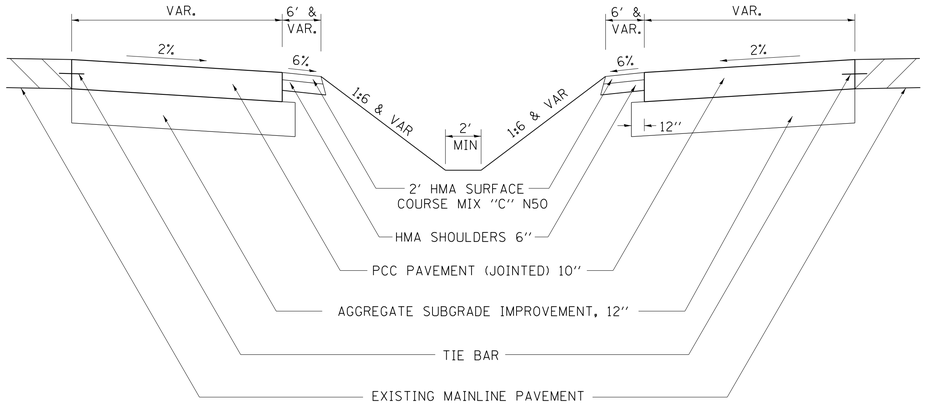

TABLE OF OFFSETS AND DROPS												
Distance feet from location station	0	50' (B)	75'	100'	125'	150'	175'	200'	225'	250'	275'	283.50' (C)
Offsets feet from inside edge of pavement	44' (℄)	42'	36.44'	31.30'	26.57'	22.25'	18.34'	14.83'	11.72'	9.01'	6.70'	6'
Drop feet from inside edge of pavement	0.88'	0.84'	0.73'	0.63'	0.53'	0.43'	0.37'	0.30'	0.23'	0.18'	0.13'	0.12'

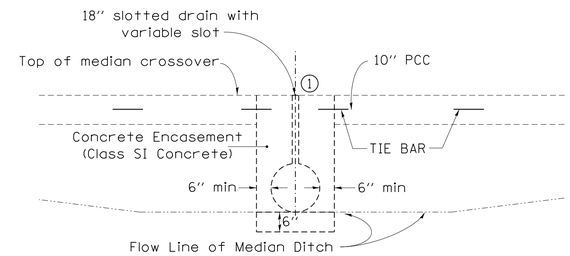

SECTION A–A

(USE TO MAINTAIN MEDIAN DRAINAGE THROUGH THE CROSSOVER)

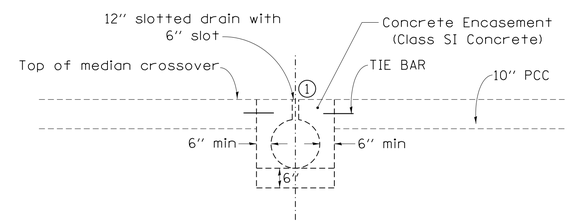

1 Duct tape or wood blocks shall be used to cover slotted drain during construction of crossover paving

SECTION A–A

(WHEN CROSSOVER IS AT MEDIAN HIGH POINT)

GENERAL NOTES

Construction of median crossover shall conform to the requirement of current Standard Specifications.

Slotted drain shall be constructed of 14 or 16 gauge corrugated metal roadway pipe modified to accommodate slotted drain as shown.

Pavement, subbase, & shoulder quantities are:

(3704.06 Sq. Yds.)	AGGREGATE SUBGRADE IMPROVEMENT, 12"
(3535.98 Sq. Yds.)	P.C.C. PAVEMENT, (JOINTED) 10"
(96.79 Tons)	2" HMA SURFACE COURSE, MIX "C", N50
(864.23 Sq. Yds.)	HMA SHOULDERS 6"

Elbows and Caps shall be considered included to the SLOTTED DRAIN 12" WITH 6" SLOT.

See District Standard 61.2 or 68.1 for details for the slotted drain.

See District Standard 86.1 for details for the beveled pipe & guard.

The crossover is designed using a 55mph design speed.

The end of the pipe guard shall be set where a minimum 1:4 front slope can be constructed from each side of pipe guard to the HMA shoulder.

The PCC Pavement (Jointed) 10" shall be constructed according to Section 420 of the Standard Specifications and Highway Standards 420001, 420101, & 420106

The PCC Pavement (Jointed) 10" shall be tied to adjacent existing concrete pavement and the concrete encasement for the slotted drain. The tie bars shall be No.6 bars 24" long @ 30" cts, and installed according to the applicable portions of Article 420.05 (b) of the Standard Specifications. The cost of the bars to be included in the cost of the PCC Pavement (Jointed) 10".

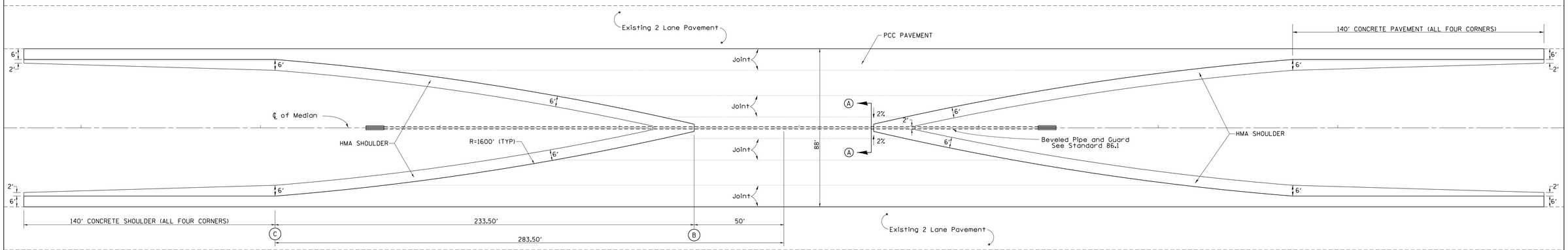

TYPICAL PLAN

Unless otherwise specified, when the median crossover is to be removed, the Contractor shall be required to saw full-depth along the shoulder line 6' from edge of pavement). The 6' adjacent to the edge of pavement shall remain in place and be used as shoulders. The cost of Sawing shall be included in the Pavement Removal.

Longitudinal joints shall be sawed at a max 12' width. All joints shall be sealed.

TRAFFIC CONTROL STANDARD 701416 IS TO BE USED WITH THIS DETAIL

FILE NAME = District 2 Standard	USER NAME = IDOT/District 2	DESIGNED -	REVISED - 6-27-14	STATE OF ILLINOIS DEPARTMENT OF TRANSPORTATION	REGION 2 / DISTRICT 2 STANDARD	F.A. RTE.	SECTION	COUNTY	TOTAL SHEETS	SHEET NO.
		DRAWN -	REVISED - 8-27-13							
	PLOT SCALE = 1.0000 ' / in.	CHECKED -	REVISED - 12-07-10					CONTRACT NO.		
	PLOT DATE = Thu Nov 13 11:29:20 2014	DATE -	REVISED -		SCALE: SHEET NO. OF SHEETS STA. TO STA.	FED. ROAD DIST. NO.	ILLINOIS	FED. AID PROJECT		

40' TWO LANE MEDIAN CROSSOVER

(POSTED SPEED LIMIT 55 MPH, WORK ZONE SPEED LIMIT 45 MPH)

TYPICAL SECTION

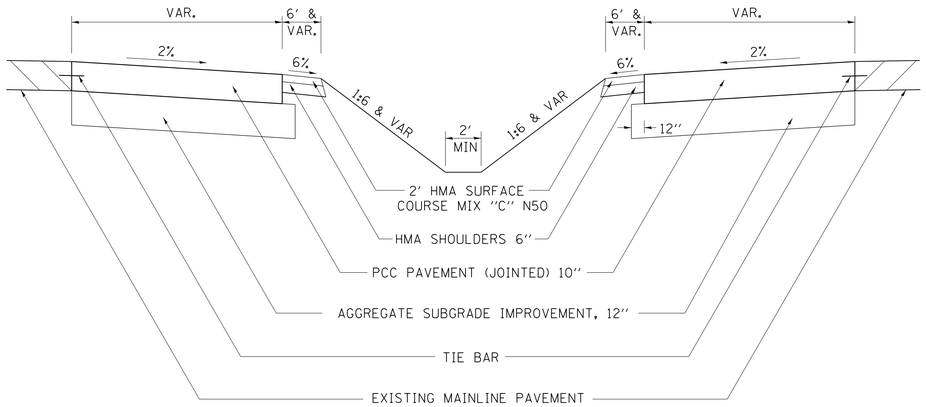

TABLE OF OFFSETS AND DROPS						
Distance feet from location station	0	76.95' (B)	100'	125'	150'	168.69' (C)
Offsets feet from inside edge of pavement	20' (℄)	18'	14.22'	10.70'	7.79'	6.00'
Drop feet from inside edge of pavement	0.4'	0.36'	0.28'	0.21'	0.16'	0.12'

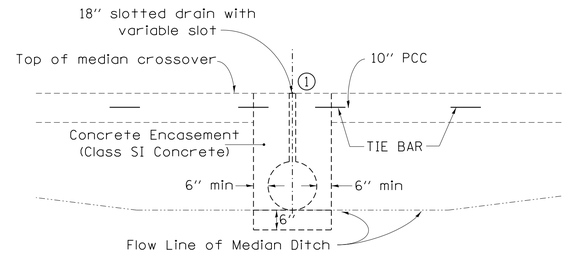

SECTION A–A

(USE TO MAINTAIN MEDIAN DRAINAGE THROUGH THE CROSSOVER)

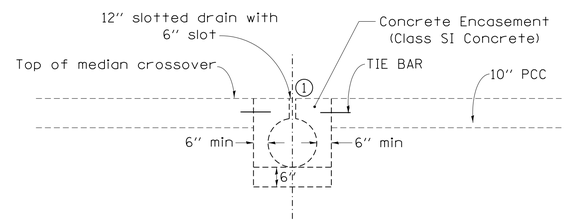

1 Duct tape or wood blocks shall be used to cover slotted drain during construction of crossover paving

SECTION A–A

(WHEN CROSSOVER IS AT MEDIAN HIGH POINT)

GENERAL NOTES

Construction of median crossover shall conform to the requirement of current Standard Specifications.

Slotted drain shall be constructed of 14 or 16 gauge corrugated metal roadway pipe modified to accommodate slotted drain as shown.

Pavement, subbase, & shoulder quantities are:

(1685.28 Sq. Yds.)	AGGREGATE SUBGRADE IMPROVEMENT, 12"
(1572.43 Sq. Yds.)	P.C.C. PAVEMENT, (JOINTED) 10"
(57.28 Tons)	2" HMA SURFACE COURSE, MIX "C", N50
(511.45 Sq. Yds.)	HMA SHOULDERS 6"

Elbows and Caps shall be considered included to the SLOTTED DRAIN 12" WITH 6" SLOT.

See District Standard 61.2 or 68.1 for details for the slotted drain.

See District Standard 86.1 for details for the beveled pipe & guard.

The crossover is designed using a 45mph design speed.

The end of the pipe guard shall be set where a minimum 1:4 front slope can be constructed from each side of pipe guard to the HMA shoulder.

The PCC Pavement (Jointed) 10" shall be constructed according to Section 420 of the Standard Specifications and Highway Standards 420001, 420101, & 420106

The PCC Pavement (Jointed) 10" shall be tied to adjacent existing concrete pavement and the concrete encasement for the slotted drain. The tie bars shall be No.6 bars 24" long @ 30" cts, and installed according to the applicable portions of Article 420.05 (b) of the Standard Specifications. The cost of the bars to be included in the cost of the PCC Pavement (Jointed) 10".

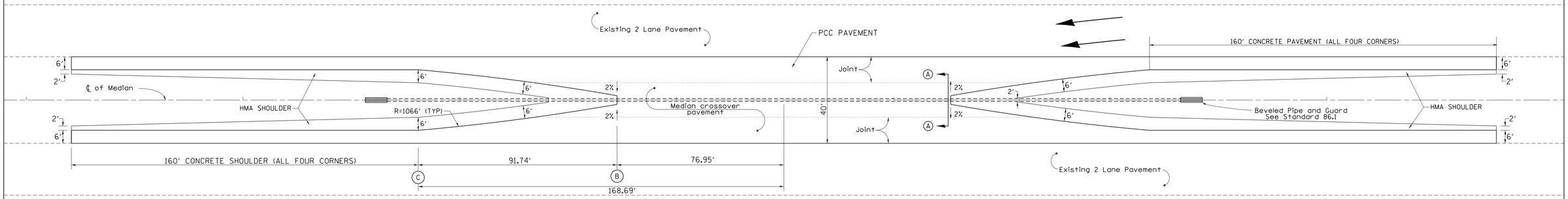

TYPICAL PLAN

Unless otherwise specified, when the median crossover is to be removed, the Contractor shall be required to saw full-depth along the shoulder line 6' from edge of pavement). The 6' adjacent to the edge of pavement shall remain in place and be used as shoulders. The cost of Sawing shall be included in the Pavement Removal.

Longitudinal joints shall be sawed at a max 12' width. All joints shall be sealed.

TRAFFIC CONTROL STANDARD 701416 IS TO BE USED WITH THIS DETAIL

FILE NAME = District 2 Standard	USER NAME = IDOT/District 2	DESIGNED -	REVISED - 8-27-13	STATE OF ILLINOIS DEPARTMENT OF TRANSPORTATION	REGION 2 / DISTRICT 2 STANDARD	F.A. RTE.	SECTION	COUNTY	TOTAL SHEETS / SHEET NO.
		DRAWN -	REVISED - 4-04-11						
	PLOT SCALE = 1.0000 '/ in.	CHECKED -	REVISED -					CONTRACT NO.	
	PLOT DATE = Thu Nov 13 11:29:21 2014	DATE -	REVISED -		SCALE: SHEET NO. OF SHEETS STA. TO STA.	FED. ROAD DIST. NO.	ILLINOIS	FED. AID PROJECT	

50' TWO LANE MEDIAN CROSSOVER

(POSTED SPEED LIMIT 55 MPH, WORK ZONE SPEED LIMIT 45 MPH)

TYPICAL SECTION

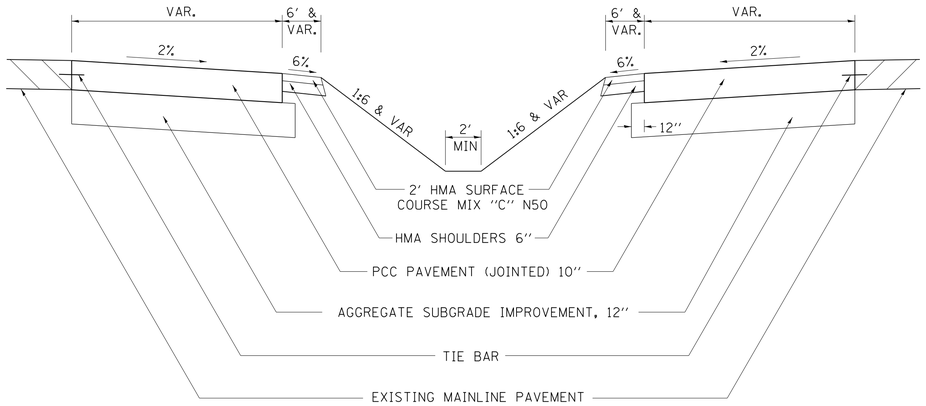

TABLE OF OFFSETS AND DROPS								
Distance feet from location station	0	69.72' Ⓑ	75'	100'	125'	150'	175'	188.01' Ⓒ
Offsets feet from inside edge of pavement	25' ℄	23'	21.95'	17.35'	13.37'	9.99'	7.21'	6.00'
Drop feet from inside edge of pavement	0.5'	0.46'	0.44'	0.35'	0.27'	0.20'	0.14'	0.12'

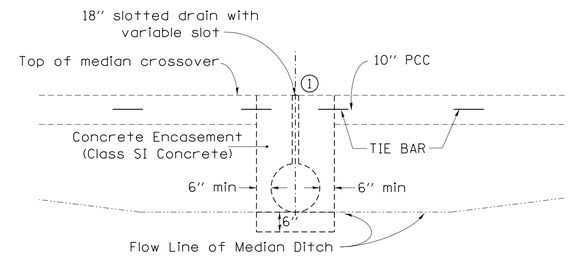

SECTION A–A

(USE TO MAINTAIN MEDIAN DRAINAGE THROUGH THE CROSSOVER)

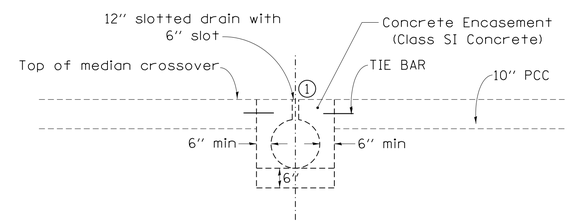

① Duct tape or wood blocks shall be used to cover slotted drain during construction of crossover paving

SECTION A–A

(WHEN CROSSOVER IS AT MEDIAN HIGH POINT)

GENERAL NOTES

Construction of median crossover shall conform to the requirement of current Standard Specifications.

Slotted drain shall be constructed of 14 or 16 gauge corrugated metal roadway pipe modified to accommodate slotted drain as shown.

Pavement, subbase, & shoulder quantities are:

(2029.23 Sq. Yds.)	AGGREGATE SUBGRADE IMPROVEMENT, 12"
(1904.29 Sq. Yds.)	P.C.C. PAVEMENT, (JOINTED) 10"
(65.64 Tons)	2" HMA SURFACE COURSE, MIX "C", N50
(586.07 Sq. Yds.)	HMA SHOULDERS 6"

Elbows and Caps shall be considered included to the SLOTTED DRAIN 12" WITH 6" SLOT.

See District Standard 61.2 or 68.1 for details for the slotted drain.

See District Standard 86.1 for details for the beveled pipe & guard.

The crossover is designed using a 45mph design speed.

The end of the pipe guard shall be set where a minimum 1:4 front slope can be constructed from each side of pipe guard to the HMA shoulder.

The PCC Pavement (Jointed) 10" shall be constructed according to Section 420 of the Standard Specifications and Highway Standards 420001, 420101, & 420106

The PCC Pavement (Jointed) 10" shall be tied to adjacent existing concrete pavement and the concrete encasement for the slotted drain. The tie bars shall be No.6 bars 24" long @ 30" cts, and installed according to the applicable portions of Article 420.05 (b) of the Standard Specifications. The cost of the bars to be included in the cost of the PCC Pavement (Jointed) 10".

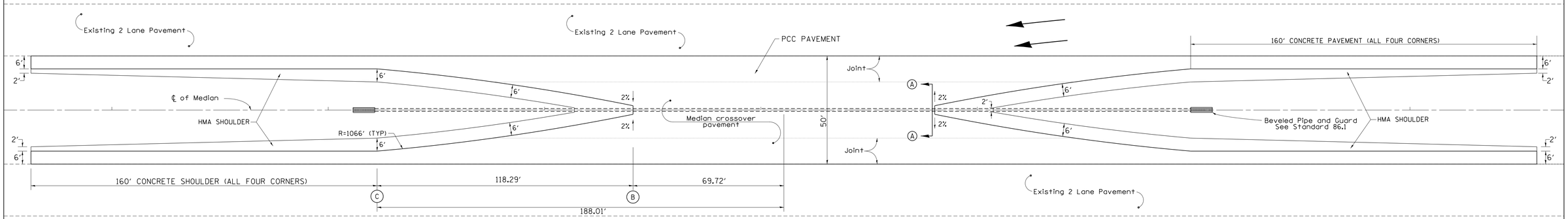

TYPICAL PLAN

Unless otherwise specified, when the median crossover is to be removed, the Contractor shall be required to saw full-depth along the shoulder line 6' from edge of pavement). The 6' adjacent to the edge of pavement shall remain in place and be used as shoulders. The cost of Sawing shall be included in the Pavement Removal.

Longitudinal joints shall be sawed at a max 12' width. All joints shall be sealed.

TRAFFIC CONTROL STANDARD 701416 IS TO BE USED WITH THIS DETAIL

FILE NAME = District 2 Standard	USER NAME = IDOT/District 2	DESIGNED -	REVISED - 8-27-13	STATE OF ILLINOIS DEPARTMENT OF TRANSPORTATION	REGION 2 / DISTRICT 2 STANDARD	F.A. RTE.	SECTION	COUNTY	TOTAL SHEETS / SHEET NO.
		DRAWN -	REVISED - 4-04-11						
	PLOT SCALE = 1.0000 '/ in.	CHECKED -	REVISED -					CONTRACT NO.	
	PLOT DATE = Thu Nov 13 11:29:22 2014	DATE -	REVISED -		SCALE: SHEET NO. OF SHEETS STA. TO STA.	FED. ROAD DIST. NO.	ILLINOIS	FED. AID PROJECT	

64' TWO LANE MEDIAN CROSSOVER

(POSTED SPEED LIMIT 55 MPH, WORK ZONE SPEED LIMIT 45 MPH)

TYPICAL SECTION

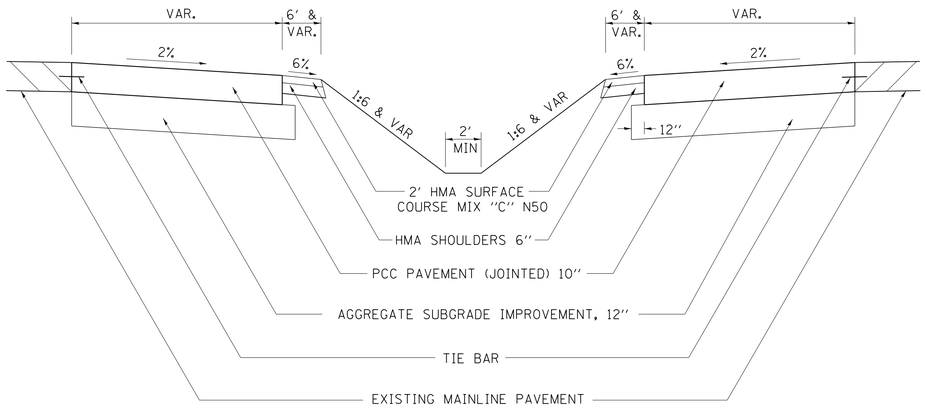

TABLE OF OFFSETS AND DROPS									
Distance feet from location station	0	62.41' (B)	75'	100'	125'	150'	175'	200'	212.87' (C)
Offsets feet from inside edge of pavement	32' (℄)	30'	27.14'	21.92'	17.33'	13.35'	9.97'	7.20'	6.00'
Drop feet from inside edge of pavement	0.64'	0.60'	0.54'	0.44'	0.35'	0.27'	0.20'	0.14'	0.12'

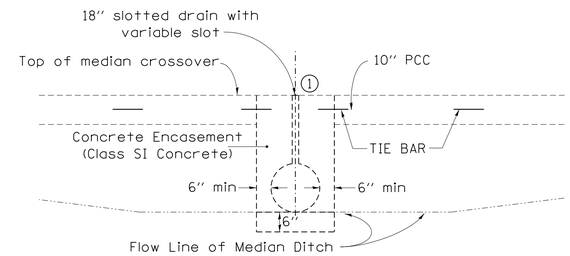

SECTION A–A

(USE TO MAINTAIN MEDIAN DRAINAGE THROUGH THE CROSSOVER)

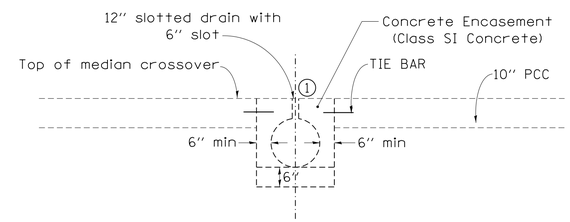

1 Duct tape or wood blocks shall be used to cover slotted drain during construction of crossover paving

SECTION A–A

(WHEN CROSSOVER IS AT MEDIAN HIGH POINT)

GENERAL NOTES

Construction of median crossover shall conform to the requirement of current Standard Specifications.

Slotted drain shall be constructed of 14 or 16 gauge corrugated metal roadway pipe modified to accommodate slotted drain as shown.

Pavement, subbase, & shoulder quantities are:

(2534.76 Sq. Yds.)	AGGREGATE SUBGRADE IMPROVEMENT, 12"
(2394.89 Sq. Yds.)	P.C.C. PAVEMENT, (JOINTED) 10"
(75.73 Tons)	2" HMA SURFACE COURSE, MIX "C", N50
(676.15 Sq. Yds.)	HMA SHOULDERS 6"

Elbows and Caps shall be considered included to the SLOTTED DRAIN 12" WITH 6" SLOT.

See District Standard 61.2 or 68.1 for details for the slotted drain.

See District Standard 86.1 for details for the beveled pipe & guard.

The crossover is designed using a 45mph design speed.

The end of the pipe guard shall be set where a minimum 1:4 front slope can be constructed from each side of pipe guard to the HMA shoulder.

The PCC Pavement (Jointed) 10" shall be constructed according to Section 420 of the Standard Specifications and Highway Standards 420001, 420101, & 420106

The PCC Pavement (Jointed) 10" shall be tied to adjacent existing concrete pavement and the concrete encasement for the slotted drain. The tie bars shall be No.6 bars 24" long @ 30" cts, and installed according to the applicable portions of Article 420.05 (b) of the Standard Specifications. The cost of the bars to be included in the cost of the PCC Pavement (Jointed) 10".

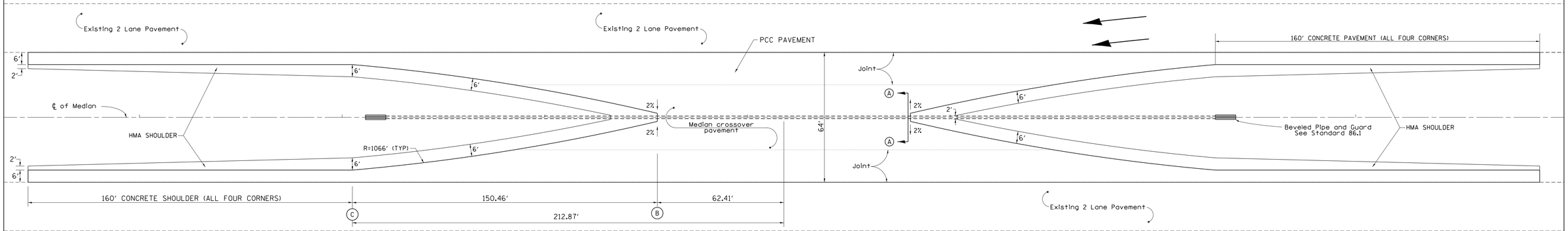

TYPICAL PLAN

Unless otherwise specified, when the median crossover is to be removed, the Contractor shall be required to saw full-depth along the shoulder line 6' from edge of pavement). The 6' adjacent to the edge of pavement shall remain in place and be used as shoulders. The cost of Sawing shall be included in the Pavement Removal.

Longitudinal joints shall be sawed at a max 12' width. All joints shall be sealed.

TRAFFIC CONTROL STANDARD 701416 IS TO BE USED WITH THIS DETAIL

FILE NAME = District 2 Standard	USER NAME = IDOT/District 2	DESIGNED -	REVISED - 8-27-13	STATE OF ILLINOIS DEPARTMENT OF TRANSPORTATION	REGION 2 / DISTRICT 2 STANDARD	F.A. RTE.	SECTION	COUNTY	TOTAL SHEETS / SHEET NO.
		DRAWN -	REVISED - 4-04-11						
	PLOT SCALE = 1.0000 '/ in.	CHECKED -	REVISED -					CONTRACT NO.	
	PLOT DATE = Thu Nov 13 11:29:22 2014	DATE -	REVISED -		SCALE: SHEET NO. OF SHEETS STA. TO STA.	FED. ROAD DIST. NO.	ILLINOIS	FED. AID PROJECT	

40' TWO LANE MEDIAN CROSSOVER

(POSTED SPEED LIMIT 65 MPH OR HIGHER, WORK ZONE SPEED LIMIT 55 MPH)

TYPICAL SECTION

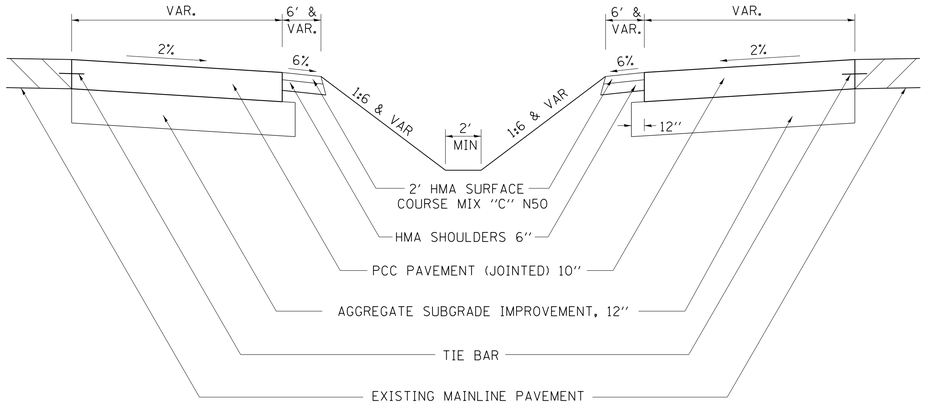

TABLE OF OFFSETS AND DROPS							
Distance feet from location station	0	100.33' (B)	125'	150'	175'	200'	220.57' (C)
Offsets feet from inside edge of pavement	20' (℄)	18'	14.88'	12.07'	9.60'	7.48'	6.00'
Drop feet from inside edge of pavement	0.40'	0.36'	0.30'	0.24'	0.19'	0.15'	0.12'

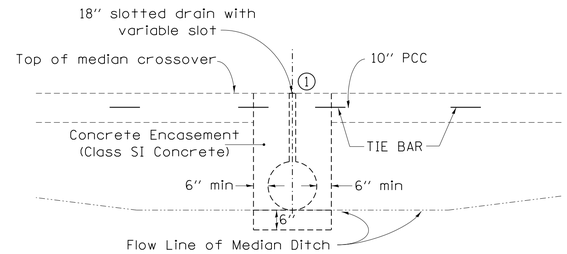

SECTION A–A

(USE TO MAINTAIN MEDIAN DRAINAGE THROUGH THE CROSSOVER)

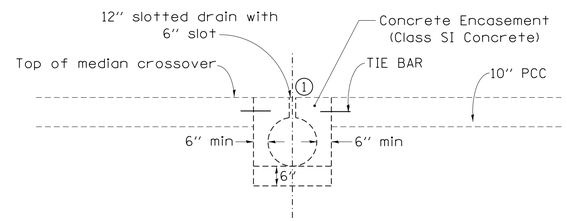

(1) Duct tape or wood blocks shall be used to cover slotted drain during construction of crossover paving

SECTION A–A

(WHEN CROSSOVER IS AT MEDIAN HIGH POINT)

GENERAL NOTES

Construction of median crossover shall conform to the requirement of current Standard Specifications.

Slotted drain shall be constructed of 14 or 16 gauge corrugated metal roadway pipe modified to accommodate slotted drain as shown.

Pavement, subbase, & shoulder quantities are:

(2142.56 Sq. Yds.)	AGGREGATE SUBGRADE IMPROVEMENT, 12"
(2003.87 Sq. Yds.)	P.C.C. PAVEMENT, (JOINTED) 10"
(71.01 Tons)	2" HMA SURFACE COURSE, MIX "C", N50
(634.04 Sq. Yds.)	HMA SHOULDERS 6"

Elbows and Caps shall be considered included to the SLOTTED DRAIN 12" WITH 6" SLOT.

See District Standard 61.2 or 68.1 for details for the slotted drain.

See District Standard 86.1 for details for the beveled pipe & guard.

The crossover is designed using a 55mph design speed.

The end of the pipe guard shall be set where a minimum 1:4 front slope can be constructed from each side of pipe guard to the HMA shoulder.

The PCC Pavement (Jointed) 10" shall be constructed according to Section 420 of the Standard Specifications and Highway Standards 420001, 420101, & 420106

The PCC Pavement (Jointed) 10" shall be tied to adjacent existing concrete pavement and the concrete encasement for the slotted drain. The tie bars shall be No.6 bars 24" long @ 30" cts, and installed according to the applicable portions of Article 420.05 (b) of the Standard Specifications. The cost of the bars to be included in the cost of the PCC Pavement (Jointed) 10".

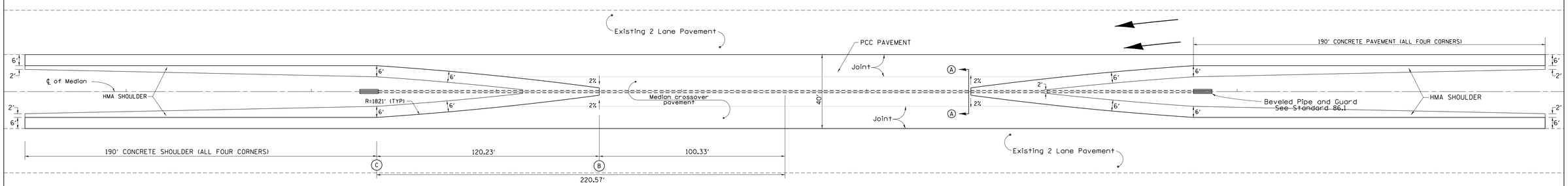

TYPICAL PLAN

Unless otherwise specified, when the median crossover is to be removed, the Contractor shall be required to saw full-depth along the shoulder line 6' from edge of pavement). The 6' adjacent to the edge of pavement shall remain in place and be used as shoulders. The cost of Sawing shall be included in the Pavement Removal.

Longitudinal joints shall be sawed at a max 12' width. All joints shall be sealed.

TRAFFIC CONTROL STANDARD 701416 IS TO BE USED WITH THIS DETAIL

FILE NAME = District 2 Standard	USER NAME = IDOT/District 2	DESIGNED -	REVISED - 6-27-14	STATE OF ILLINOIS DEPARTMENT OF TRANSPORTATION	REGION 2 / DISTRICT 2 STANDARD	F.A. RTE.	SECTION	COUNTY	TOTAL SHEETS / SHEET NO.
		DRAWN -	REVISED - 8-27-13						
	PLOT SCALE = 1.0000 ' / in.	CHECKED -	REVISED - 4-04-11					CONTRACT NO.	
	PLOT DATE = Thu Nov 13 11:29:23 2014	DATE -	REVISED -		SCALE: SHEET NO. OF SHEETS STA. TO STA.	FED. ROAD DIST. NO.	ILLINOIS	FED. AID PROJECT	

50' TWO LANE MEDIAN CROSSOVER

(POSTED SPEED LIMIT 65 MPH OR HIGHER, WORK ZONE SPEED LIMIT 55 MPH)

TYPICAL SECTION

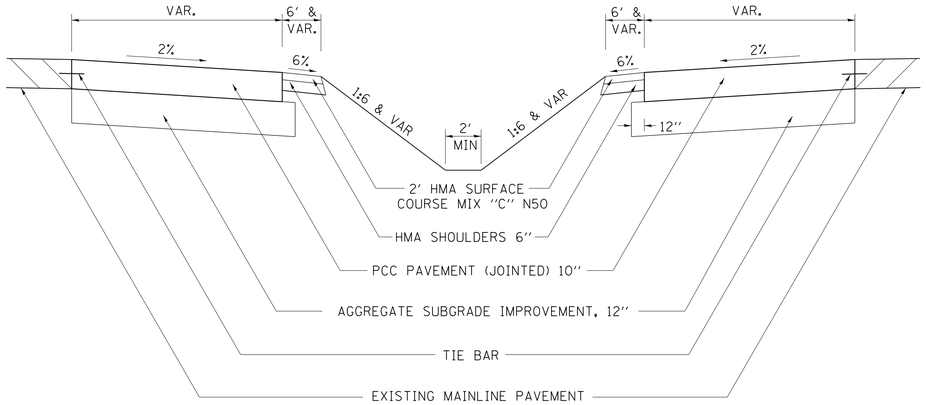

TABLE OF OFFSETS AND DROPS									
Distance feet from location station	0	90.88' Ⓑ	100'	125'	150'	175'	200'	225'	246' Ⓒ
Offsets feet from inside edge of pavement	25' ℄	23'	21.63'	18.10'	14.93'	12.11'	9.64'	7.52'	6.00'
Drop feet from inside edge of pavement	0.50'	0.46'	0.43'	0.36'	0.30'	0.24'	0.19'	0.15'	0.12'

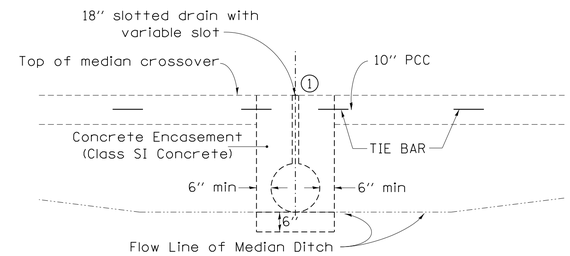

SECTION A–A

(USE TO MAINTAIN MEDIAN DRAINAGE THROUGH THE CROSSOVER)

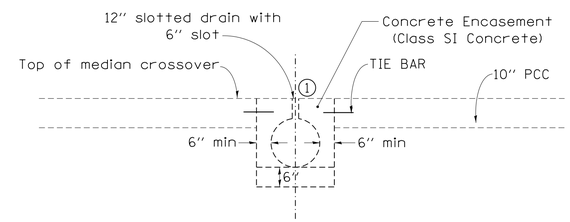

① Duct tape or wood blocks shall be used to cover slotted drain during construction of crossover paving

SECTION A–A

(WHEN CROSSOVER IS AT MEDIAN HIGH POINT)

GENERAL NOTES

Construction of median crossover shall conform to the requirement of current Standard Specifications.

Slotted drain shall be constructed of 14 or 16 gauge corrugated metal roadway pipe modified to accommodate slotted drain as shown.

Pavement, subbase, & shoulder quantities are:

(2593.23 Sq. Yds.)	AGGREGATE SUBGRADE IMPROVEMENT, 12"
(2438.79 Sq. Yds.)	P.C.C. PAVEMENT, (JOINTED) 10"
(81.92 Tons)	2" HMA SURFACE COURSE, MIX "C", N50
(731.46 Sq. Yds.)	HMA SHOULDERS 6"

Elbows and Caps shall be considered included to the SLOTTED DRAIN 12" WITH 6" SLOT.

See District Standard 61.2 or 68.1 for details for the slotted drain.

See District Standard 86.1 for details for the beveled pipe & guard.

The crossover is designed using a 55mph design speed.

The end of the pipe guard shall be set where a minimum 1:4 front slope can be constructed from each side of pipe guard to the HMA shoulder.

The PCC Pavement (Jointed) 10" shall be constructed according to Section 420 of the Standard Specifications and Highway Standards 420001, 420101, & 420106

The PCC Pavement (Jointed) 10" shall be tied to adjacent existing concrete pavement and the concrete encasement for the slotted drain. The tie bars shall be No.6 bars 24" long @ 30" cts, and installed according to the applicable portions of Article 420.05 (b) of the Standard Specifications. The cost of the bars to be included in the cost of the PCC Pavement (Jointed) 10".

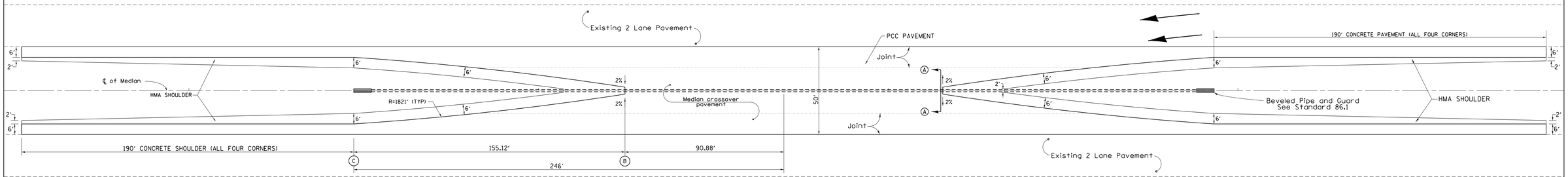

TYPICAL PLAN

Unless otherwise specified, when the median crossover is to be removed, the Contractor shall be required to saw full-depth along the shoulder line 6' from edge of pavement). The 6' adjacent to the edge of pavement shall remain in place and be used as shoulders. The cost of Sawing shall be included in the Pavement Removal.

Longitudinal joints shall be sawed at a max 12' width. All joints shall be sealed.

TRAFFIC CONTROL STANDARD 701416 IS TO BE USED WITH THIS DETAIL

FILE NAME = District 2 Standard	USER NAME = IDOT/District 2	DESIGNED -	REVISED - 6-27-14	STATE OF ILLINOIS DEPARTMENT OF TRANSPORTATION	REGION 2 / DISTRICT 2 STANDARD		F.A. RTE.	SECTION	COUNTY	TOTAL SHEETS	SHEET NO.
		DRAWN -	REVISED - 8-27-13								
	PLOT SCALE = 1.0000 '/ in.	CHECKED -	REVISED - 4-04-11						CONTRACT NO.		
	PLOT DATE = Thu Nov 13 11:29:24 2014	DATE -	REVISED -		SCALE:	SHEET NO. OF SHEETS	STA. TO STA.	FED. ROAD DIST. NO.	ILLINOIS	FED. AID PROJECT	

64' TWO LANE MEDIAN CROSSOVER

(POSTED SPEED LIMIT 65 MPH OR HIGHER, WORK ZONE SPEED LIMIT 55 MPH)

TYPICAL SECTION

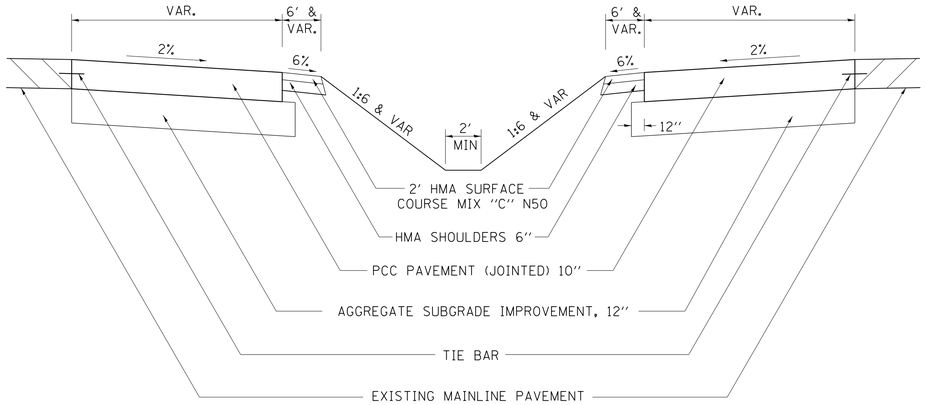

TABLE OF OFFSETS AND DROPS											
Distance feet from location station	0	81.32' Ⓑ	100'	125'	150'	175'	200'	225'	250'	275'	278.80' Ⓒ
Offsets feet from inside edge of pavement	32' ℄	30'	26.79'	22.80'	19.16'	15.88'	12.95'	10.37'	8.14'	6.26'	6.00'
Drop feet from inside edge of pavement	0.64'	0.60'	0.54'	0.46'	0.38'	0.32'	0.26'	0.21'	0.16'	0.13'	0.12'

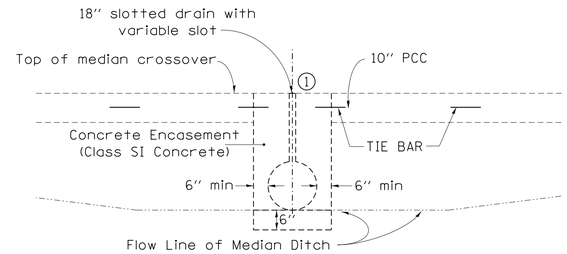

SECTION A–A

(USE TO MAINTAIN MEDIAN DRAINAGE THROUGH THE CROSSOVER)

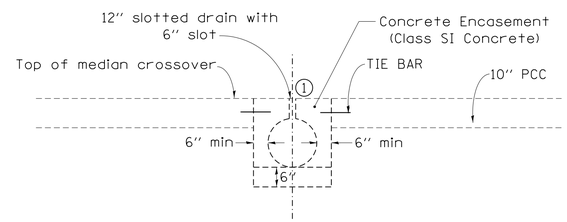

① Duct tape or wood blocks shall be used to cover slotted drain during construction of crossover paving

SECTION A–A

(WHEN CROSSOVER IS AT MEDIAN HIGH POINT)

GENERAL NOTES

Construction of median crossover shall conform to the requirement of current Standard Specifications.

Slotted drain shall be constructed of 14 or 16 gauge corrugated metal roadway pipe modified to accommodate slotted drain as shown.

Pavement, subbase, & shoulder quantities are:

(3256.59 Sq. Yds.)	AGGREGATE SUBGRADE IMPROVEMENT, 12"
(3082.80 Sq. Yds.)	P.C.C. PAVEMENT, (JOINTED) 10"
(95.09 Tons)	2" HMA SURFACE COURSE, MIX "C", N50
(848.99 Sq. Yds.)	HMA SHOULDERS 6"

Elbows and Caps shall be considered included to the SLOTTED DRAIN 12" WITH 6" SLOT.

See District Standard 61.2 or 68.1 for details for the slotted drain.

See District Standard 86.1 for details for the beveled pipe & guard.

The crossover is designed using a 55mph design speed.

The end of the pipe guard shall be set where a minimum 1:4 front slope can be constructed from each side of pipe guard to the HMA shoulder.

The PCC Pavement (Jointed) 10" shall be constructed according to Section 420 of the Standard Specifications and Highway Standards 420001, 420101, & 420106

The PCC Pavement (Jointed) 10" shall be tied to adjacent existing concrete pavement and the concrete encasement for the slotted drain. The tie bars shall be No.6 bars 24" long @ 30" cts, and installed according to the applicable portions of Article 420.05 (b) of the Standard Specifications. The cost of the bars to be included in the cost of the PCC Pavement (Jointed) 10".

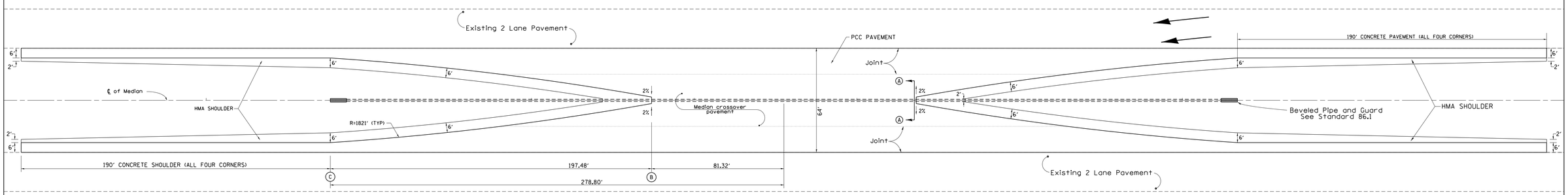

TYPICAL PLAN

Unless otherwise specified, when the median crossover is to be removed, the Contractor shall be required to saw full-depth along the shoulder line 6' from edge of pavement). The 6' adjacent to the edge of pavement shall remain in place and be used as shoulders. The cost of Sawing shall be included in the Pavement Removal.

Longitudinal joints shall be sawed at a max 12' width. All joints shall be sealed.

TRAFFIC CONTROL STANDARD 701416 IS TO BE USED WITH THIS DETAIL

FILE NAME = District 2 Standard	USER NAME = IDOT/District 2	DESIGNED -	REVISED - 6-27-14	STATE OF ILLINOIS DEPARTMENT OF TRANSPORTATION	REGION 2 / DISTRICT 2 STANDARD	F.A. RTE.	SECTION	COUNTY	TOTAL SHEETS / SHEET NO.
		DRAWN -	REVISED - 8-27-13						
	PLOT SCALE = 1.0000 ' / in.	CHECKED -	REVISED - 4-04-11					CONTRACT NO.	
	PLOT DATE = Thu Nov 13 11:29:24 2014	DATE -	REVISED -		SCALE: SHEET NO. OF SHEETS STA. TO STA.	FED. ROAD DIST. NO.	ILLINOIS	FED. AID PROJECT	

88' TWO LANE MEDIAN CROSSOVER

(POSTED SPEED LIMIT 65 MPH OR HIGHER, WORK ZONE SPEED LIMIT 55 MPH)

TYPICAL SECTION

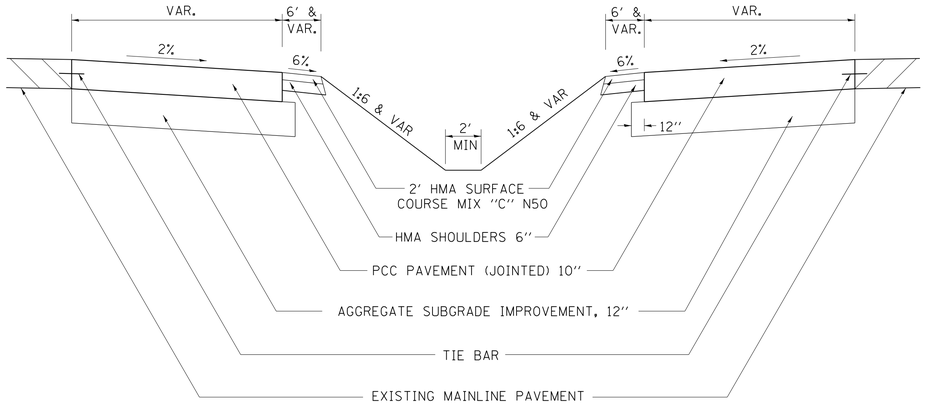

TABLE OF OFFSETS AND DROPS														
Distance feet from location station	0	70.29' Ⓑ	75'	100'	125'	150'	175'	200'	225'	250'	275'	300'	325'	329.24' Ⓒ
Offsets feet from inside edge of pavement	44' ℄	42'	41.00'	35.93'	31.23'	26.86'	22.86'	19.22'	15.94'	13.00'	10.42'	8.18'	6.29'	6.00'
Drop feet from inside edge of pavement	0.88'	0.84'	0.82'	0.72'	0.62'	0.54'	0.46'	0.38'	0.32'	0.26'	0.21'	0.16'	0.13'	0.12'

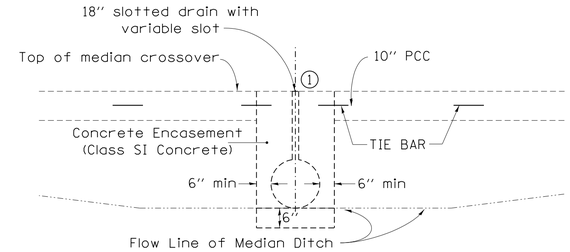

SECTION A–A

(USE TO MAINTAIN MEDIAN DRAINAGE THROUGH THE CROSSOVER)

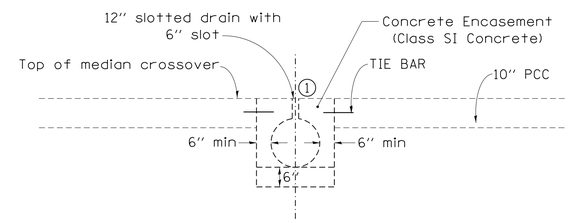

① Duct tape or wood blocks shall be used to cover slotted drain during construction of crossover paving

SECTION A–A

(WHEN CROSSOVER IS AT MEDIAN HIGH POINT)

GENERAL NOTES

Construction of median crossover shall conform to the requirement of current Standard Specifications.

Slotted drain shall be constructed of 14 or 16 gauge corrugated metal roadway pipe modified to accommodate slotted drain as shown.

Pavement, subbase, & shoulder quantities are:

(4481.22 Sq. Yds.)	AGGREGATE SUBGRADE IMPROVEMENT, 12"
(4279.37 Sq. Yds.)	P.C.C. PAVEMENT, (JOINTED) 10"
(114.14 Tons)	2" HMA SURFACE COURSE, MIX "C", N50
(1019.14 Sq. Yds.)	HMA SHOULDERS 6"

Elbows and Caps shall be considered included to the SLOTTED DRAIN 12" WITH 6" SLOT.

See District Standard 61.2 or 68.1 for details for the slotted drain.

See District Standard 86.1 for details for the beveled pipe & guard.

The crossover is designed using a 55mph design speed.

The end of the pipe guard shall be set where a minimum 1:4 front slope can be constructed from each side of pipe guard to the HMA shoulder.

The PCC Pavement (Jointed) 10" shall be constructed according to Section 420 of the Standard Specifications and Highway Standards 420001, 420101, & 420106

The PCC Pavement (Jointed) 10" shall be tied to adjacent existing concrete pavement and the concrete encasement for the slotted drain. The tie bars shall be No.6 bars 24" long @ 30" cts, and installed according to the applicable portions of Article 420.05 (b) of the Standard Specifications. The cost of the bars to be included in the cost of the PCC Pavement (Jointed) 10".

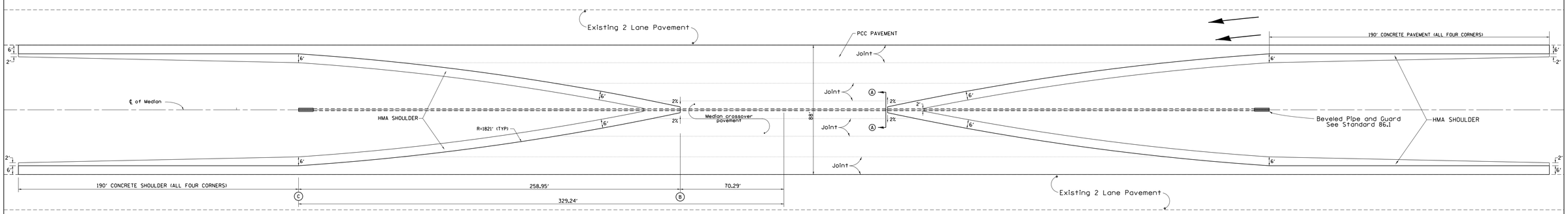

TYPICAL PLAN

Unless otherwise specified, when the median crossover is to be removed, the Contractor shall be required to saw full-depth along the shoulder line 6' from edge of pavement). The 6' adjacent to the edge of pavement shall remain in place and be used as shoulders. The cost of Sawing shall be included in the Pavement Removal.

Longitudinal joints shall be sawed at a max 12' width. All joints shall be sealed.

TRAFFIC CONTROL STANDARD 701416 IS TO BE USED WITH THIS DETAIL

FILE NAME = District 2 Standard	USER NAME = IDOT/District 2	DESIGNED -	REVISED - 6-27-14	STATE OF ILLINOIS DEPARTMENT OF TRANSPORTATION	REGION 2 / DISTRICT 2 STANDARD	F.A. RTE.	SECTION	COUNTY	TOTAL SHEETS / SHEET NO.
		DRAWN -	REVISED - 8-27-13						
	PLOT SCALE = 1.0000 ' / in.	CHECKED -	REVISED - 4-04-11					CONTRACT NO.	
	PLOT DATE = Thu Nov 13 11:29:25 2014	DATE -	REVISED -		SCALE: SHEET NO. OF SHEETS STA. TO STA.	FED. ROAD DIST. NO.	ILLINOIS	FED. AID PROJECT	

BEVELED PIPE & GUARD DETAIL FOR MEDIAN CROSSOVER

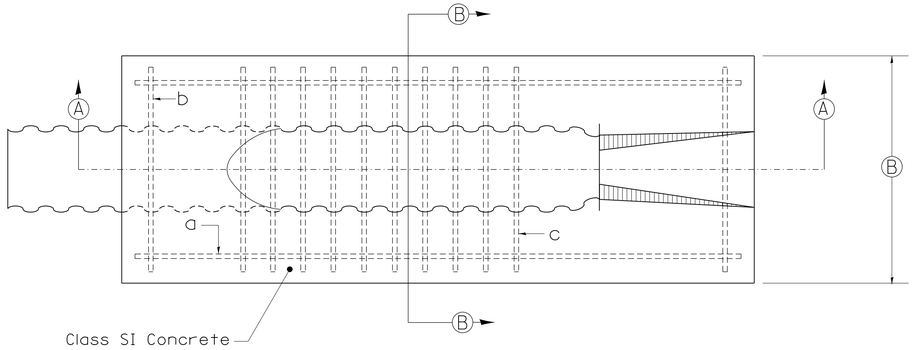

PLAN VIEW

12 PIPE REINFORCING SCHEDULE			
Mark Req'd	Bar Size	Length	No.
a	5	110	2
b	5	32	2
c	8	34	10

18 PIPE REINFORCING SCHEDULE			
Mark Req'd	Bar Size	Length	No.
a	5	162	2
b	5	38	2
c	8	40	18

GENERAL NOTES:

Details shown hereon are for the construction of beveled pipe and guard. Alternate designs, methods of construction or materials may be submitted to the Engineer for approval. All methods of construction and materials involved shall conform to current Standard Specifications.

Reinforcing steel used in construction of "Beveled Pipe and Guard" shall be deformed bars meeting the requirements of Article 1006.10 of the Standard Specifications. All steel bars shall be hot-dip galvanized in accordance with ASTM A 123 specifications.

Concrete used in construction of the beveled pipe and guard shall be Class "SI" Concrete.

The corrugated metal pipe shall be cut to fit the 1:8 foreslope. Slots shall be cut into the C.M.P. for placement of the 'b' and 'c' bars. After the foreslope has been placed, the 'b' and 'c' bars shall be fitted into the slots cut in the C.M.P. so they will be in proper position when the concrete collar is poured.

This work shall be paid for at the contract unit price per Each for "Beveled Pipe and Guard", as shown hereon and as directed by the Engineer.

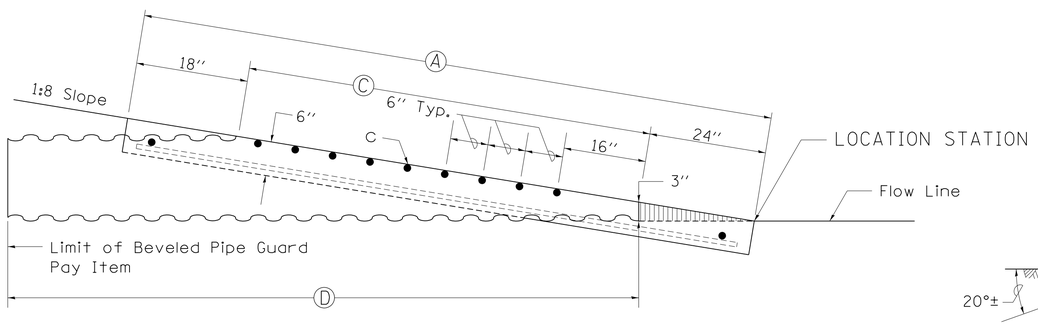

SECTION A-A

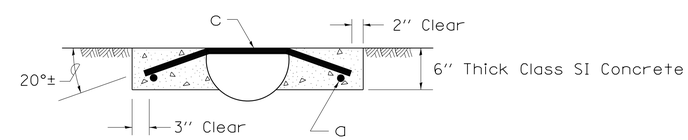

SECTION B-B

TABLE OF DIMENSIONS				
PIPE SIZE	A	B	C	D
12	9'-6'	36	6'	10'
18	13'-10"	42	10'-4"	14'-10"

TYPICAL SECTION THRU CENTERLINE OF MEDIAN CROSSOVER

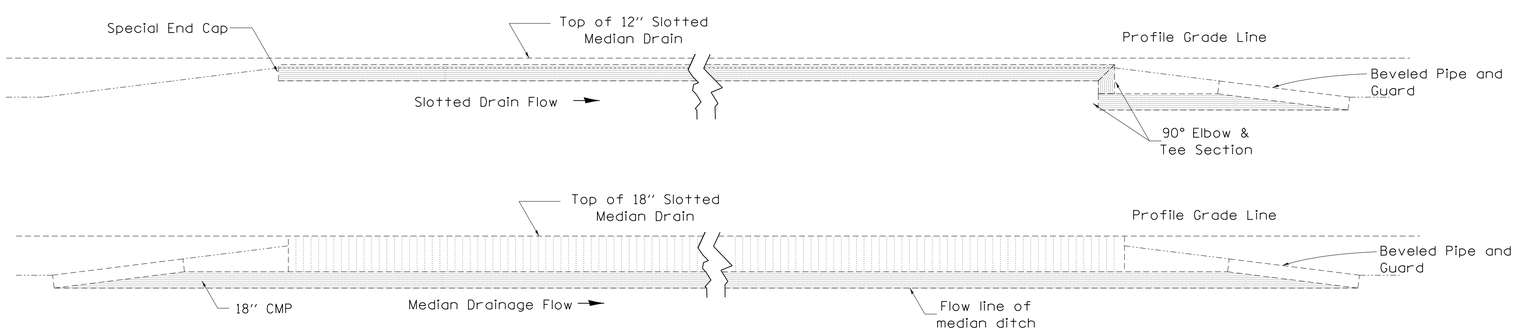

ALL DIMENSIONS ARE IN INCHES UNLESS OTHERWISE NOTED.

FILE NAME = District 2 Standard	USER NAME = IDOT/District 2	DESIGNED -	REVISED - 5-27-09	STATE OF ILLINOIS DEPARTMENT OF TRANSPORTATION	REGION 2 / DISTRICT 2 STANDARD	F.A. RTE.	SECTION	COUNTY	TOTAL SHEETS / SHEET NO.
		DRAWN -	REVISED -						
	PLOT SCALE = 1.0000 ' / in.	CHECKED -	REVISED -					CONTRACT NO.	
	PLOT DATE = Thu Nov 13 11:29:26 2014	DATE -	REVISED -		SCALE: SHEET NO. OF SHEETS STA. TO STA.	FED. ROAD DIST. NO.	ILLINOIS	FED. AID PROJECT	

TRAFFIC BARRIER TERMINAL, TYPE 6B (SPECIAL)

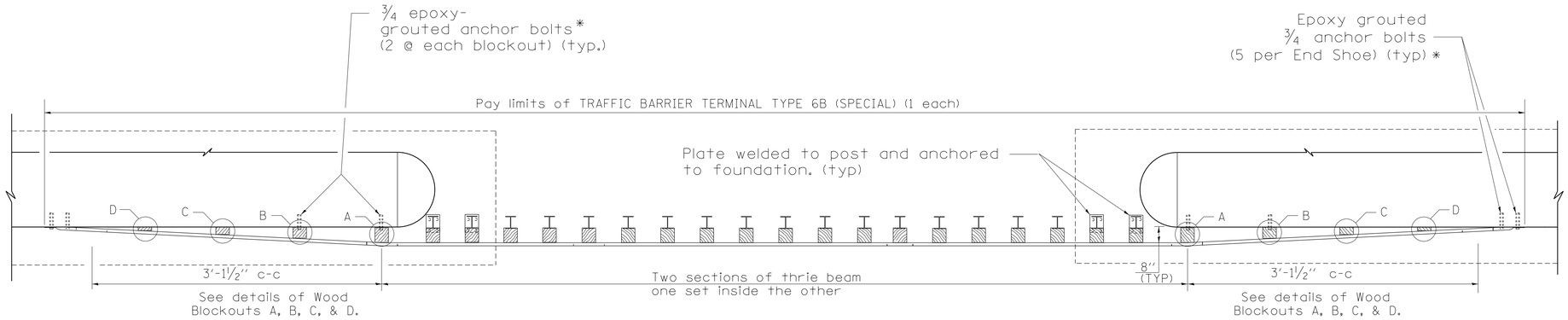

PLAN

* With standard washers. After tightening, cut the anchor bolts flush with the nuts and damage the nuts to prevent them from loosing.

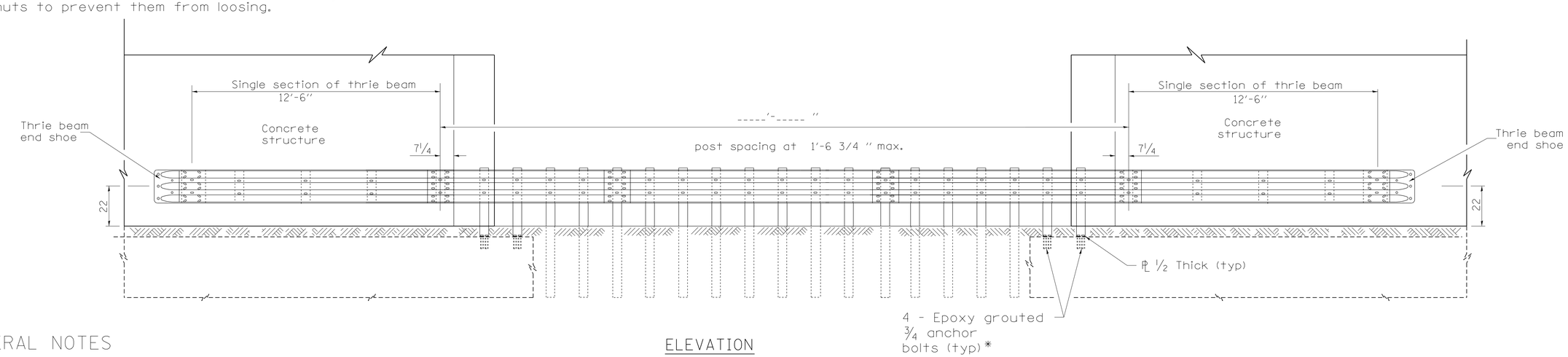

ELEVATION

GENERAL NOTES

This work shall be done according to Section 631 of the Standard Specifications and this detail.

See Standard 630001 for details of guardrail not shown.

Thrie beam rail shall be bolted to block-out at all posts.

Posts located above pier foundation shall have plate attached to post and anchored to foundaton.

All slope ratios are expressed as units of vertical displacement to units of horizontal displacement (V:H).

All dimensions are in inches unless otherwise shown.

The Traffic barrier Terminal, Type 6B (Special) will be measured for payment, complete in place, in units of each.

This work shall be paid for at the contract unit price per each for TRAFFIC BARRIER TERMINAL, TYPE 6B (SPECIAL).

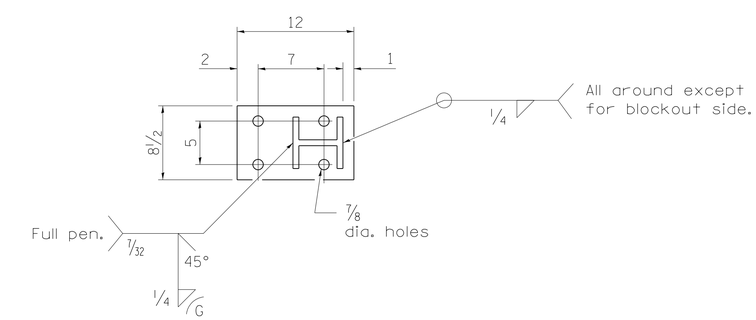

PLATE DETAIL

FILE NAME = District 2 Standard	USER NAME = IDOT/District 2	DESIGNED -	REVISED - 10-18-11	STATE OF ILLINOIS DEPARTMENT OF TRANSPORTATION	REGION 2 / DISTRICT 2 STANDARD	F.A. RTE.	SECTION	COUNTY	TOTAL SHEETS / SHEET NO.
		DRAWN -	REVISED -						
	PLOT SCALE = 1.0000 ' / in.	CHECKED -	REVISED -					CONTRACT NO.	
	PLOT DATE = Thu Nov 13 11:29:26 2014	DATE -	REVISED -		SCALE: SHEET NO. OF SHEETS STA. TO STA.	FED. ROAD DIST. NO.	ILLINOIS	FED. AID PROJECT	

TRAFFIC BARRIER TERMINAL, TYPE 6B (SPECIAL) SHEET 1 OF 2 90.1

TRAFFIC BARRIER TERMINAL, TYPE 6B (SPECIAL)

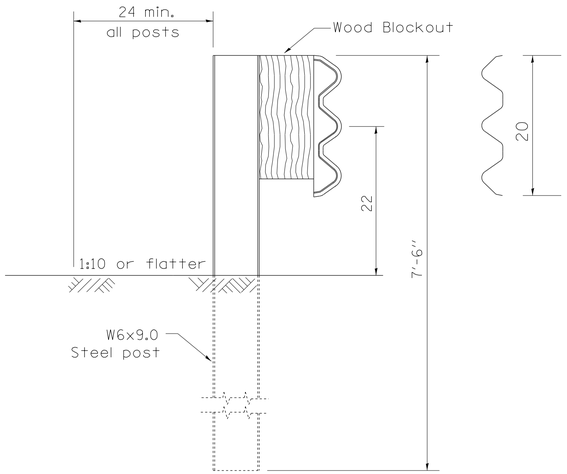

SECTION A-A

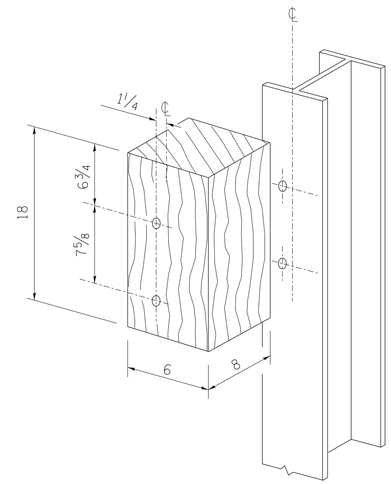

WOOD BLOCKOUT DETAIL

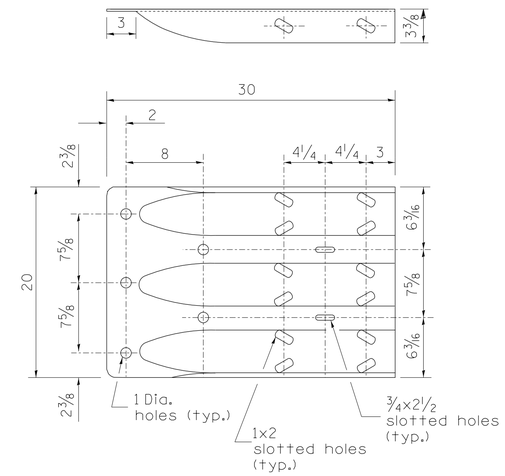

THRIE BEAM END SHOE DETAIL

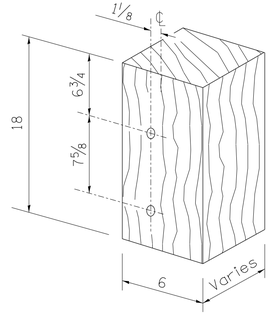

MODIFIED THICKNESS DETAIL

WOOD BLOCKOUTS A, B, C, & D

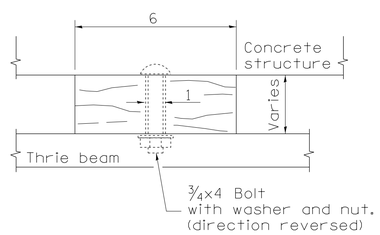

WOOD BLOCKOUT D

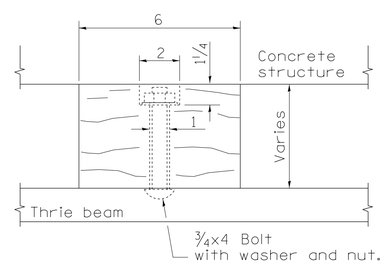

WOOD BLOCKOUT C

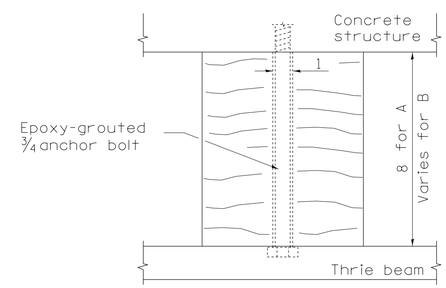

WOOD BLOCKOUT A & B

FILE NAME = District 2 Standard	USER NAME = IDOT/District 2	DESIGNED -	REVISED - 10-18-11	STATE OF ILLINOIS DEPARTMENT OF TRANSPORTATION	REGION 2 / DISTRICT 2 STANDARD	F.A. RTE.	SECTION	COUNTY	TOTAL SHEETS / SHEET NO.
		DRAWN -	REVISED -						
	PLOT SCALE = 1.0000 ' / in.	CHECKED -	REVISED -					CONTRACT NO.	
	PLOT DATE = Thu Nov 13 11:29:27 2014	DATE -	REVISED -		SCALE: SHEET NO. OF SHEETS STA. TO STA.	FED. ROAD DIST. NO.	ILLINOIS	FED. AID PROJECT	

DETAILS OF PLANTING AND BRACING TREES

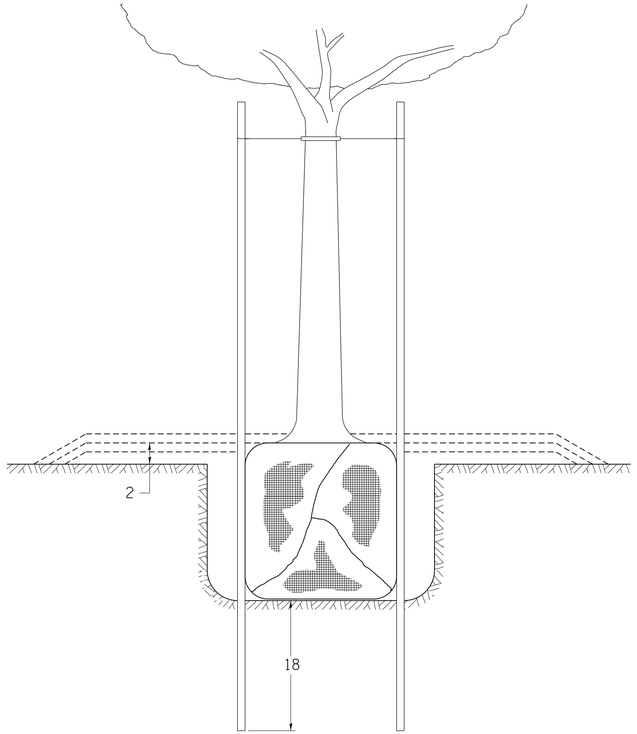

TREES SMALLER THAN 4½ IN DIAMETER

SMALL	A	B	C	D	E	F
TREE SIZE	DIAMETER OF BALL OR ROOT SYS.	DEPTH OF HOLE EXCAVATION	WIDTH OF HOLE EXCAVATION	THICKNESS OF MULCH COVER	DEPTH OF BALL OR ROOT SYS.	VOLUME OF MULCH COVER CU. YDS.
5'-6'	16	10	30	4	12	0.54
5'-6' BB	16	10	30	4	12	0.54
6'-7' BB	18	12	30	4	14	0.54
7'-8' BB	20	11	30	4	13	0.54
8'-10' BB	24	14	36	4	16	0.61
10'-12' BB	26	15	36	4	17	0.61

LARGE	A	B	C	D	E	F
TREE SIZE	DIAMETER OF BALL OR ROOT SYS.	DEPTH OF HOLE EXCAVATION	WIDTH OF HOLE EXCAVATION	THICKNESS OF MULCH COVER	DEPTH OF BALL OR ROOT SYS.	VOLUME OF MULCH COVER CU. YDS.
0-2	20	11	36	4	13	0.61
2-2½ BB	24	14	48	4	16	0.78
2½-3 BB	28	17	48	4	19	0.78
3-3½ BB	32	17	60	4	19	0.96
3½-4 BB	36	20	60	4	22	0.96
4-4½ BB	40	22	72	4	24	1.16
4½-5 BB	44	24	72	4	26	1.16
5-5½ BB	48	27	84	4	29	1.38

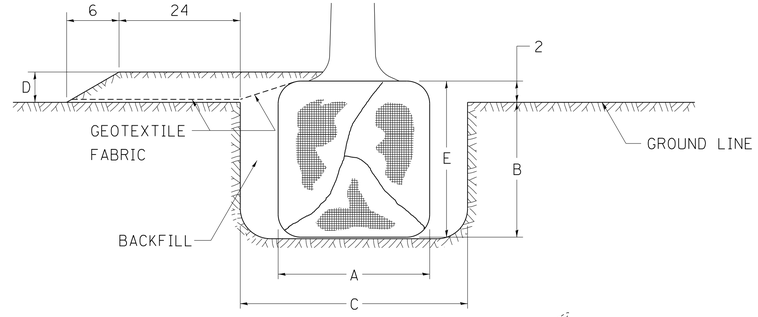

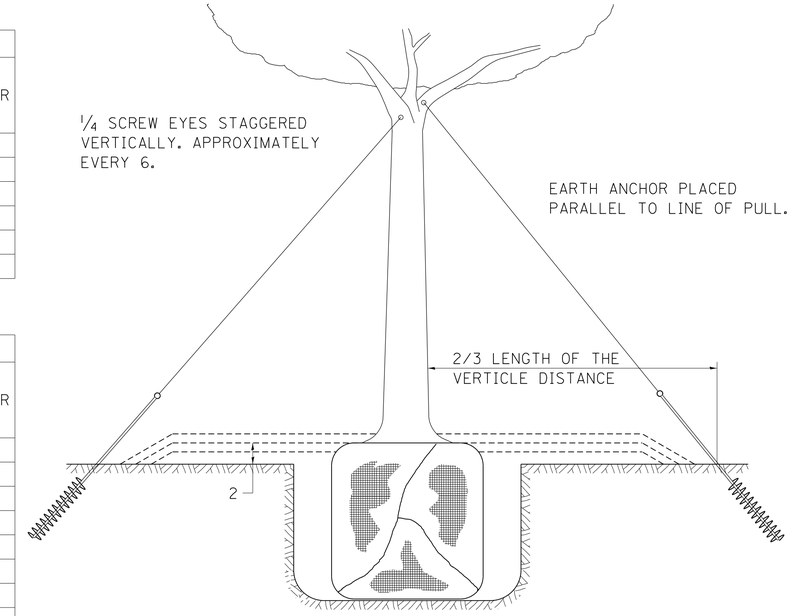

TREES OVER 4½ IN DIAMETER

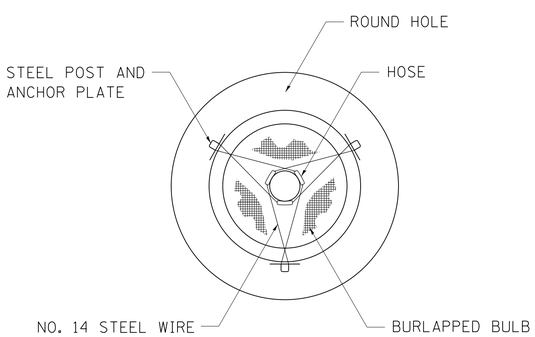

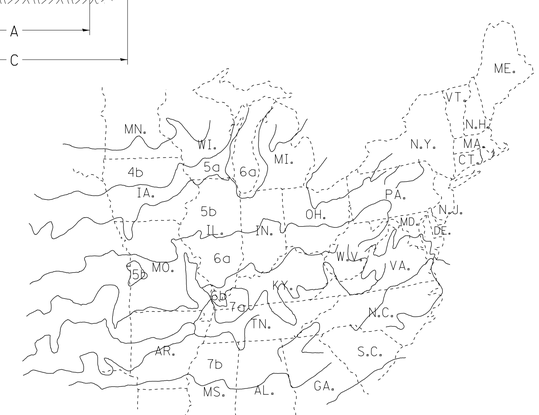

PLANT HARDINESS ZONE MAP

U.S. DEPARTMENT OF AGRICULTURE
AGRICULTURAL RESEARCH SERVICE
PUBLICATION NO. 814

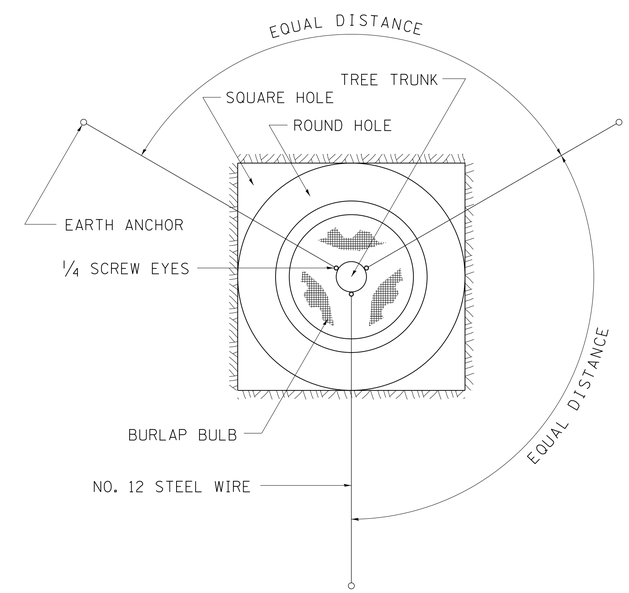

ALL DIMENSIONS ARE IN INCHES
UNLESS OTHERWISE NOTED.

FILE NAME = District 2 Standard	USER NAME = IDOT/District 2	DESIGNED -	REVISED - 10-18-11	STATE OF ILLINOIS DEPARTMENT OF TRANSPORTATION	REGION 2 / DISTRICT 2 STANDARD	F.A. RTE.	SECTION	COUNTY	TOTAL SHEETS / SHEET NO.
		DRAWN -	REVISED -						
	PLOT SCALE = 1.0000 ' / in.	CHECKED -	REVISED -					CONTRACT NO.	
	PLOT DATE = Tue Nov 18 09:34:16 2014	DATE -	REVISED -		SCALE: SHEET NO. OF SHEETS STA. TO STA.	FED. ROAD DIST. NO.	ILLINOIS	FED. AID PROJECT	