STATE OF ILLINOIS
DEPARTMENT OF TRANSPORTATION

ROUTE NO.	SECTION	COUNTY	TOTAL SHEETS	SHEET NO.
		White	77	67
FED. ROAD DIST. NO. 7		ILLINOIS	FED. AID PROJECT-	

SHEET NO. 11
12 SHEETS
94861

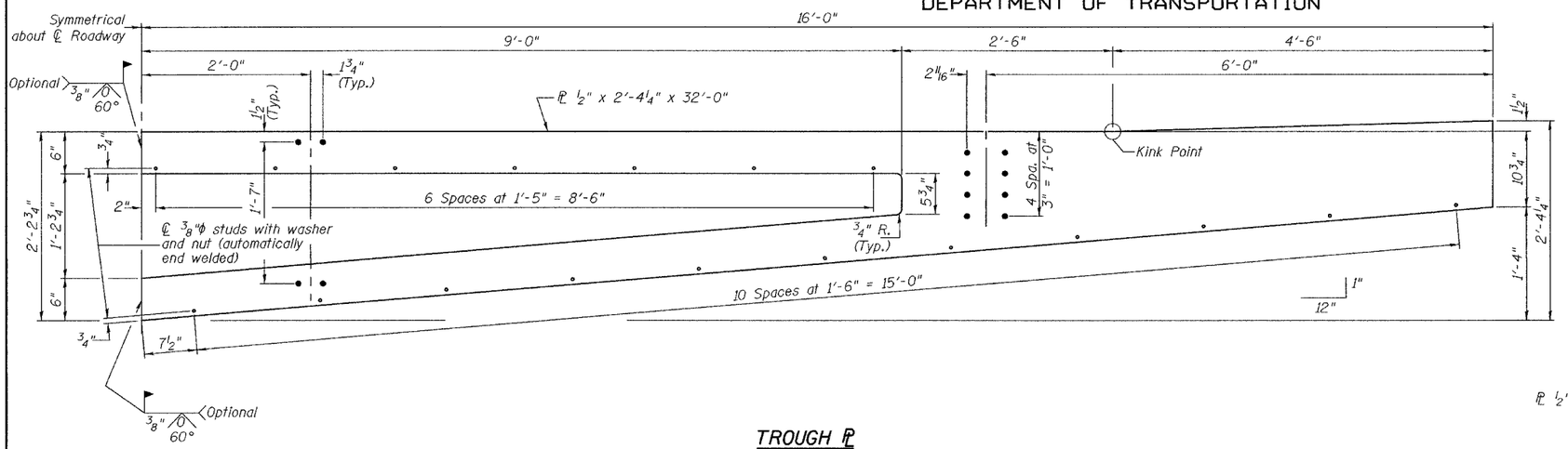

TROUGH PL
(2 PL's Req'd 1/2" x 2'-4 1/4" x 32'-0")
(1 PL W.B. Roadway Pier 8)
(1 PL E.B. Roadway Pier 8)

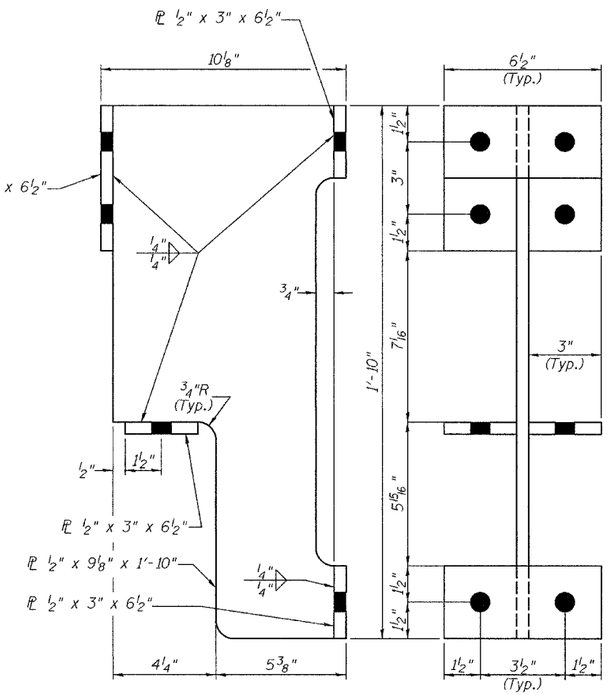

BRACKET
(4 Required)

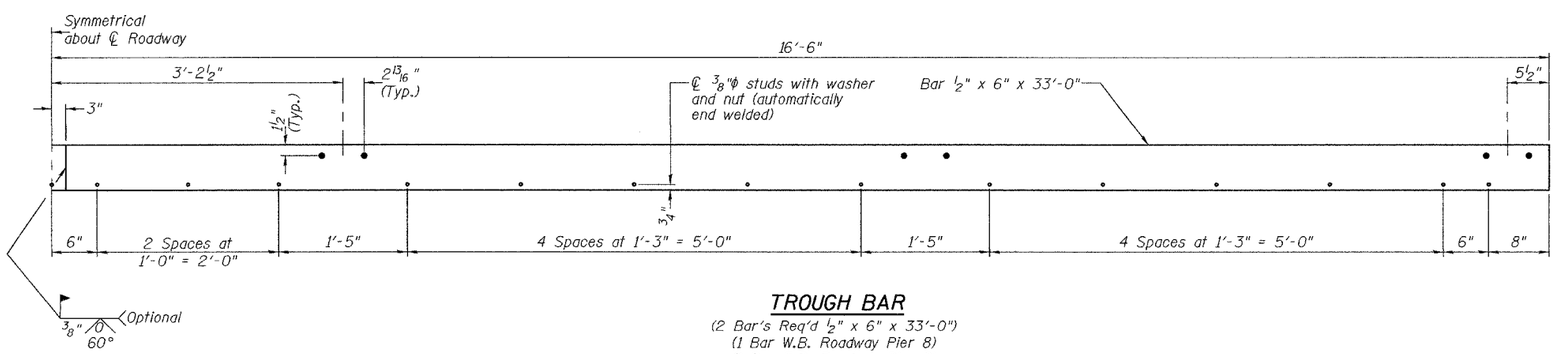

TROUGH BAR
(2 Bar's Req'd 1/2" x 6" x 33'-0")
(1 Bar W.B. Roadway Pier 8)
(1 Bar E.B. Roadway Pier 8)

DESIGNED	P.S.J.
CHECKED	J.S.B.
DRAWN	Drew Christopher
CHECKED	J.S.B. / P.S.J.

September 7, 2004
EXAMINED John A. Morris
ENGINEER OF STRUCTURAL SERVICES
PASSED Ralph E. Anderson
ENGINEER OF BRIDGES AND STRUCTURES

REPAIR DETAIL "D"
PIER 8 TROUGH
F.A.I. RT. 64
I-64 OVER WABASH RIVER
WHITE COUNTY
SN.097-0003 & 097-0004