STATE OF ILLINOIS
DEPARTMENT OF TRANSPORTATION

ROUTE NO.	SECTION	COUNTY	TOTAL SHEETS	SHEET NO.
		White	77	63
FED. ROAD DIST. NO. 7		ILLINOIS	FED. AID PROJECT-	

SHEET NO. 7
12 SHEETS
94/861

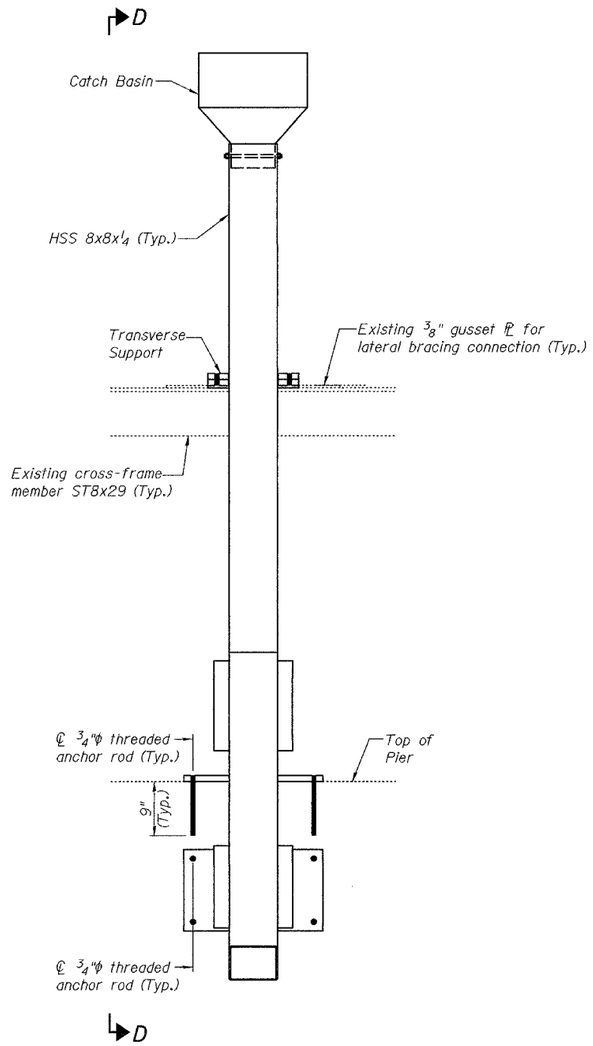

ELEVATION

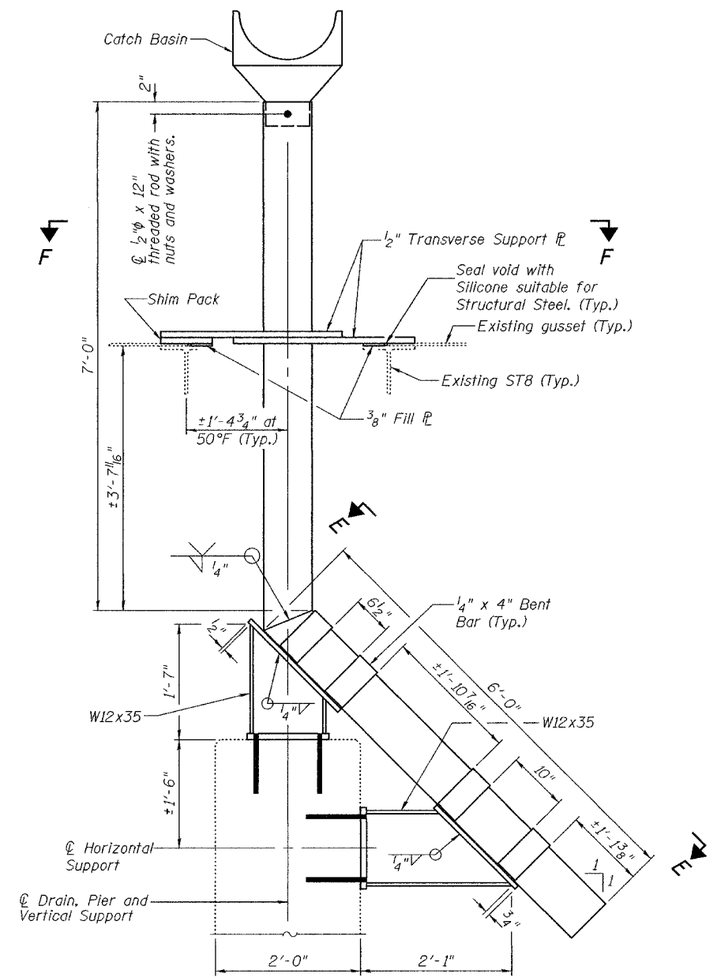

SECTION D-D

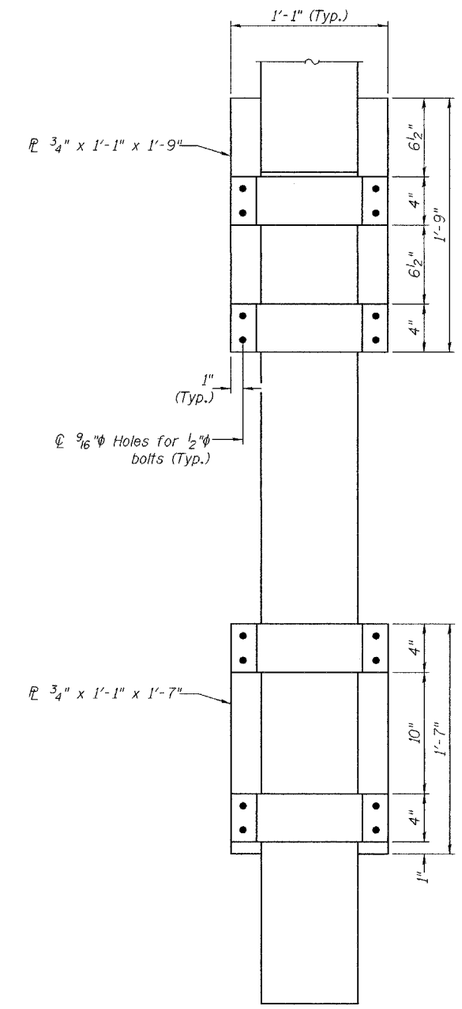

SECTION E-E

DESIGNED	P.S.J.
CHECKED	J.S.B.
DRAWN	Drew Christopher
CHECKED	J.S.B. / P.S.J.

September 7, 2004
EXAMINED John A. Morris
ENGINEER OF STRUCTURAL SERVICES
PASSED Ralph E. Anderson
ENGINEER OF BRIDGES AND STRUCTURES

REPAIR DETAIL "C"
PIER 4 DRAINAGE SYSTEM
F.A.I. RT. 64
I-64 OVER WABASH RIVER
WHITE COUNTY
SN.097-0003 & 097-0004