STATE OF ILLINOIS
DEPARTMENT OF TRANSPORTATION

ROUTE NO.	SECTION	COUNTY	TOTAL SHEETS	SHEET NO.
		White	77	61
FED. ROAD DIST. NO. 7		ILLINOIS	FED. AID PROJECT-	

SHEET NO. 5
12 SHEETS
94861

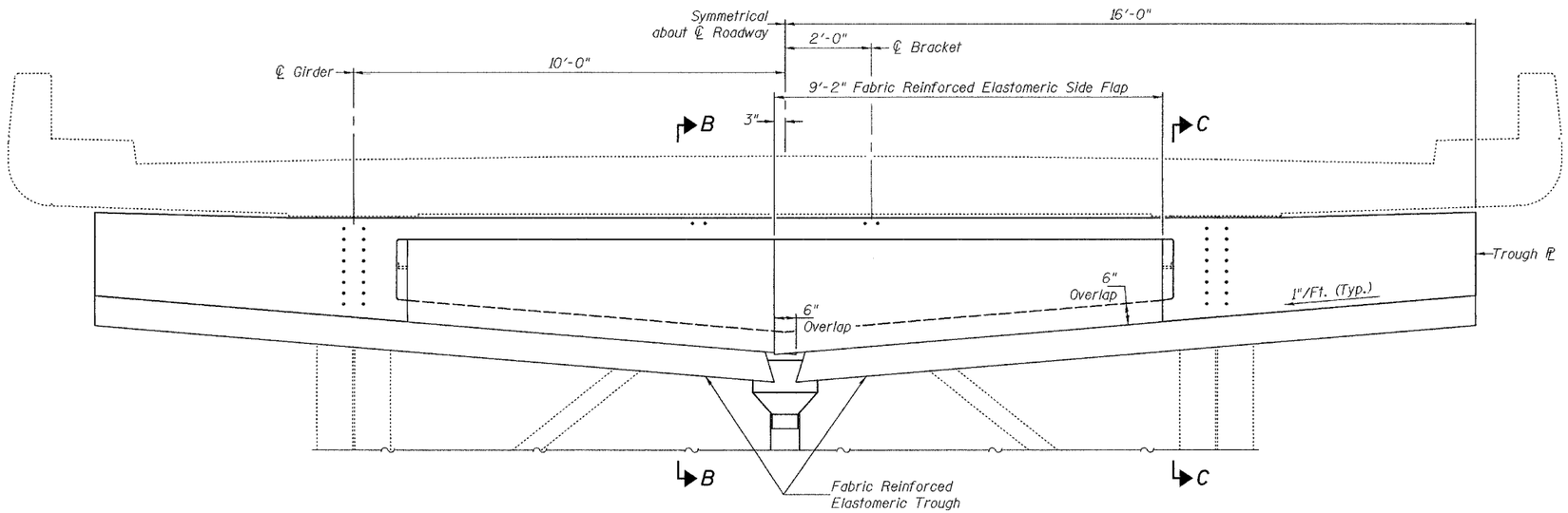

ELEVATION

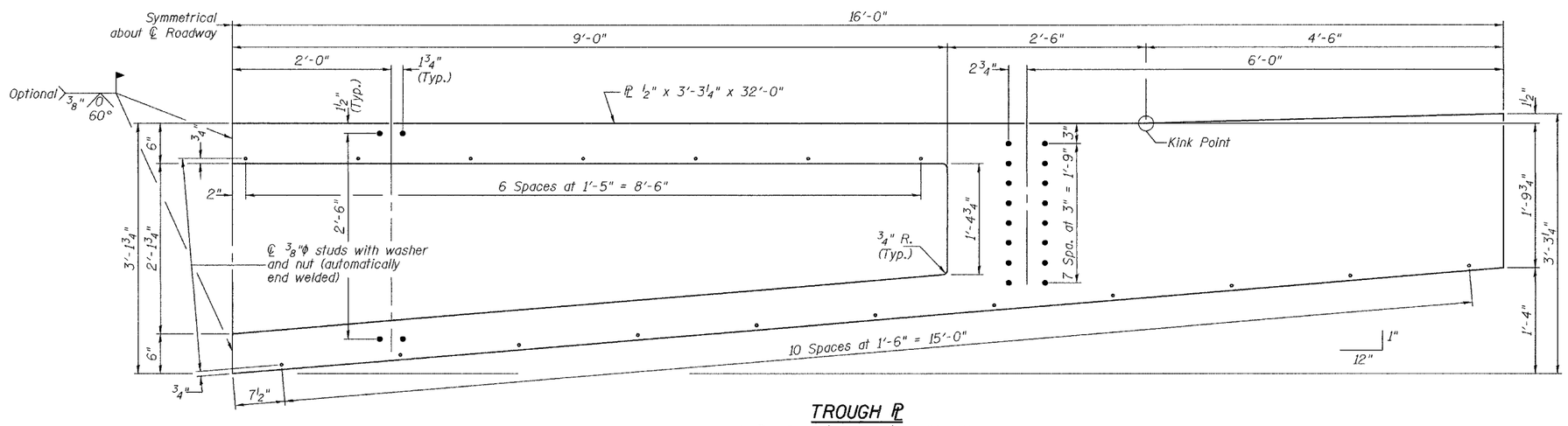

TROUGH ℙ

(4 ℙ's Req'd ½" x 3'-3¼" x 32'-0")
(2 ℙ's W.B. Roadway Pier 4)
(2 ℙ's E.B. Roadway Pier 4)

For sections B-B and C-C see sheet 6 of 12.

DESIGNED	P.S.J.
CHECKED	J.S.B.
DRAWN	Drew Christopher
CHECKED	J.S.B. / P.S.J.

September 7, 2004

EXAMINED John A. Morris
ENGINEER OF STRUCTURAL SERVICES

PASSED Ralph E. Anderson
ENGINEER OF BRIDGES AND STRUCTURES

REPAIR DETAIL "C"
PIER 4 TROUGH
F.A.I. RT. 64
I-64 OVER WABASH RIVER
WHITE COUNTY
SN.097-0003 & 097-0004