steffenmk
8. 3/2004
c:\projects\94861d\d00104pa.dgn
EXP W

RTE.	SECTION	COUNTY	TOTAL SHEETS	SHEET NO.
*	**	WHITE	77	28
FED. ROAD DIST. NO. 7	ILLINOIS	FED. AID PROJECT NO.		

* FAI 64 (I-64)

** D-7 BRIDGE DECK REPAIRS FY 2005

CONTRACT NO. 94861

BAR LIST PER BRIDGE - WEST ABUTMENT - STR #097-0003/0004

BAR	NUMBER OF BARS	SIZE	LENGTH	SHAPE
a(E)	5	7	35'-6"	
a1(E)	5	7	34'-0"	
d(E)	12	4	3'-3"	
d1(E)	6	4	6'-6"	
h(E)	4	6	33'-6"	
h1(E)	20	4	1'-2"	
h2(E)	4	4	4'-3"	
h3(E)	12	5	4'-9"	
x(E)	35	5	2'-5"	
REINFORCEMENT BARS (EPOXY CTD.)			LBS	1140

REINFORCEMENTBARS DESIGNATED (E) SHALL BE EPOXY COATED

N

CONCRETE REMOVAL (LIMITS ARE FROM OUT TO OUT OF DECK)

BITUMINOUS CONCRETE REMOVAL (DECK)

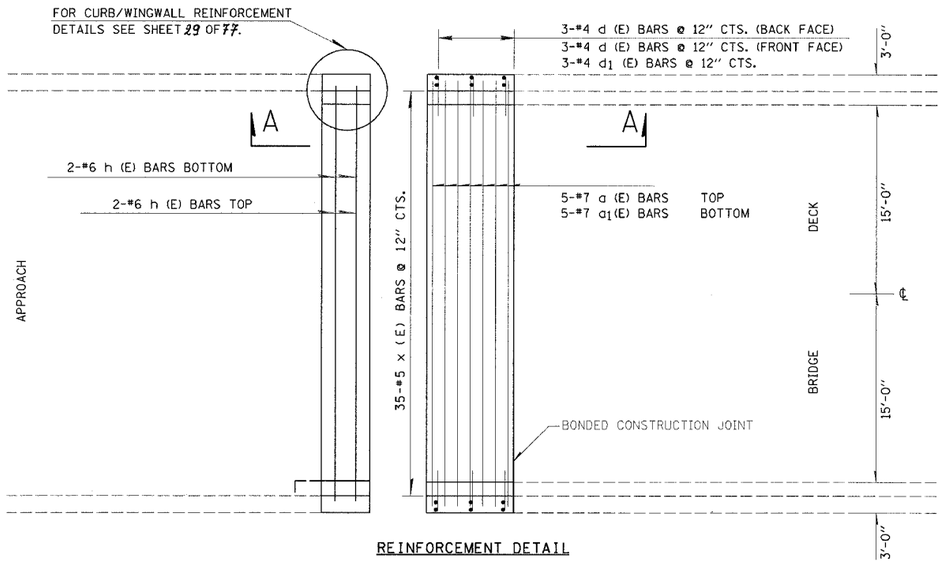

REINFORCEMENT DETAIL
WEST ABUTMENT

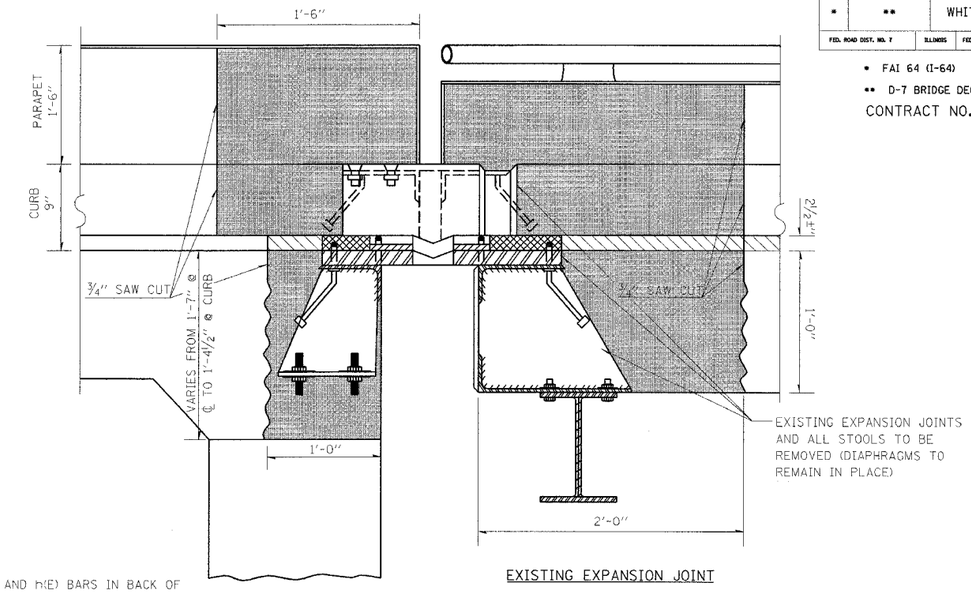

EXISTING EXPANSION JOINT
(SHOWING EXISTING NEOPRENE JOINT ATTACHED TO ORIGINAL FINGER JOINT)

** PLACE a(E) AND h(E) BARS IN BACK OF ANCHOR BOLT AS SHOWN IF REQUIRED TO MAINTAIN 1" CLEARANCE (+/-1/8"). ANCHOR BOLTS SHOULD BE TIED TO a(E) AND h(E) BARS.

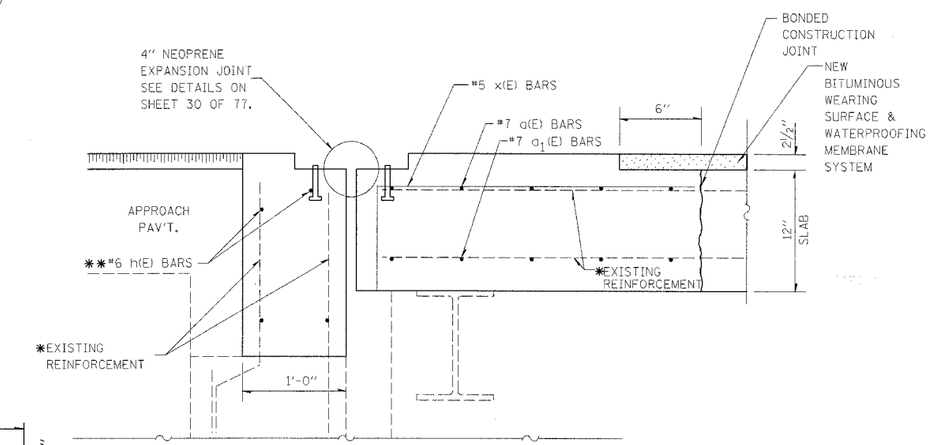

SECTION A-A

PROPOSED EXPANSION JOINT AT ABUTMENT

*NOTE: EXISTING REINFORCEMENT BARS ARE TO BE CLEANED, STRAIGHTENED AND INCORPORATED INTO NEW CONSTRUCTION.

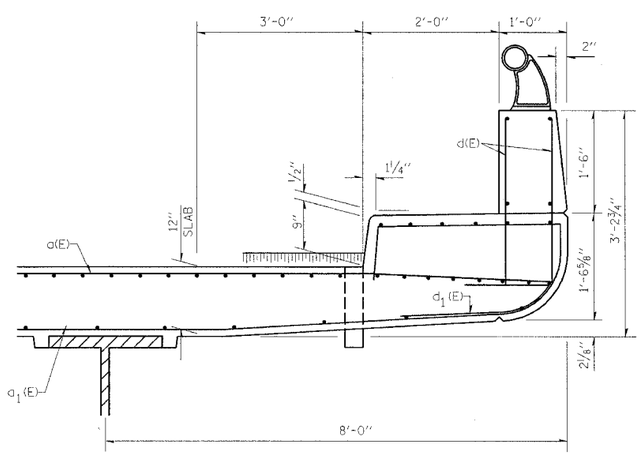

WEST ABUTMENT
PARAPET DETAIL

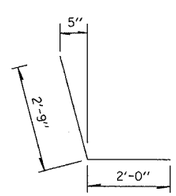

BAR h_3(E)

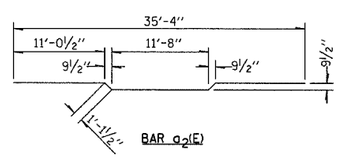

BAR a_2(E)

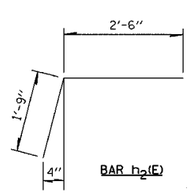

BAR h_2(E)

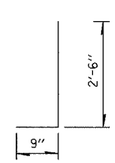

BAR d (E)

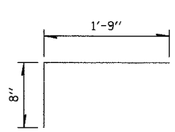

BAR x (E)

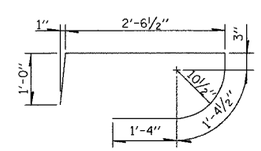

BAR d_1(E)

REVISIONS	
NAME	DATE

ILLINOIS DEPARTMENT OF TRANSPORTATION

EXPANSION JOINT DETAILS WEST ABUTMENT STR #097-0003/0004

SCALE: VERT. HORIZ.
DATE
DRAWN BY
CHECKED BY