F.A.U. RTE.	SECTION	COUNTY	TOTAL SHEETS	SHEET NO.
547	02-11113-00-BR	WILL	17	16
STA.		TO STA.		
FED. ROAD DIST. NO.	ILLINOIS	FED. AID PROJECT		

CONTRACT # 83777

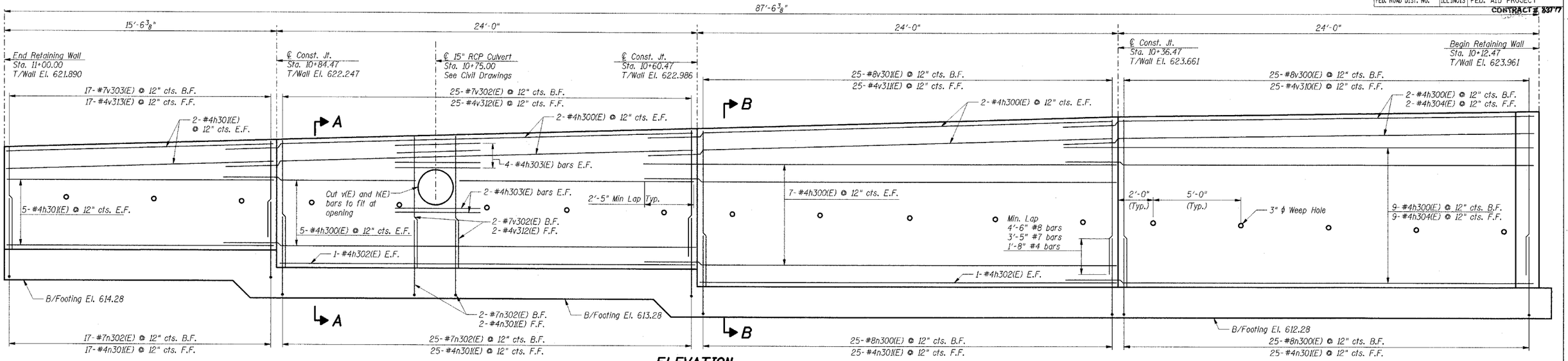

ELEVATION

(Wingwall and Steel Railing not shown for clarity)

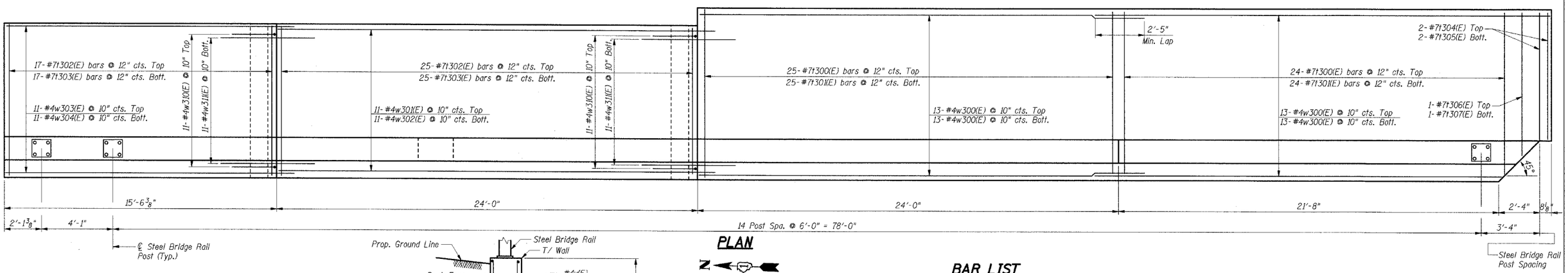

PLAN

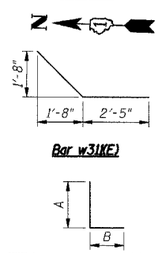

Bar	A	B
t300(E)	9'-4"	1'-2"
n300(E)	6'-9"	1'-4"
n301(E)	3'-11"	0'-8"
n302(E)	5'-8"	1'-2"
t302(E)	8'-4"	1'-2"
t304(E)	7'-0"	1'-2"
t306(E)	8'-0"	1'-2"
w310(E)	2'-5"	1'-9"

BAR LIST

Bar	No.	Size	Length	Shape
h300(E)	43	#4	26'-5"	
h301(E)	14	#4	15'-2"	
h302(E)	4	#4	23'-8"	
h303(E)	12	#4	4'-10"	
h304(E)	11	#4	24'-1"	
n300(E)	50	#8	8'-1"	
n301(E)	94	#4	4'-7"	
n302(E)	44	#7	6'-10"	
t300(E)	49	#7	10'-6"	
t301(E)	49	#7	9'-4"	
t302(E)	42	#7	9'-6"	
t303(E)	42	#7	8'-4"	
t304(E)	2	#7	8'-2"	
t305(E)	2	#7	7'-0"	
t306(E)	1	#7	9'-2"	
t307(E)	1	#7	8'-0"	
v300(E)	25	#8	9'-5"	
v301(E)	25	#8	8'-9"	
v302(E)	27	#7	7'-1"	
v303(E)	17	#7	5'-8"	
	25	#4	9'-5"	
	25	#4	8'-9"	
	27	#4	7'-1"	
	17	#4	5'-11"	
	52	#4	26'-2"	
	11	#4	25'-2"	
	11	#4	26'-10"	
	11	#4	15'-1"	
	11	#4	16'-8"	
	22	#4	4'-2"	
	22	#4	4'-10"	

BILL OF MATERIAL

Item	Unit	Total
Reinforcement Bars, Epoxy Coated	Lbs.	10,730
Concrete Structures	Cu. Yd.	90.5
Pourous Granular Embankment	Cu. Yd.	21.9

Notes:

1. All vertical bars in wall stem start 2" from Construction Joints and expansion joints (U.N.O.)
2. All edges shall have a 3/4" chamfer.
3. Reinforcement bars designated (E) shall be epoxy coated.
4. E.F. indicates each face, B.F. indicates back face, F.F. indicates front face.
5. Space reinforcement in wall to miss threaded anchor rods for Steel Bridge Rail. See Sht. S-6.

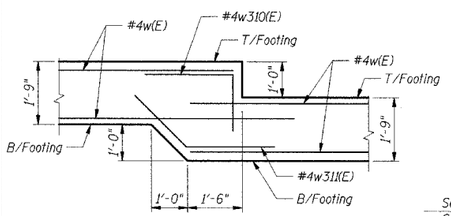

FOOTING STEP DETAIL

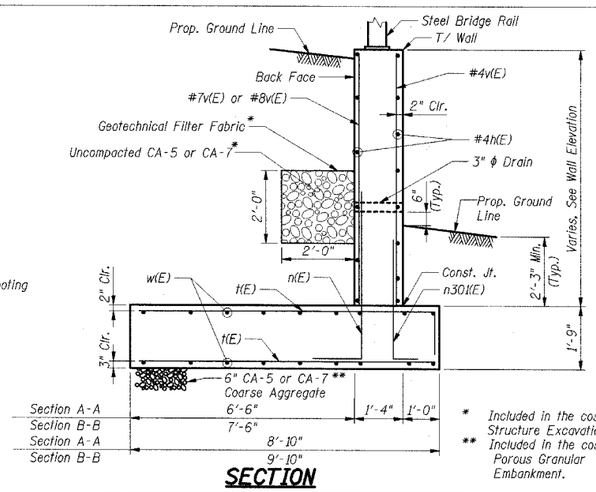

* Included in the cost of Structure Excavation.
** Included in the cost of Porous Granular Embankment.

SECTION

SHT. S-5

REVISIONS	
NAME	DATE

LOCKPORT TOWNSHIP
F.A.U. (547) OAK STREET OVER FIDDYMENT CREEK
WILL COUNTY

RETAINING WALL DETAILS

SCALE:
DATE: 7/22/04
DRAWN BY: FD
CHECKED BY: JRH

TENG

TENG & ASSOCIATES, INC.
ENGINEERS/ARCHITECTS/PLANNERS
205 N. MICHIGAN AVE. CHICAGO, IL 60601
TELEPHONE: 312/616-0000

..\GPE0000F.DGN, ..\TP0000F.DGN, ..\TB0000B.DGN, ..\DET0000J.DGN, ..\ALT0000J.DGN, ..\DET0000J.DGN, ..\SUR0000P.DGN, ..\DET0000E.DGN, ..\TP0000G.DGN, ..\DET0000E.DGN
KARNATMR
S:\DOCUMENT\02332502\STRUCT\DGN\DET0006J.DGN
8-31-2004,14:23:54