F.A.U. RTE.	SECTION	COUNTY	TOTAL SHEETS	SHEET NO.
547	02-11113-00-BR	WILL	17	15
STA.		TO STA.		
FED. ROAD DIST. NO.	ILLINOIS	FED. AID PROJECT		

CONTRACT # 83777

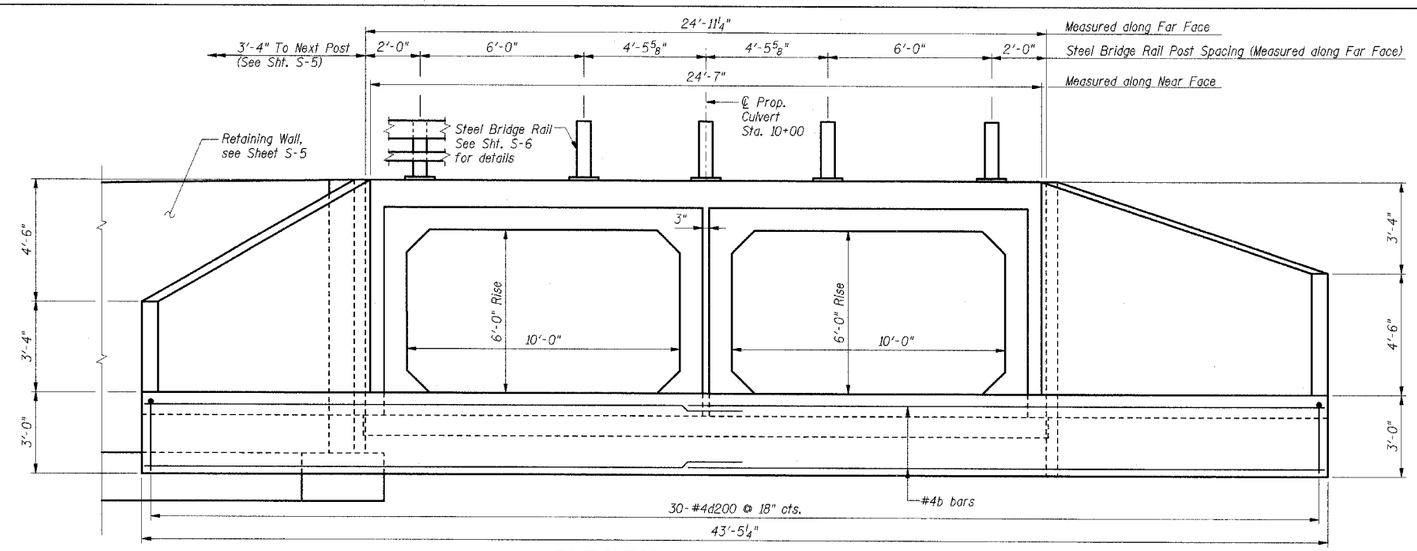

ELEVATION - LOOKING EAST

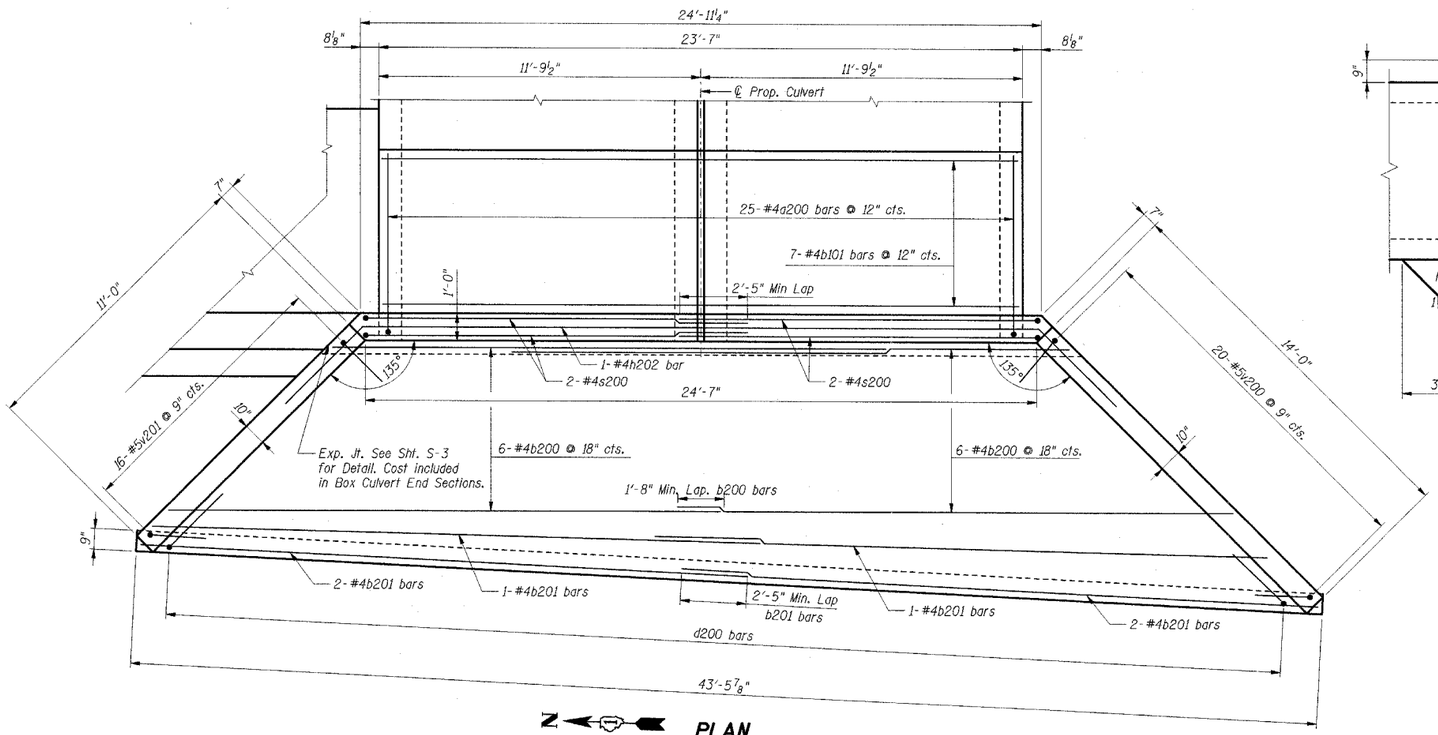

PLAN

(Steel Railing and posts not shown for clarity)

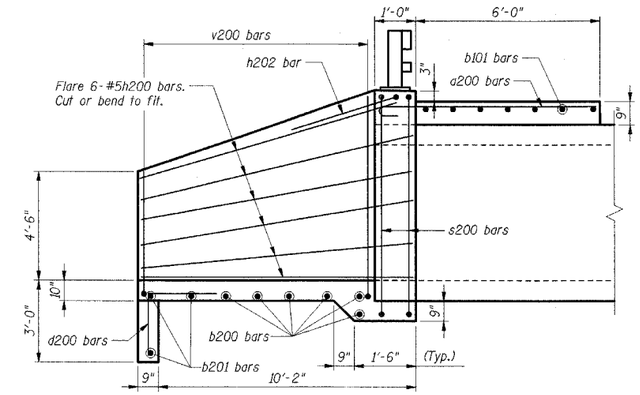

SOUTH SIDE ELEVATION

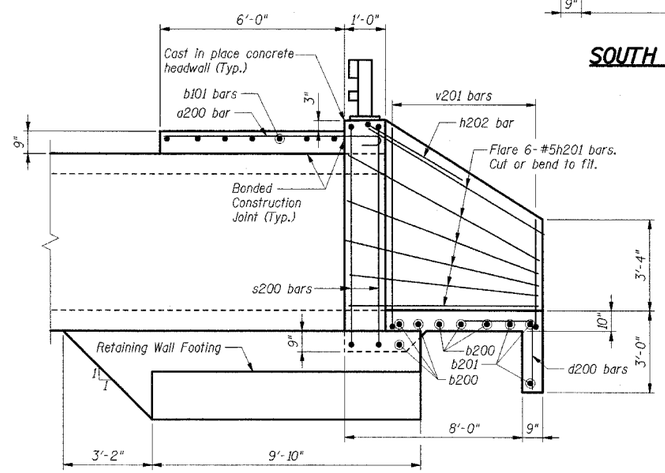

NORTH SIDE ELEVATION

Retaining Wall Stem not shown for clarity

BAR LIST

Bar	No.	Size	Length	Shape
a200	25	#4	7'-2"	
b101	7	#4	23'-3"	
b200	12	#4	20'-4"	
b201	6	#4	22'-10"	
d200	30	#4	5'-4"	
h200	6	#5	14'-7"	
h201	6	#5	14'-11"	
h202	1	#4	32'-7"	
s200	4	#4	36'-6"	
v200	10	#5	25'-2"	
v201	8	#5	23'-10"	

Item	Unit	Total
Reinforcement Bars**	Lbs.	1,360
Concrete Structures**	Cu. Yd.	19.7

** For information only. Cost included in Box Culvert End Sections.

BILL OF MATERIAL

Item	Unit	Total
Box Culvert End Sections	Each	1

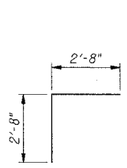

Bar d200

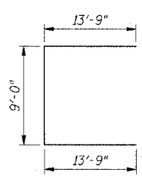

Bar s200

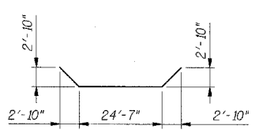

Bar h202

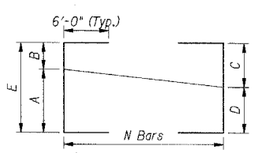

Bar Cutting Diagram

Bar	N	A	B	C	D	E
v200	10	8'-2"	5'-0"	6'-6"	6'-8"	13'-2"
v201	8	8'-1"	3'-9"	5'-9"	6'-1"	11'-10"

Notes:

1. Space reinforcement in headwall/collar to miss threaded anchor rods for Steel Railing (see Sht. S-6).
2. Cover from face of concrete to reinforcement shall be 3" for surfaces formed against earth and 2" for other surfaces, unless shown otherwise.
3. The cost of concrete, reinforcing bars and all appurtenant work to construct concrete headwalls/collars and wingwalls is included in the item Box Culvert End Sections.
4. For Steel Bridge Rail Details see Sht. S-6.
5. All edges shall have a ¾" chamfer.

SHT. S-4

REVISIONS	
NAME	DATE

LOCKPORT TOWNSHIP
F.A.U. (547) OAK STREET OVER FIDDYMENT CREEK
WILL COUNTY

END SECTION & HEADWALL/COLLAR DETAILS

SCALE:
DRAWN BY: FD
DATE: 7/22/04
CHECKED BY: JRH

TENG

TENG & ASSOCIATES, INC.
CIVIL ENGINEERS/ARCHITECTS/PLANNERS
205 N. MICHIGAN AVE. CHICAGO, IL 60601
TELEPHONE: 312/616-0900

..\GPE0000F.DGN,..\XXX0000MLDGN,..\TTB0000B.DGN,..\GPE0000F.DGN,..\DET0000E.DGN,..\DET0000J.DGN,..\GPE0000F.DGN
8-31-2004, 14:23:56
S:\DOCUMENT\02332502\STRUCTV\DGN\DET0005.DGN
KARNATMR