F.A.U. RTE.	SECTION	COUNTY	TOTAL SHEETS	SHEET NO.
547	02-11113-00-BR	WILL	17	14
STA.		TO STA.		
FED. ROAD DIST. NO.	ILLINOIS	FED. AID PROJECT		

CONTRACT # 83777

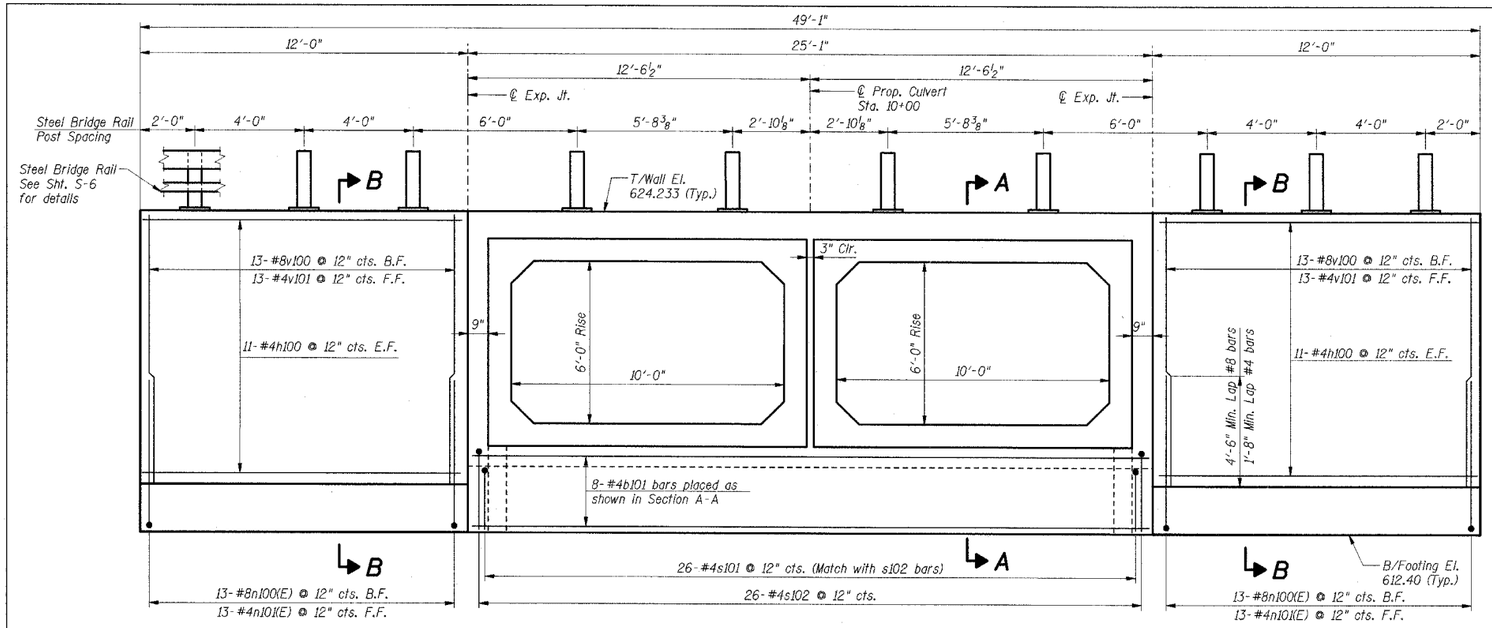

ELEVATION - LOOKING WEST

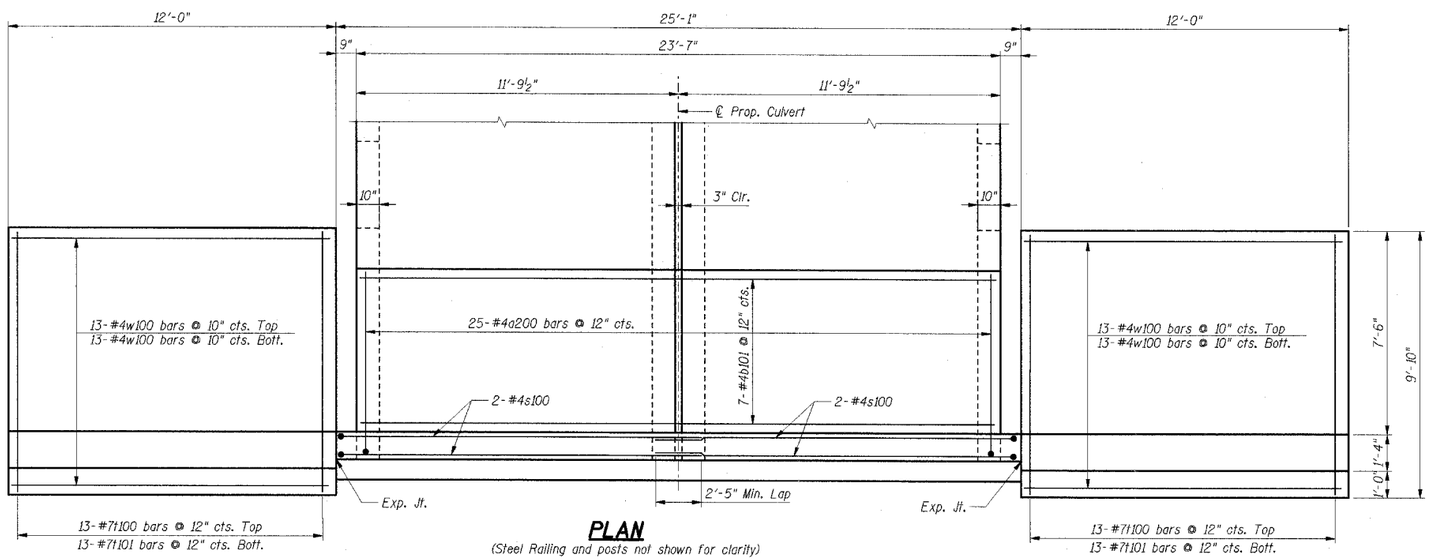

PLAN

(Steel Railing and posts not shown for clarity)

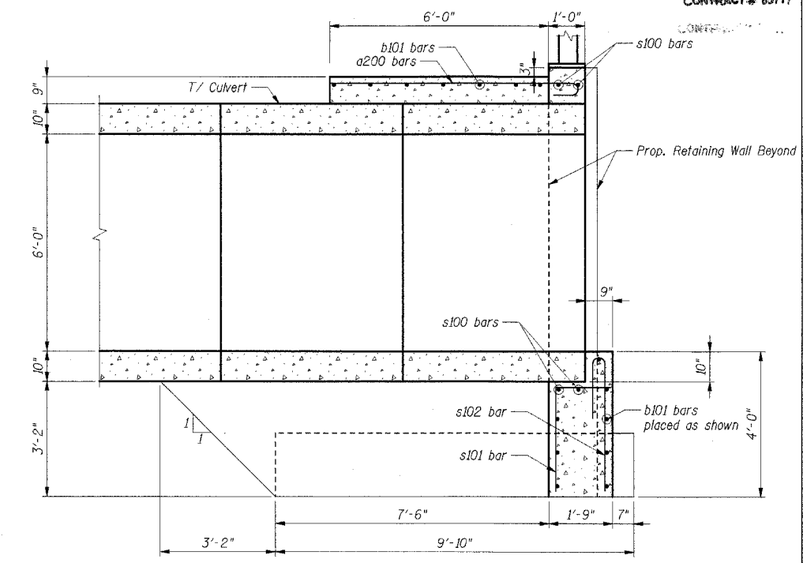

SECTION A-A

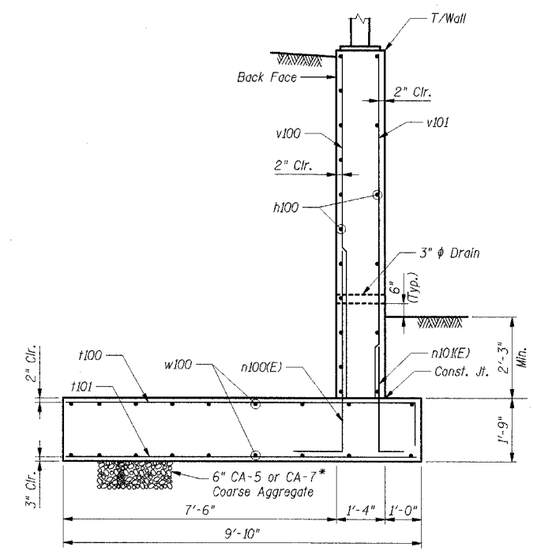

*Included in the cost of Box Culvert End Sections

SECTION B-B

BAR LIST

Bar	No.	Size	Length	Shape
a200	25	#4	7'-2"	
b101	15	#4	23'-3"	
h100	44	#4	11'-8"	
n100(E)	26	#8	7'-4"	
n101(E)	26	#4	3'-10"	
s100	4	#4	35'-3"	
s101	26	#4	3'-11"	
s102	26	#4	5'-8"	
t100	26	#7	10'-6"	
t101	26	#7	9'-4"	
v100	26	#8	9'-11"	
v101	26	#4	9'-11"	
w100	52	#4	11'-6"	

Item	Unit	Total
Reinforcement Bars**	Lbs.	3,270
Reinforcement Bars, ** Epoxy Coated	Lbs.	580
Concrete Structures**	Cu. Yd.	40.0

** For information only. Cost included in Box Culvert End Sections

BILL OF MATERIAL

Item	Unit	Total
Box Culvert End Sections	Each	1

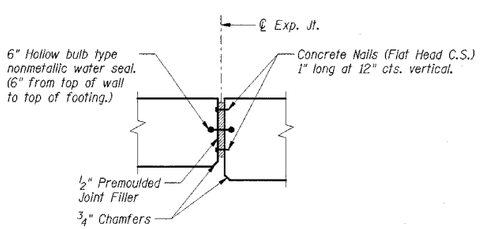

EXPANSION JOINT DETAIL

Included in cost of Box Culvert End Sections (Typ.)

Bar	A	B
n100(E)	6'-0"	1'-4"
n101(E)	3'-2"	0'-8"
s101	2'-8"	1'-3"
t100	9'-4"	1'-2"

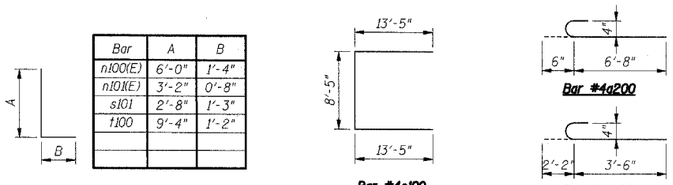

Notes:

1. Cover from face of concrete to reinforcement shall be 3" for surfaces formed against earth and 2" for other surfaces, unless shown otherwise.
2. The cost of concrete, reinforcing bars, and all appurtanent work to construct concrete headwalls/collars and wingwalls is included in the item Box Culvert End Sections.
3. All vertical bars in wall stem start 2" from construction joints and expansion joints (U.N.O.)
4. All edges shall have a ¾" chamfer.
5. Reinforcement bars designated (E) shall be epoxy coated.
6. E.F. indicates each face, B.F. indicates back face, F.F. indicates front face.
7. Space reinforcement in headwall/collar to miss threaded anchor rods for Steel Railing.
8. For Steel Bridge Rail details, see Sht. S-6.

SHT. S-3

REVISIONS	
NAME	DATE

LOCKPORT TOWNSHIP
F.A.U. (547) OAK STREET OVER FIDDYMENT CREEK
WILL COUNTY

WINGWALL DETAILS

SCALE:
DRAWN BY: FD
DATE: 7/22/04
CHECKED BY: JRH

TENG
TENG & ASSOCIATES, INC.
ENGINEERS/ARCHITECTS/PLANNERS
305 N. MICHIGAN AVE. CHICAGO, IL 60601
TELEPHONE: 312/616 0000

KARNATMR

..\GPE0000GE.DGN,..\DET00004.DGN,..\TT00000SLDGN,..\DET00004.DGN,..\DET0000GE.DGN
8-31-2004,1:42:45 S:\DOCUMENT\02332502\STRUCT\DGN\DET00004.DGN