F.A.U. ROUTE NO.	SECTION	COUNTY	TOTAL SHEETS	SHEET NO.
3737	97-00072-00-FP	COOK	66	41
STA. 53+50	TO STA. 84+55			
FED. ROAD DIST. NO.		ILLINOIS	FED AID PROJECT	
C-91-313-02			M-8003 (235)	

CONTRACT NO. 83772

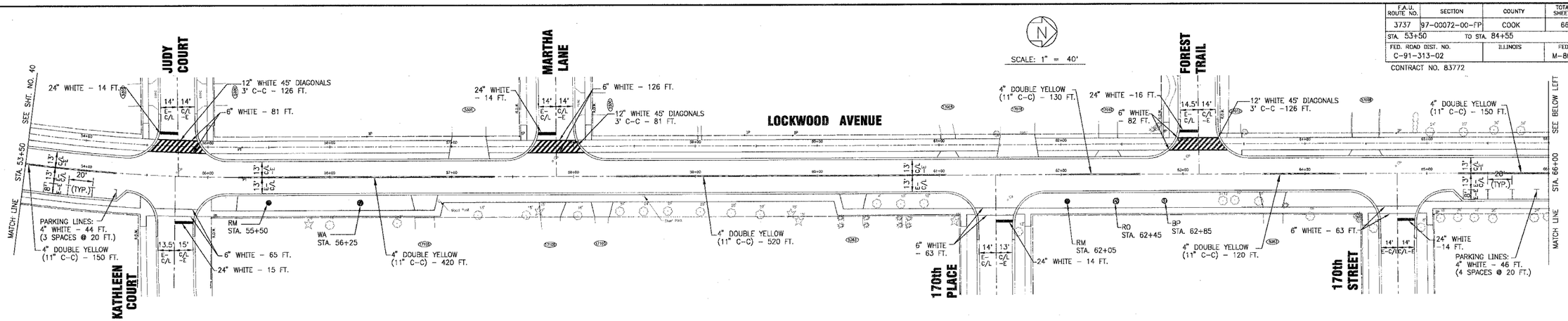

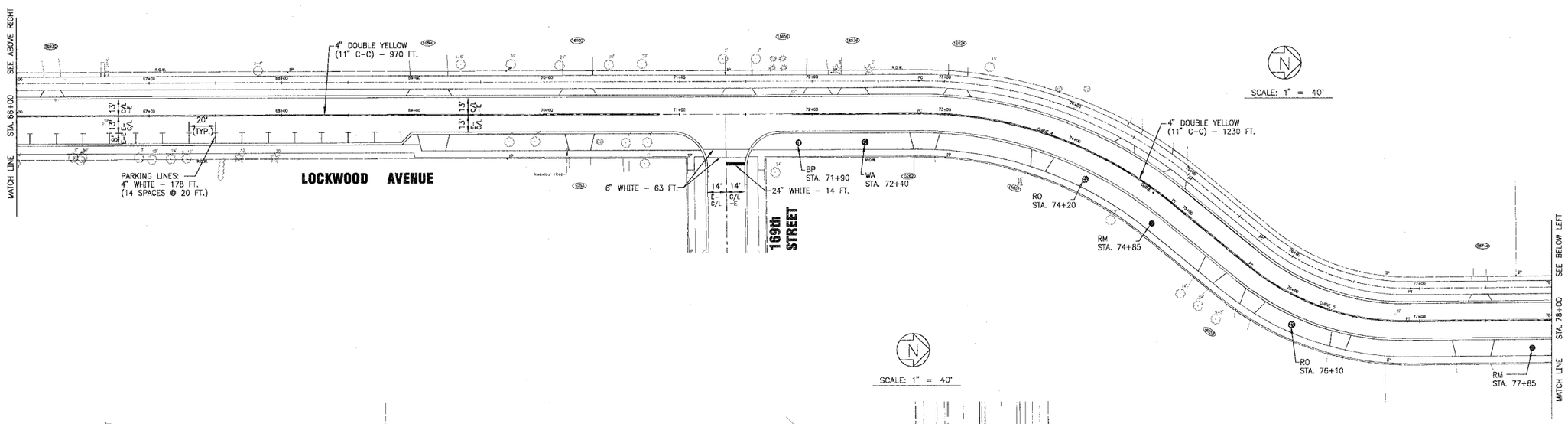

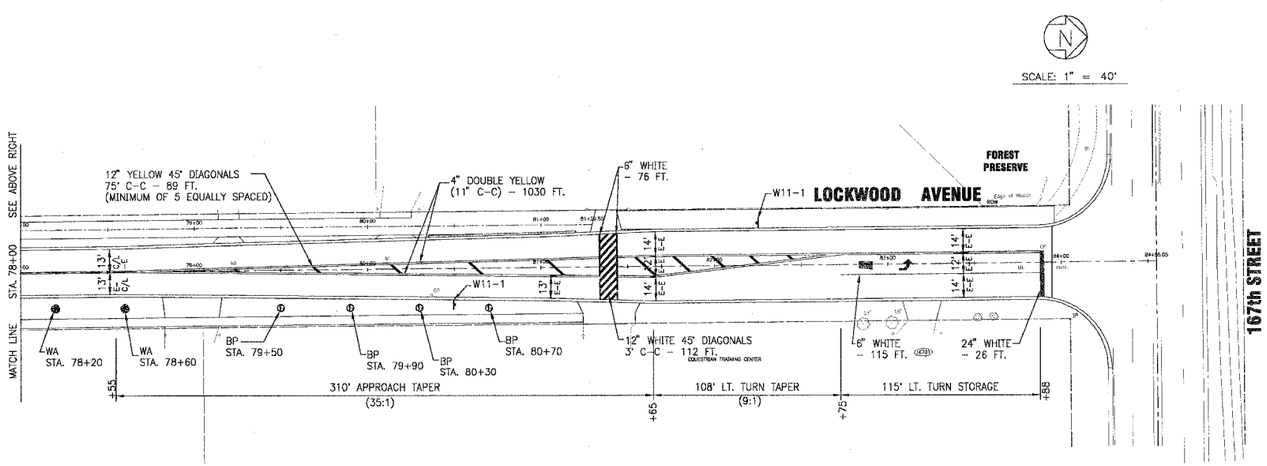

CONSULTANTS	REV. NO.	DATE	DESCRIPTION
	1	8-17-04	PER I.D.O.T. AND CITY REVIEW

* REFER TO EQUIPMENT MANUFACTURER'S SHOP DRAWINGS

3036-STRP.DWG UKB 25/AUG/04 07:30

BAXTER & WOODMAN Consulting Engineers

Baxter & Woodman
Crystal Lake, Illinois 815.459.1260
Burlington, Wisconsin 262.763.7834
Mokena, Illinois 708.478.2090
DeKalb, Illinois 815.787.3111
Crayslake, Illinois 847.223.5068
Rockford, Illinois 815.489.1551

CITY OF OAK FOREST, ILLINOIS
LOCKWOOD AVENUE IMPROVEMENTS

PAVEMENT MARKING AND AND LANDSCAPING PLAN - LOCKWOOD AVENUE STA. 53+50 TO STA. 84+55

DESIGNED BY	SCALE
NJP	HORIZ: 1"=40'
DRAWN BY	PROJECT NO.
UKB	030036
CHECKED BY	SHEET NO.
LDH	
DATE	
6-08-04	41 OF 66

COPYRIGHT © 2004, BY BAXTER & WOODMAN, INC. (UNIT OF ILLINOIS - PROFESSIONAL DESIGN FIRM 184-001161) - UNPUBLISHED WORK - ALL RIGHTS RESERVED