F.A.U. ROUTE NO.	SECTION	COUNTY	TOTAL SHEETS	SHEET NO.
3737	97-00072-00-FP	COOK	66	10
STA.	TO STA.			
FED. ROAD DIST. NO. C-91-313-02		ILLINOIS	FED AID PROJECT M-8003 (235)	

CONTRACT NO. 83772

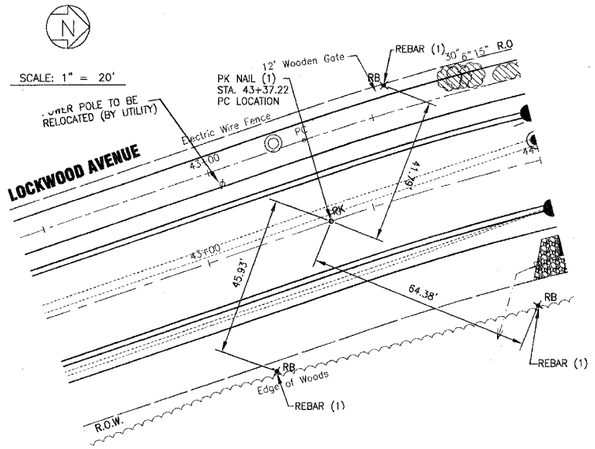

TIES ON LOCKWOOD AVENUE - PC STA. 43+37.22

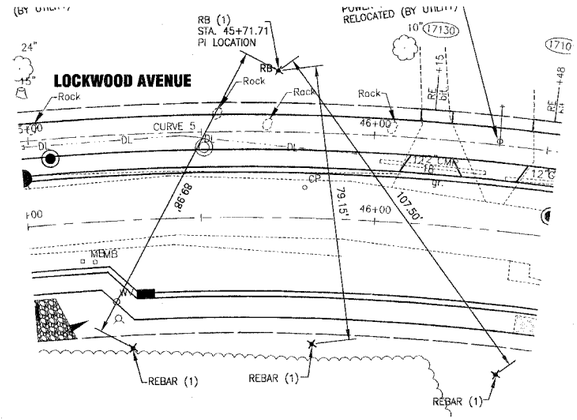

TIES ON LOCKWOOD AVENUE - PI STA. 45+71.71

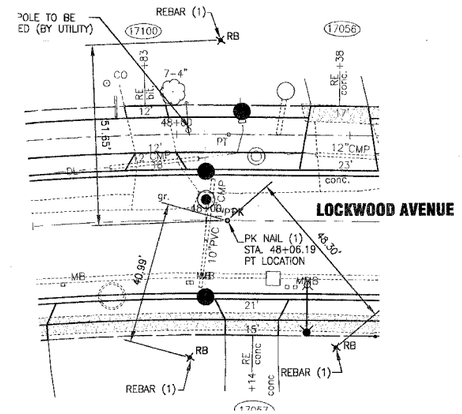

TIES ON LOCKWOOD AVENUE - PT STA. 48+06.19

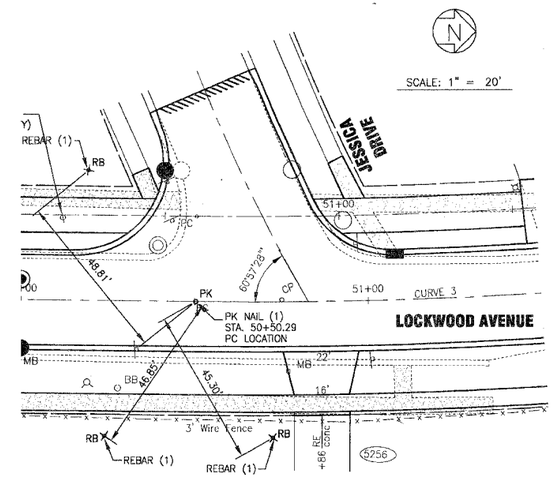

TIES ON LOCKWOOD AVENUE - PC STA. 50+50.29

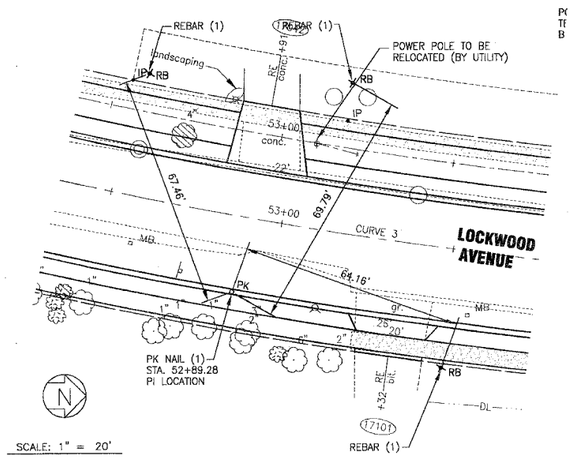

TIES ON LOCKWOOD AVENUE - PI STA. 52+89.28

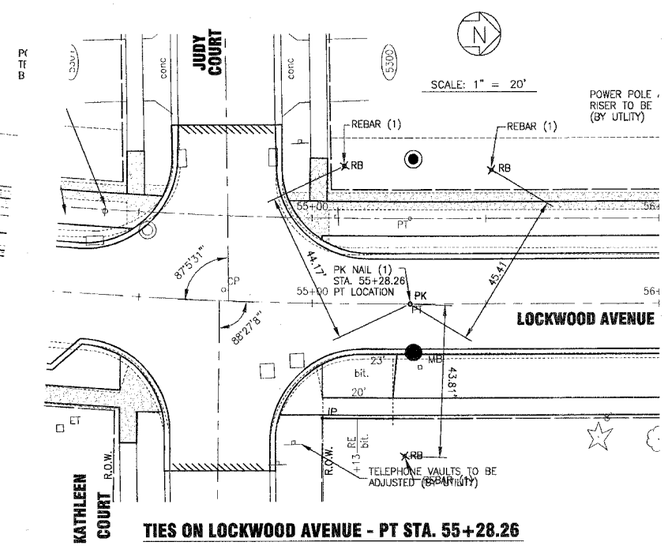

TIES ON LOCKWOOD AVENUE - PT STA. 55+28.26

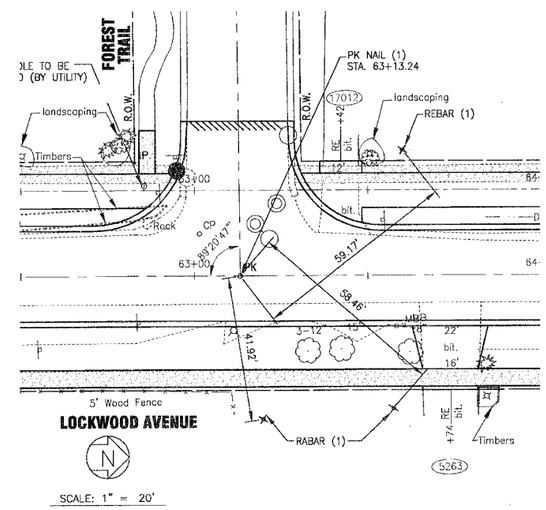

TIES ON LOCKWOOD AVENUE - STA. 63+13.24

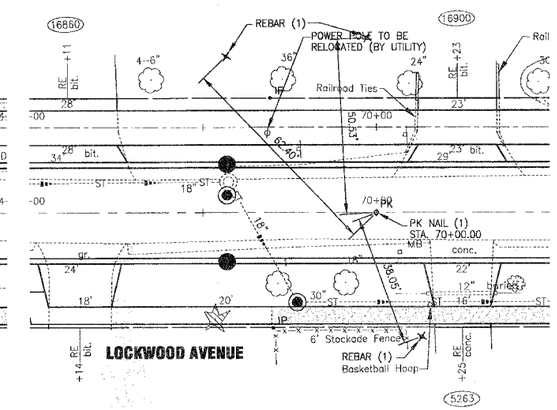

TIES ON LOCKWOOD AVENUE - STA. 70+00.00

SCALE: 1" = 20'

CONSULTANTS	REV. NO.	DATE	DESCRIPTION
	1	8-17-04	PER I.D.O.T. AND CITY REVIEW

* REFER TO EQUIPMENT MANUFACTURER'S SHOP DRAWINGS

LCKWD-TIES.DWG UKB 13/JUN/04 22:25

BAXTER & WOODMAN Consulting Engineers

Baxter & Woodman
Crystal Lake, Illinois 815.459.1260
Burlington, Wisconsin 262.763.7834
Mokena, Illinois 708.478.2090
DeKalb, Illinois 815.787.3111
Crayslake, Illinois 847.223.5088
Rockford, Illinois 815.489.1551

CITY OF OAK FOREST, ILLINOIS
LOCKWOOD AVENUE IMPROVEMENTS

LOCKWOOD AVENUE ALIGNMENT AND TIES

DESIGNED BY	SCALE
NJP/MCU	AS NOTED
DRAWN BY	PROJECT NO.
UKB	030036
CHECKED BY	SHEET NO.
LDH	10 OF 66
DATE 6-08-04	

COPYRIGHT © 2004, BY BAXTER & WOODMAN, INC. STATE OF ILLINOIS - PROFESSIONAL DESIGN FIRM LICENSE NO. - 184-001217 EXPIRES 4/30/2005