F. A. RTE.	SECTION	COUNTY	TOTAL SHEETS	SHEET NO.
1380	00-00083-00-PV	DuPAGE	94	64
STA.		TO STA.		
FED. ROAD DIST. NO.	ILLINOIS	FED. AID PROJECT		

83676

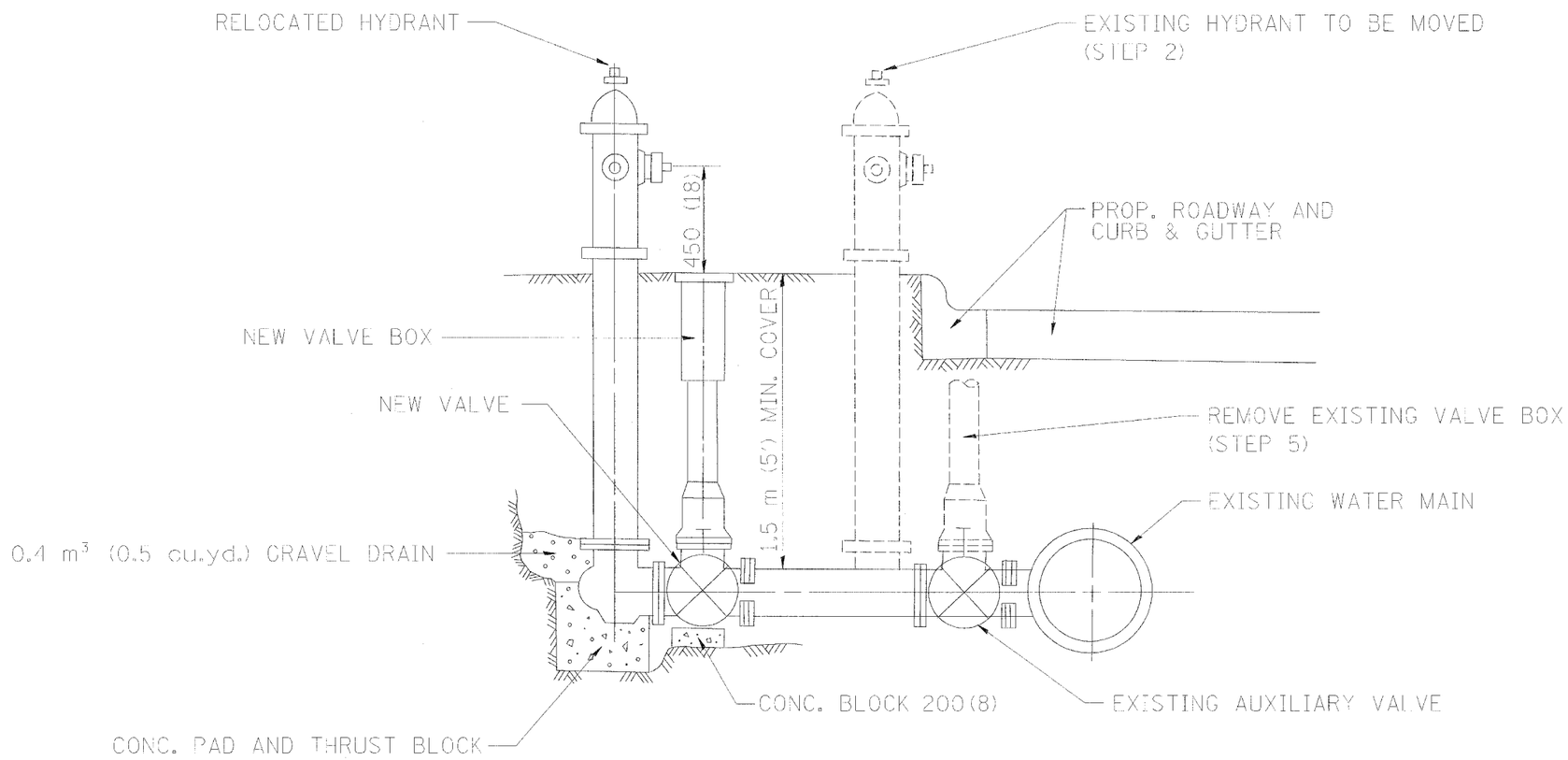

SEQUENCE OF CONSTRUCTION:

1. CLOSE EXISTING VALVE.
2. REMOVE EXISTING HYDRANT.
3. INSTALL HYDRANT EXTENSION AND NEW VALVE.
4. RELOCATE EXISTING HYDRANT.
5. OPEN EXISTING VALVE, REMOVE BOX.
6. BACKFILL.
7. FLUSH AND TEST FOR CHLORIDE RESIDUAL AND PROVIDE TEST.

ALL WORK TO BE DONE IN ACCORDANCE WITH ARTICLE 564 OF THE STANDARD SPECIFICATIONS. NEW VALVE AND BOX SHALL BE SAME MAKE AND MODEL AS EXISTING.

FIRE HYDRANT TO BE MOVED

ALL DIMENSIONS ARE IN MILLIMETERS (INCHES) UNLESS OTHERWISE SHOWN.

REVISIONS	
NAME	DATE
R. SHAH	09/09/94
R. SHAH	10/25/94

ILLINOIS DEPARTMENT OF TRANSPORTATION

FIRE HYDRANT TO BE MOVED

SCALE: NONE

DATE 10/18/2002

DRAWN BY

CHECKED BY

BD500-03 (BD-36)

REVISION DATE: 10/25/94

DATE-TIME
DGN-SPEC
V7-BD36