FAU RTE	SECTION	COUNTY	TOTAL SHEETS	SHEET NO.
1380	00-00083-00-PV	DuPAGE	94	35
STA.		TO STA.		
FED. ROAD DIST. NO. 7		ILLINOIS	FED. AID PROJECT	

83676

SCHEDULE OF QUANTITIES (QUANTITY 0 INDICATES ITEM NOT REQUIRED AT THE INTERSECTION)

QUANTITY	UNIT	ITEM
42	FOOT	CONDUIT IN TRENCH, 1 1/2" DIA., GALVANIZED STEEL
469	FOOT	CONDUIT IN TRENCH, 2" DIA., GALVANIZED STEEL
135	FOOT	CONDUIT IN TRENCH, 2 1/2" DIA., GALVANIZED STEEL
46	FOOT	CONDUIT IN TRENCH, 4" DIA., GALVANIZED STEEL
0	FOOT	CONDUIT IN TRENCH, 5" DIA., GALVANIZED STEEL
46	FOOT	CONDUIT PUSHED, 2" DIA., GALVANIZED STEEL
1,255	FOOT	CONDUIT PUSHED, 2 1/2" DIA., GALVANIZED STEEL
301	FOOT	CONDUIT PUSHED, 4" DIA., GALVANIZED STEEL
0	FOOT	CONDUIT PUSHED, 5" DIA., GALVANIZED STEEL
5	EACH	HANDHOLE
4	EACH	HEAVY-DUTY HANDHOLE
1	EACH	DOUBLE HANDHOLE
1	EACH	TRANSCEIVER - FIBER OPTIC
512	FOOT	FIBER OPTIC CABLE IN CONDUIT, NO. 62.5/125, MM12F SM12F
0	FOOT	ELECTRIC CABLE IN CONDUIT, SIGNAL NO. 14 2C
0	FOOT	ELECTRIC CABLE IN CONDUIT, SIGNAL NO. 14 3C
926	FOOT	ELECTRIC CABLE IN CONDUIT, SIGNAL NO. 14 5C
2,141	FOOT	ELECTRIC CABLE IN CONDUIT, SIGNAL NO. 14 7C
2,097	FOOT	ELECTRIC CABLE IN CONDUIT, LEAD-IN, NO. 14 1 PAIR
71	FOOT	ELECTRIC CABLE IN CONDUIT, SERVICE, NO. 6 2 C
4	EACH	TRAFFIC SIGNAL POST, GALVANIZED STEEL 16 FT.
2	EACH	STEEL COMBINATION MAST ARM ASSEMBLY AND POLE 22 FT.
1	EACH	STEEL COMBINATION MAST ARM ASSEMBLY AND POLE 34 FT.
1	EACH	STEEL COMBINATION MAST ARM ASSEMBLY AND POLE 36 FT.
16	FOOT	CONCRETE FOUNDATION, TYPE A
4	FOOT	CONCRETE FOUNDATION, TYPE D
60	FOOT	CONCRETE FOUNDATION, TYPE E 30-INCH DIAMETER
0	EACH	DRILL EXISTING HANDHOLE
3	EACH	SIGNAL HEAD ,LED, 1-FACE, 3-SECTION, BRACKET MOUNTED, RETROFIT
3	EACH	SIGNAL HEAD ,LED, 1-FACE, 3-SECTION, MAST-ARM MOUNTED, RETROFIT
5	EACH	SIGNAL HEAD ,LED, 1-FACE, 5-SECTION, BRACKET MOUNTED, RETROFIT
5	EACH	SIGNAL HEAD ,LED, 1-FACE, 5-SECTION, MAST-ARM MOUNTED, RETROFIT
0	EACH	PEDESTRIAN SIGNAL HEAD, LED, 2-FACE, BRACKET MOUNTED, RETROFIT
8	EACH	TRAFFIC SIGNAL BACKPLATE
12	EACH	INDUCTIVE LOOP DETECTOR
819	FOOT	DETECTOR LOOP, TYPE I
1	EACH	TEMPORARY TRAFFIC SIGNAL INSTALLATION
2	EACH	LIGHT DETECTOR, TYPE I
1	EACH	LIGHT DETECTOR AMPLIFIER
1	EACH	FULL-ACTUATED CONTROLLER AND TYPE IV CABINET, SPECIAL
0	EACH	PEDESTRIAN PUSH-BUTTON
1	EACH	SERVICE INSTALLATION - POLE MOUNTED
4,062	FOOT	TRENCH AND BACKFILL FOR ELECTRICAL WORK
1	EACH	REMOVE EXISTING TRAFFIC SIGNAL EQUIPMENT
10	EACH	REMOVE EXISTING HANDHOLE
9	EACH	REMOVE EXISTING CONCRETE FOUNDATION
621	FOOT	ELECTRIC CABLE IN CONDUIT, GROUNDING, NO. 6 1C
518	FOOT	ELECTRIC CABLE IN CONDUIT NO. 20 3/C, TWISTED, SHIELDED

NOTES:

1. THE TRAFFIC SIGNAL CONTROL EQUIPMENT FOR THIS PROJECT, SHALL BE "ECONOLITE" TO MATCH THE EXISTING ADJACENT SYSTEM.
2. EQUIPMENT GROUND CONDUCTOR (GREEN COLOR CODED) SPLICE TO FRAME AND COVER IS REQUIRED FOR ALL HANDHOLES OR DOUBLE HANDHOLES THAT CARRY SIGNAL CABLES AND SERVICE CABLES.
3. THE END OF THE TRACER CABLE SHALL BE CONTINUOUS AND EXTEND INTO THE CONTROLLER CABINET.

"IDOT TRAFFIC SIGNAL INSTALLATION ELECTRICAL SERVICE REQUIREMENTS"

TYPE	NO. LAMPS	WATTAGE- LED	% OPERATION	TOTAL WATTAGE
SIGNAL-				
RED	16	17	0.5	136
YELLOW	16	25	0.25	100
GREEN	16	15	0.25	60
				0
ARROW	24	12	0.1	29
PED SIGNAL		25	1	0
CONTROLLER	1	100	1	100
ILLUM SIGN			0.05	0
FLASHER			0.5	0
			TOTAL=	425

ENERGY COSTS TO: VILLAGE OF ADDISON

ENERGY SUPPLY CONTACT: MS. KIM GARLAND
PHONE: (630) 424-5705
COMPANY: COMMONWEALTH EDISON

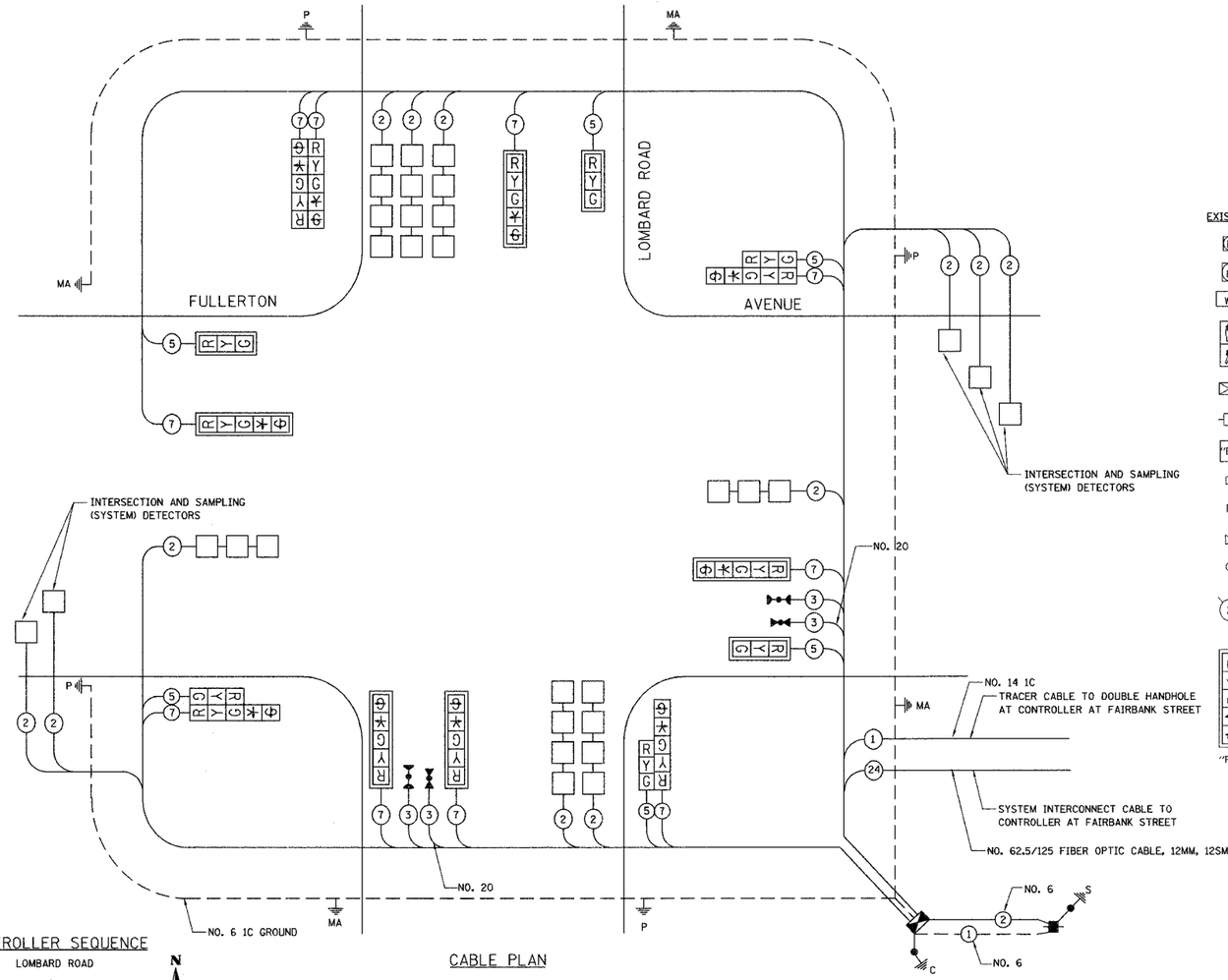

CABLE PLAN

CONTROLLER SEQUENCE

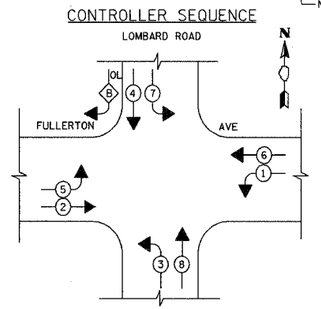

PHASE DESIGNATION DIAGRAM

PROPOSED EMERGENCY VEHICLE PREEMPTORS		
EMERGENCY VEHICLE PREEMPTOR	3	4
MOVEMENT	⇄	↓↑

EMERGENCY VEHICLE PREEMPTION SEQUENCE

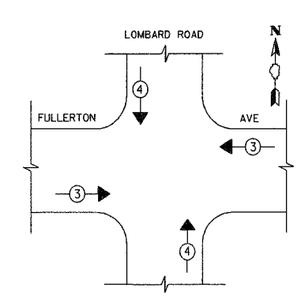

CABLE PLAN LEGEND

EXISTING	PROPOSED	
R	R	8" TRAFFIC SIGNAL SECTION
R	R	12" TRAFFIC SIGNAL SECTION
W "E"	W	12" PEDESTRIAN SIGNAL SECTION
"E"		12" PEDESTRIAN SIGNAL SECTION
		CONTROLLER CABINET
		SERVICE INSTALLATION
"E"		VEHICLE DETECTOR, INDUCTION LOOP
		MAGNETIC DETECTOR
		EMERGENCY VEHICLE LIGHT DETECTOR
		CONFIRMATION BEACON
"E"		PUSHBUTTON DETECTOR
2	2	DENOTES NUMBER OF CONDUCTORS ALL CABLE NO. 14 EXCEPT AS INDICATED ALL LOOP DETECTOR CABLE TO BE SHIELDED
R Y G "E" "P"	R Y G "P"	SIGNAL FACE WITH BACKPLATE "P" INDICATES PROGRAMMED HEAD "E" INDICATES EXISTING SIGNAL HEAD OR EXISTING PEDESTRIAN SIGNAL HEAD
1		NO. 14 1C TRACER CABLE
24		FIBER OPTIC CABLE NO. 62.5/125 12F MULTIMODE AND 12F SINGLE MODE
		GROUND ROD 3/4"
		GROUND CABLE, NO. 6 1C
C		CONTROLLER
H		HANDHOLE
MA		MAST ARM
P		POST
S		SERVICE

OVERLAP LETTER		PERMISSIVE PHASE		PROTECTED PHASE
B	=	4	+	5

FOUNDATION (DEPTH)	m (FT)	CABLE SLACK- HORIZONTAL	m (FT)	CABLE SLACK- VERTICAL	m (FT)
TYPE A- POST	1.2 (4)	HANDHOLE	2.0 (6.5)	ALL FOUNDATIONS	1.0 (3.5)
TYPE D- CONTROLLER	1.2 (4)	DOUBLE HANDHOLE	4.0 (13)	MAST ARM (L) POLE	6m+L-0.6m=
TYPE E- MAST ARM POLE (30")	4.6 (15)	SIGNAL POST	2.0 (1.0)		(20'+L-2')=
		CONTROLLER CABINET	0.5 (1.0)	BRACKET MOUNTED	4.0 (13.0)
		FIBER OPTIC	4.0 (13)	PEDESTRIAN PUSH BUTTON	1.2 (4.0)
		ELECTRIC SERVICE	0.5 (1.0)	ELECTRIC SERVICE	4.1 (13.5)
		GROUND CABLE	0.5 (1.0)	SERVICE TO GROUND	4.1 (13.5)
				POST MOUNTED	1.8 (6.0)

LEGEND

- DUAL ENTRY PHASE
- OL OVERLAP
- ✱ NUMBER REFERS TO ASSOCIATED PHASE

REVISIONS	
NAME	DATE

ILLINOIS DEPARTMENT OF TRANSPORTATION

CABLE PLAN
SCHEDULE OF QUANTITIES
SEQUENCE OF OPERATIONS

FULLERTON AVENUE AND LOMBARD ROAD

SCALE: NONE

DATE: 07-18-03
DRAWN BY: SRS
CHECKED BY: SRF