CONTRACT NO. 83664

EARTH TECH
A tyco INTERNATIONAL LTD. COMPANY

F.A.U. RTE.	SECTION	COUNTY	TOTAL SHEETS	SHEET NO.
	96-00099-00-BR	DUPAGE	62	50
STA. 13+25.00	TO STA. 16+55.00			
FED. ROAD DIST. NO.	ILLINOIS	FED. AID PROJECT		

SHEET 519 OF 522
Contr. 83664

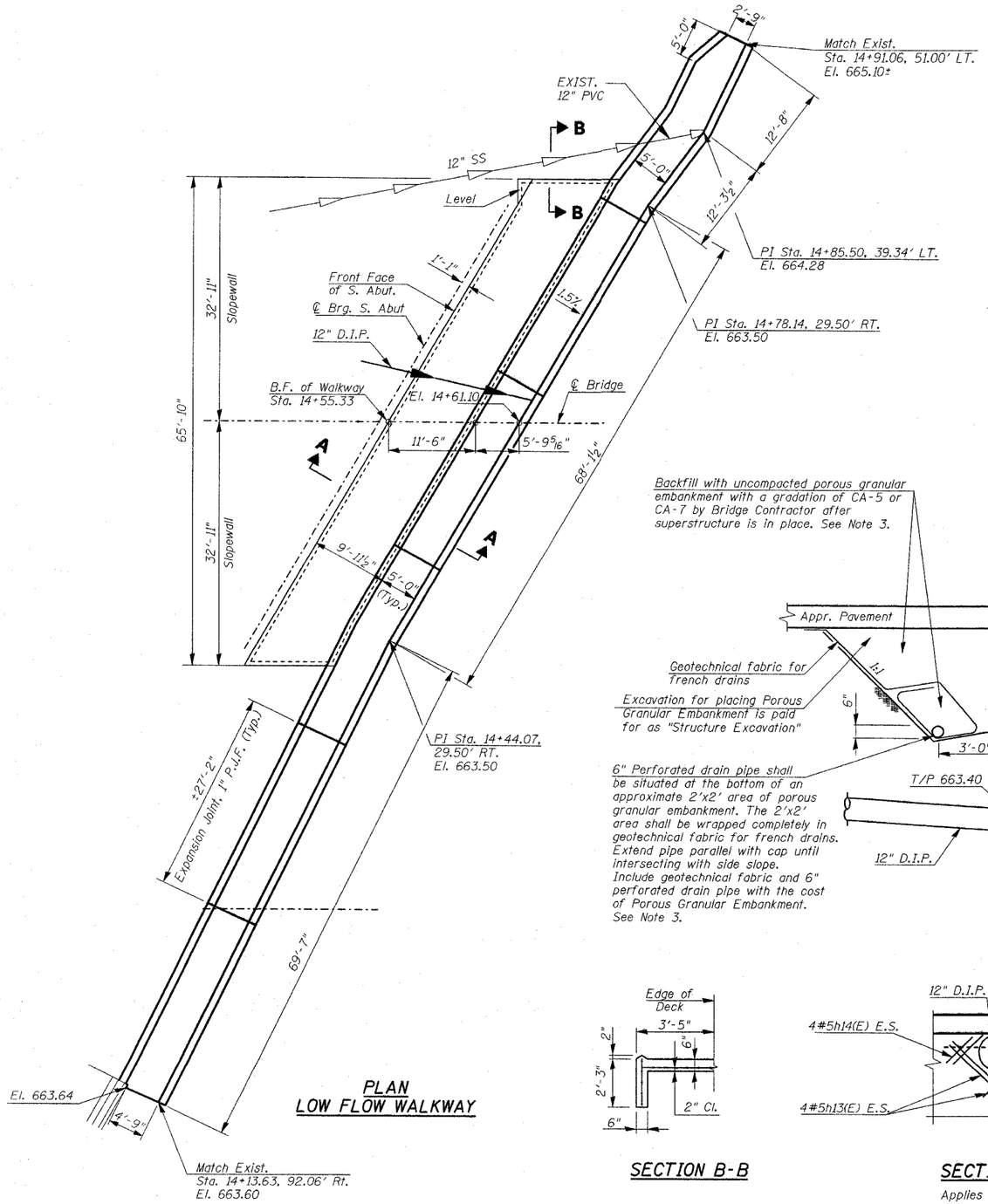

PLAN
LOW FLOW WALKWAY

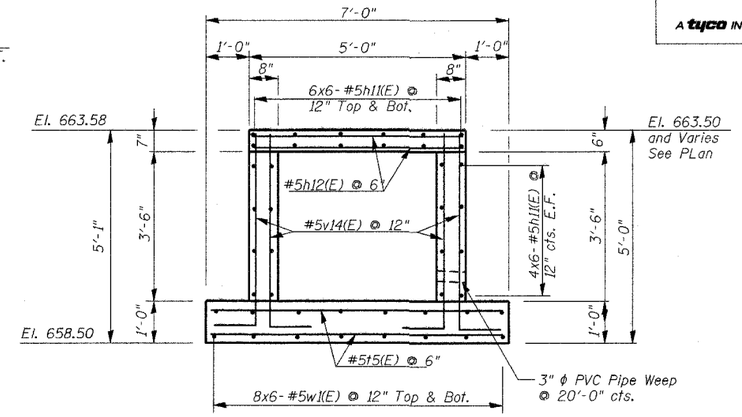

TYPICAL SECTION

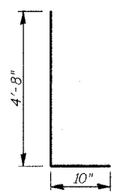

BAR v14(E)

BILL OF MATERIAL

Bar	No.	Size	Length	Shape
h11(E)	168	#5	26'-8"	
h12(E)	325	#5	4'-8"	
h13(E)	8	#5	2'-0"	
h14(E)	8	#5	1'-2"	
t5(E)	326	#5	6'-8"	
v14(E)	652	#5	5'-6"	L
w1(E)	96	#5	26'-8"	
Concrete Structures *			Cu. Yd.	88
Reinforcement Bars, Epoxy Coated *			Pound	14,958
Porous Granular Embankment			Cu. Yd.	119
Concrete Slopewall (Special)			Sq. Ft.	1,209
Porous Granular Backfill *			Cu. Yd.	77
Stone Riprap, Class A5 *			Cu. Yd.	36
Anti-Graffiti Coating			Sq. Ft.	2,022

Reinforcement Bars designated (E) shall be epoxy coated.

* Low Flow Walk quantities are shown for information only and are included in the pay item "Low Flow Walk (Special)". See Special Provisions.

NOTES:

1. Low Flow Walk Bill of Material quantities do not include work to be done by others in the future.
2. Structure excavation for Low Flow Walk included with the quantity and cost for South Abutment Structure Excavation.
3. Slopewall surface shall be colored and imprinted with Bomanite Flagstone stone pattern or approved similar. Cost of architectural finishes shall be incidental to pay item Concrete Slopewall. Work shall be performed as described in concrete slopewall Special Provision.

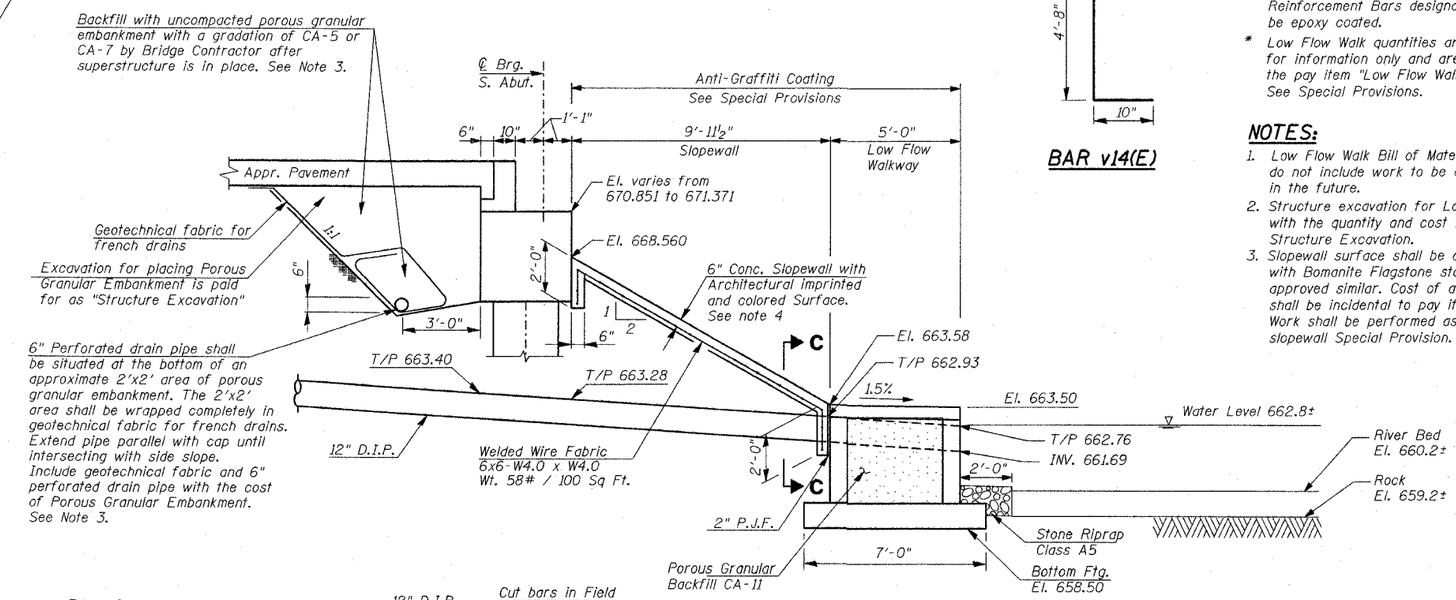

SECTION A-A

SECTION B-B

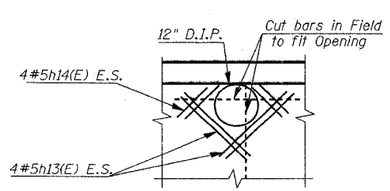

SECTION C-C

Applies to 12" D.I.P. and to existing 12" PVC if stays in place.

REVISIONS NAME	DATE

CITY OF NAPERVILLE
LOW FLOW WALK AND SLOPEWALL DETAILS
MAIN STREET BRIDGE OVER WEST BRANCH DUPAGE RIVER
STRUCTURE NO. 022-6755 - STA. 15+00.00

SCALE: DRAWN BY JHR
DATE JULY 9, 2004 CHECKED BY SCD

DATE =Tue Jul 13 09:19:50 2004 DGN =L:\work\65154\cadd\drawings\Bridge\Walk1.dgn