Contr. 83664

CONTRACT NO. 83664

Hatched area to be poured after superstructure falsework has been removed. Quantity of concrete included with Concrete Structure.

EARTH TECH — A tyco INTERNATIONAL LTD. COMPANY

F.A.U. RTE.	SECTION	COUNTY	TOTAL SHEETS	SHEET NO.
	96-00099-00-BR	DUPAGE	62	46
STA. 13+25.00		TO STA. 16+55.00		
FED. ROAD DIST. NO.	ILLINOIS	FED. AID PROJECT		

SHEET S15 OF S22

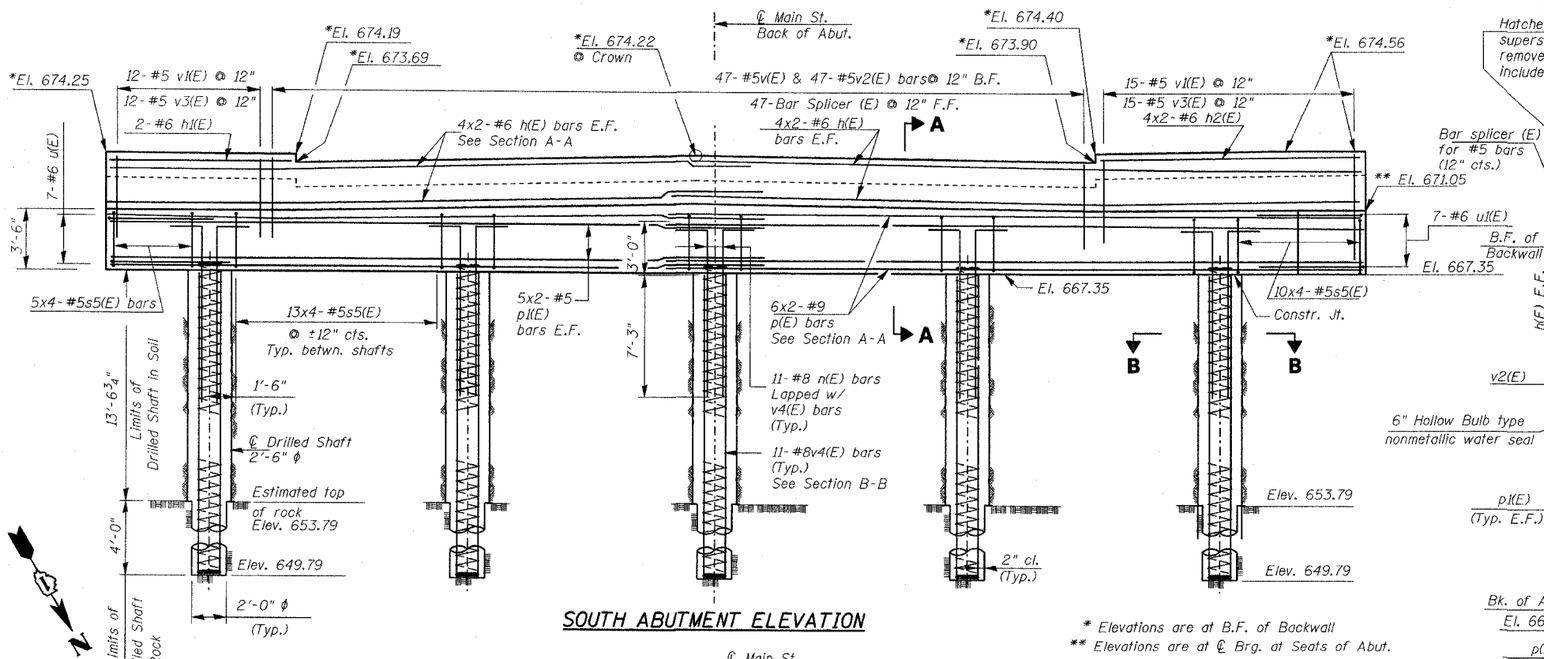

SOUTH ABUTMENT ELEVATION

* Elevations are at B.F. of Backwall
** Elevations are at ℄ Brg. at Seats of Abut.

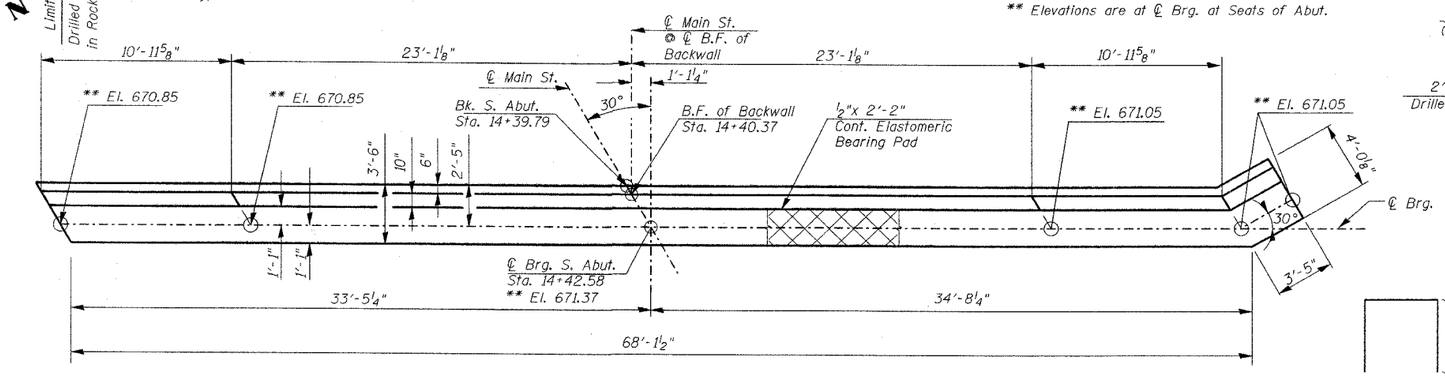

TOP VIEW

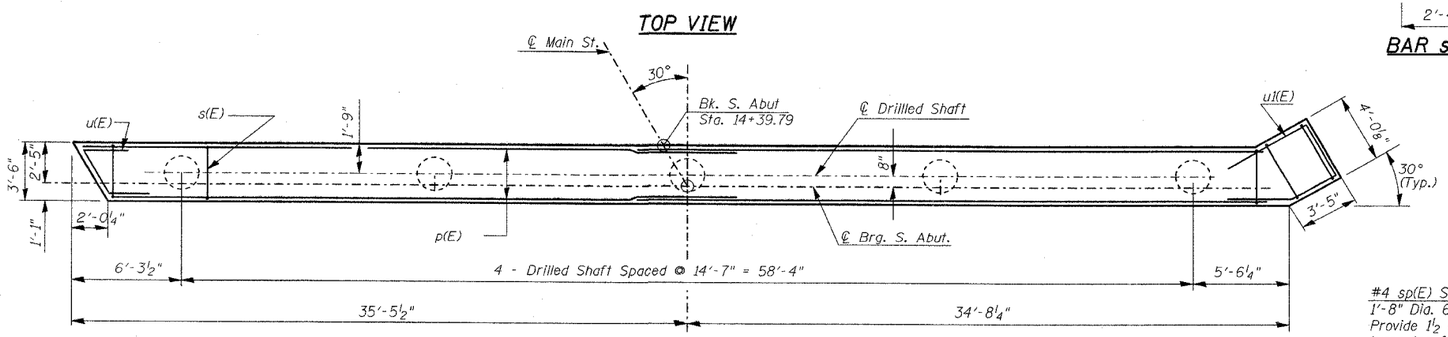

PLAN

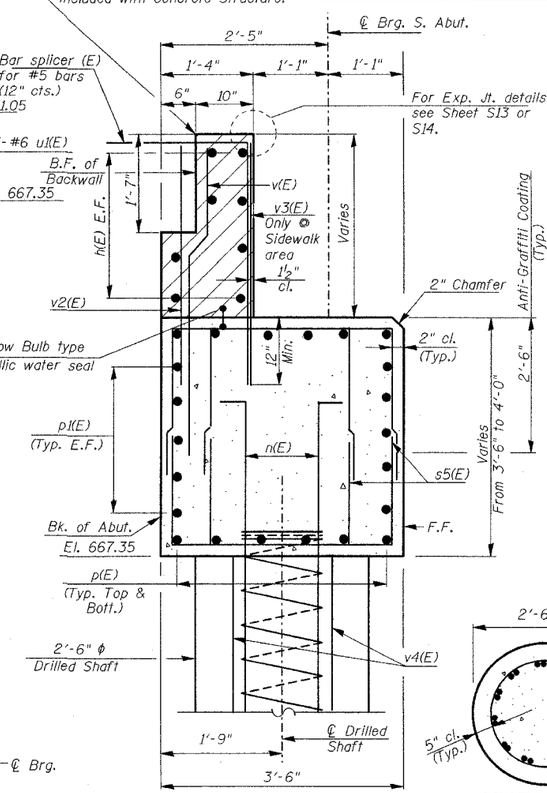

SECTION A-A

BILL OF MATERIAL

Bar	No.	Size	Length	Shape
h(E)	16	#6	35'-4"	
h1(E)	2	#6	10'-8"	
h2(E)	2	#6	13'-11"	
n (E)	55	#8	12'-1"	
p (E)	24	#9	36'-9"	
p1(E)	20	#5	35'-2"	
s5(E)	268	#5	8'-4"	
sp(E)	5	#4	200'-0"	
u (E)	7	#6	15'-8"	
u1(E)	7	#6	15'-0"	
v(E)	47	#5	5'-10"	
v1(E)	27	#5	6'-7"	
v2(E)	47	#5	5'-0"	
v3(E)	27	#5	6'-0"	
v4(E)	55	#8	17'-3"	
Bar Splicers			Each	47
Concrete Structures			Cu. Yd.	46
Reinforcement Bars, Epoxy Coated			Pound	13,156
Structure Excavation			Cu. Yd.	150
Drilled Shaft in Soil, 30"			Foot	68
Drilled Shaft in Rock, 24"			Foot	20
Anti-Graffiti Coating			Sq. Ft.	170
Bridge Seat Sealer			Sq. Ft.	160

TYP. MIN. LAP SPLICE

#5 = 2'-2"
#6 = 2'-7"
#9 = 5'-9"

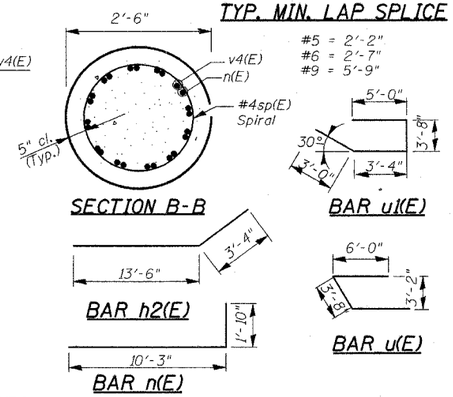

SECTION B-B — BAR u1(E) — BAR h2(E) — BAR u(E) — BAR n(E)

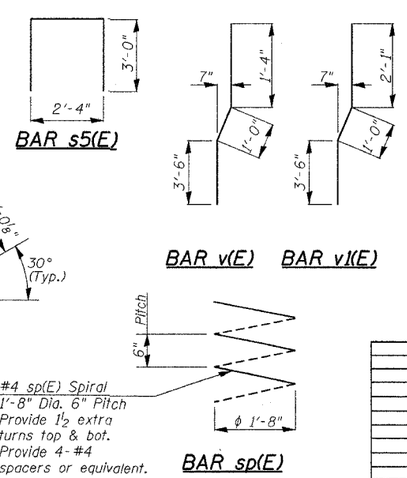

BAR s5(E) — BAR v(E) — BAR v1(E)

#4 sp(E) Spiral
1'-8" Dia. 6" Pitch
Provide 1½ extra turns top & bot.
Provide 4-#4 spacers or equivalent.

BAR sp(E)

NOTES:

1. The quantities and detailing are based on the estimated elevations shown on the plans. The actual elevations may differ at each shaft and corresponding adjustments shall be made to the drilled shaft and reinforcement quantities and payment limits.
2. Reinforcement bars designated (E) shall be epoxy coated.
3. Provide 1½ extra turns top and bottom of each drilled shaft. Extend spiral 2" into abutment or wingwall cap. Provide min. 4-#15 spacers or equivalent.
4. For South Abutment Drainage Details see Sheet S19.

REVISIONS	
NAME	DATE

CITY OF NAPERVILLE

SOUTH ABUTMENT DETAILS

MAIN STREET BRIDGE OVER
WEST BRANCH DUPAGE RIVER
STRUCTURE NO. 022-6755 - STA. 15+00.00

SCALE:
DATE JULY 9, 2004
DRAWN BY JHR
CHECKED BY SCD

DATE =Tue Jul 13 09:18:00 2004 DGN =L:\work\65154\cadd\drawings\Bridge\sAbut.dgn