CONTRACT NO. 83664

EARTH TECH
A tyco INTERNATIONAL LTD. COMPANY

F.A.U. RTE.	SECTION	COUNTY	TOTAL SHEETS	SHEET NO.
	96-00099-00-BR	DUPAGE	62	42
STA. 13+25.00	TO STA. 16+55.00			
FED. ROAD DIST. NO.	ILLINOIS	FED. AID PROJECT		

SHEET S11 OF S22
Contr. 83664

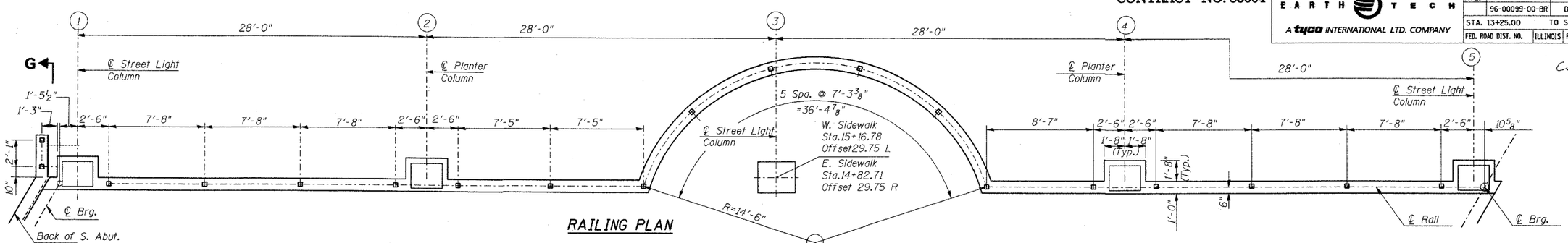

RAILING PLAN

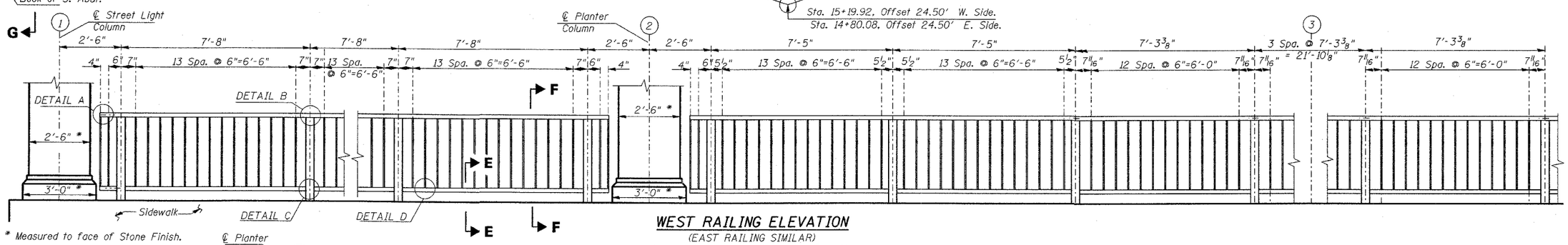

* Measured to face of Stone Finish.

WEST RAILING ELEVATION

(EAST RAILING SIMILAR)
Horizontal dimensions given along ℄ Railing

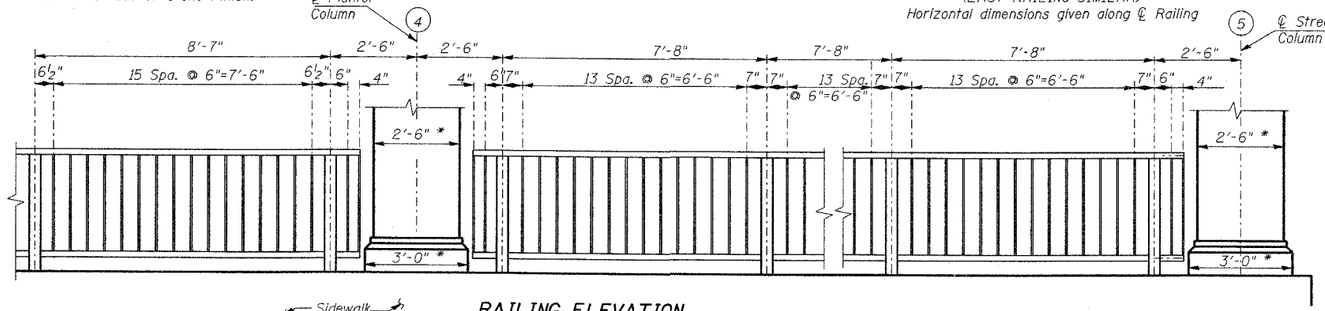

RAILING ELEVATION

Horizontal dimensions given along ℄ Railing

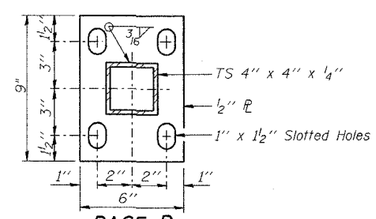

BASE ℙ

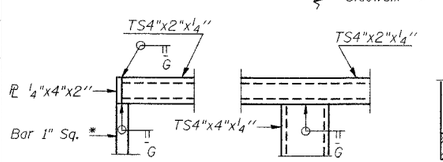

DETAIL A

DETAIL B

* Chamfer all 4 edges of Bars 1" Sq.

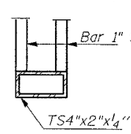

SECTION E-E

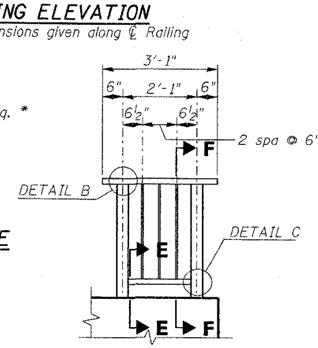

SECTION G-G

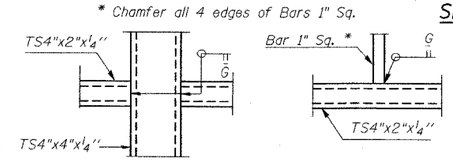

DETAIL C

DETAIL D

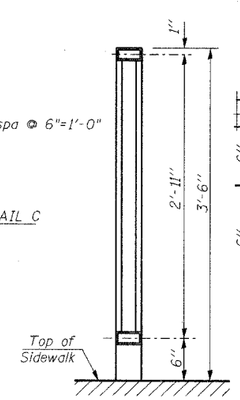

SECTION F-F

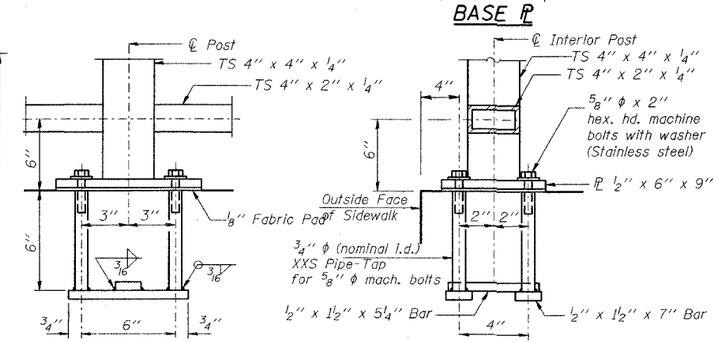

ANCHOR BOLT DETAILS

In lieu of the cast-in-place anchor device shown, the Contractor has the option of drilling and epoxy grouting ⅝" ϕ anchor rods. Embedment shall be according to the manufacturer's specifications.

NOTES:

Pedestrian Railing shall be according to Section 509 of the Standard Specifications, except as noted, and will be paid for at the Contract Unit Price per foot for Pedestrian Railing.

Hollow structural sections shall conform to the requirements of ASTM designation A 500, Grade B, structural steel tubing.

All other steel shapes and plates shall conform to the requirements of AASHTO M 270 Grade 36.

If the option of drilling and epoxy grouting the anchor rods is chosen, the Contractor shall use the capsule or the adhesive cartridge type anchor rods that have been previously tested and given a prior approval by the Department. The Contractor shall install these anchor rods in pre-drilled holes according to the manufacturer's recommendations and procedures. The capsule or the adhesive cartridge shall be sealed with pre-measured amounts of the adhesive chemical.

Space reinforcement to miss anchor rods.

All post, railing, splices, anchor devices and bent plates shall be painted using the Inorganic zinc-rich primer / Acrylic/Acrylic paint system. The color of the final finish coat shall be Black.

BILL OF MATERIAL

Item	Unit	Quantity
Pedestrian Railing	Foot	249

REVISIONS NAME	DATE

CITY OF NAPERVILLE

PEDESTRIAN RAIL DETAILS 1

MAIN STREET BRIDGE OVER
WEST BRANCH DUPAGE RIVER
STRUCTURE NO. 022-6755 - STA. 15+00.00

SCALE:
DATE JULY 9, 2004
DRAWN BY JHR
CHECKED BY SCD

DATE =Tue Jul 13 09:17:21 2004
DGN =L:\WORK\65154\CADD\DRAWINGS\Bridge\RailDdef.dgn