CONTRACT NO. 83664

EARTH TECH
A tyco INTERNATIONAL LTD. COMPANY

F.A.U. RTE.	SECTION	COUNTY	TOTAL SHEETS	SHEET NO.
	96-00099-00-BR	DUPAGE	62	38
STA. 13+25.00		TO STA. 16+55.00		
FED. ROAD DIST. NO.	ILLINOIS	FED. AID PROJECT		

SHEET S7 OF S22
Contr. 83664

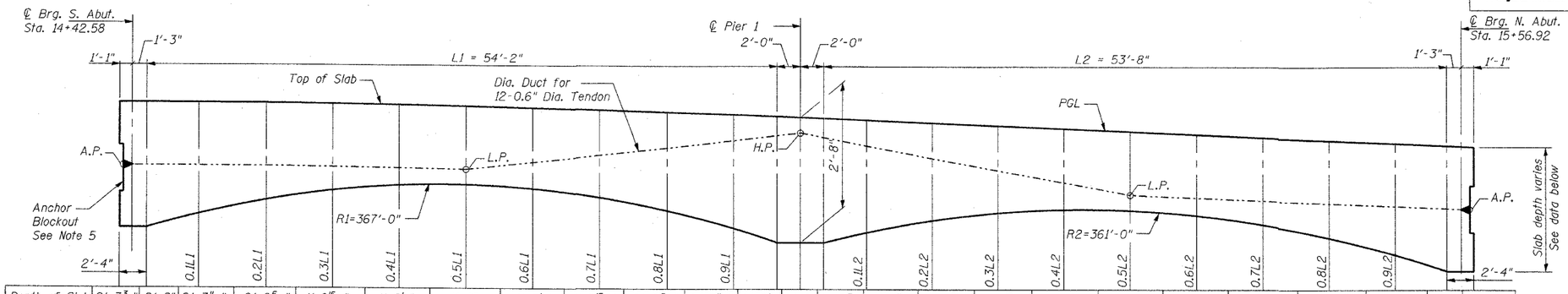

Depth of Slab	2'-7 3/4"	2'-8"	2'-3 11/16"	2'-0 5/16"	1'-9 15/16"	1'-8 1/2"	1'-8"	1'-8 1/2"	1'-9 15/16"	2'-0 5/16"	2'-3 11/16"	2'-8 1/4"	2'-8"	2'-7 3/4"	2'-3 11/16"	2'-0 5/16"	1'-9 15/16"	1'-8 1/2"	1'-8"	1'-8 1/2"	1'-9 15/16"	2'-0 5/16"	2'-3 11/16"	2'-8"	2'-7 11/16"
Tendon C.G.S.	1'-3"	1'-3"	1'-3"	1'-3"	1'-3"	1'-3"	1'-3"	1'-13/16"	11 3/8"	9 5/8"	7 13/16"	6 5/8"	6"	6 5/8"	7 13/16"	9 5/8"	11 3/8"	1'-13/16"	1'-3"	1'-3"	1'-3"	1'-3"	1'-3"	1'-3"	1'-3"

VERTICAL SCHEMATIC - LONGITUDINAL TENDON LAYOUT

Longitudinal dimensions given along ℄ Main Street
Not To Scale

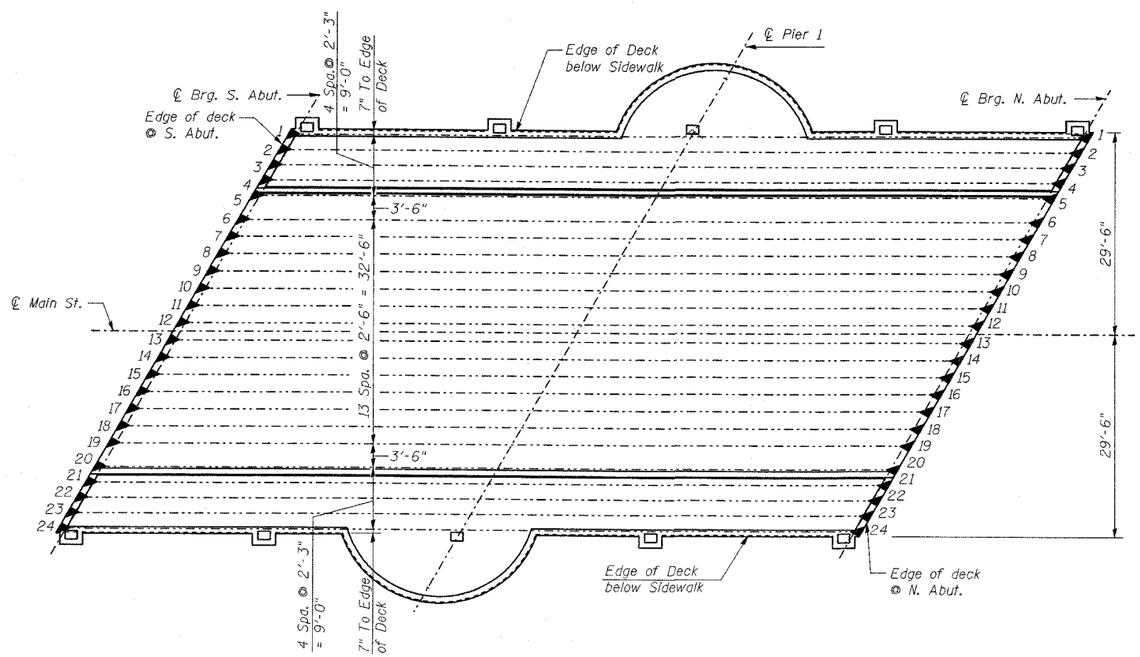

PLAN - POST-TENSIONING LAYOUT

NOTES:

1. C.G.S. indicates dimension from top of slab to center of prestressing steel.
2. All tendons are single-end stressed. All strands shall be 0.6" diameter.
3. Tendons shall be placed to achieve the profile for C.G.S. shown on the schematic elevation where
   A.P. = Anchor Point
   L.P. = Low Point
   H.P. = High Point
4. Longitudinal tendons shall be straight between A.P. & L.P. as well as L.P. & H.P.
5. Anchorage locations shown are based upon the use of proprietary multi-strand anchors. The Contractor is responsible for determining the proper anchor blockout size so that a minimum 2" clearance is achieved from the same concrete edge to the face of the non-metallic group cap.
6. Local bursting and confining steel shall be supplied by the contractor for his furnished P-T system at all anchorages. Cost of such shall be included in "Furnishing, installing and stressing Post Tensioning Tendons."
7. SUPERSTRUCTURE ERECTION SEQUENCE
   a). - Form and pour slab on temporary falsework.
   b). - Stress longitudinal tendons according to the stressing sequence table after the deck has cured to a minimum compressive strength of 4,000 psi and is at least 3 days old.
   c). - Grout post-tensioning ducts.
   d). - Remove temporary falsework and slab forms after the P-T duct grout has cured to a minimum compressive strength of 4,000 psi.
8. The contractor shall submit detailed plans and calculations for falsework and forms to the engineer for approval.
9. The post-tensioning jacking force in the stressing sequence can accommodate by stressing the tendons to a higher value while still satisfying allowable stress requirements.
10. AASHTO M203. Grade 270 Low relaxation strands (0.6" dia.) shall be used.
11. Tendon Design Properties
    a. Friction coefficient = 0.23
    b. Wobble coefficient = 0.0002/ft
    c. Max. Jacking Stress = 0.8 f's
    d. Max. Stress at Anchor after seating = 0.7 f's
    e. Assumed Anchor Set = 3/8"
12. R1 refers to the curved radius of the deck bottom over the length L1. The same is true for R2 and L2.
13. See "Post-tensioning" Special Provisions.

STRESSING SEQUENCE

	SEQUENCE	TENDON NO.	NO. STRANDS	JACKING FORCE (KIPS)
JACK @ S. ABUTMENT	1	9	12	528
	2	17	12	528
	3	3	12	528
	4	21	12	528
	5	5	12	528
	6	7	12	528
	7	11	12	528
	8	15	12	528
	9	19	12	528
	10	23	12	528
	11	13	12	528
	12	1	12	528
JACK @ N. ABUTMENT	13	8	12	528
	14	16	12	528
	15	4	12	528
	16	22	12	528
	17	6	12	528
	18	10	12	528
	19	14	12	528
	20	20	12	528
	21	24	12	528
	22	18	12	528
	23	12	12	528
	24	2	12	528

REVISIONS	
NAME	DATE

CITY OF NAPERVILLE
SLAB GEOMETRY AND
POST-TENSIONING SCHEDULE
MAIN STREET BRIDGE OVER
WEST BRANCH DUPAGE RIVER
STRUCTURE NO. 022-6755 - STA. 15+00.00

SCALE:
DATE JULY 9, 2004
DRAWN BY CVM
CHECKED BY SCD