CONTRACT NO. 83664

EARTH TECH
A tyco INTERNATIONAL LTD. COMPANY

F.A.U. RTE.	SECTION	COUNTY	TOTAL SHEETS	SHEET NO.
	96-00099-00-BR	DUPAGE	62	36
STA. 13+25.00		TO STA. 16+55.00		
FED. ROAD DIST. NO.	ILLINOIS	FED. AID PROJECT		

SHEET S5 OF S22
Contr. 83664

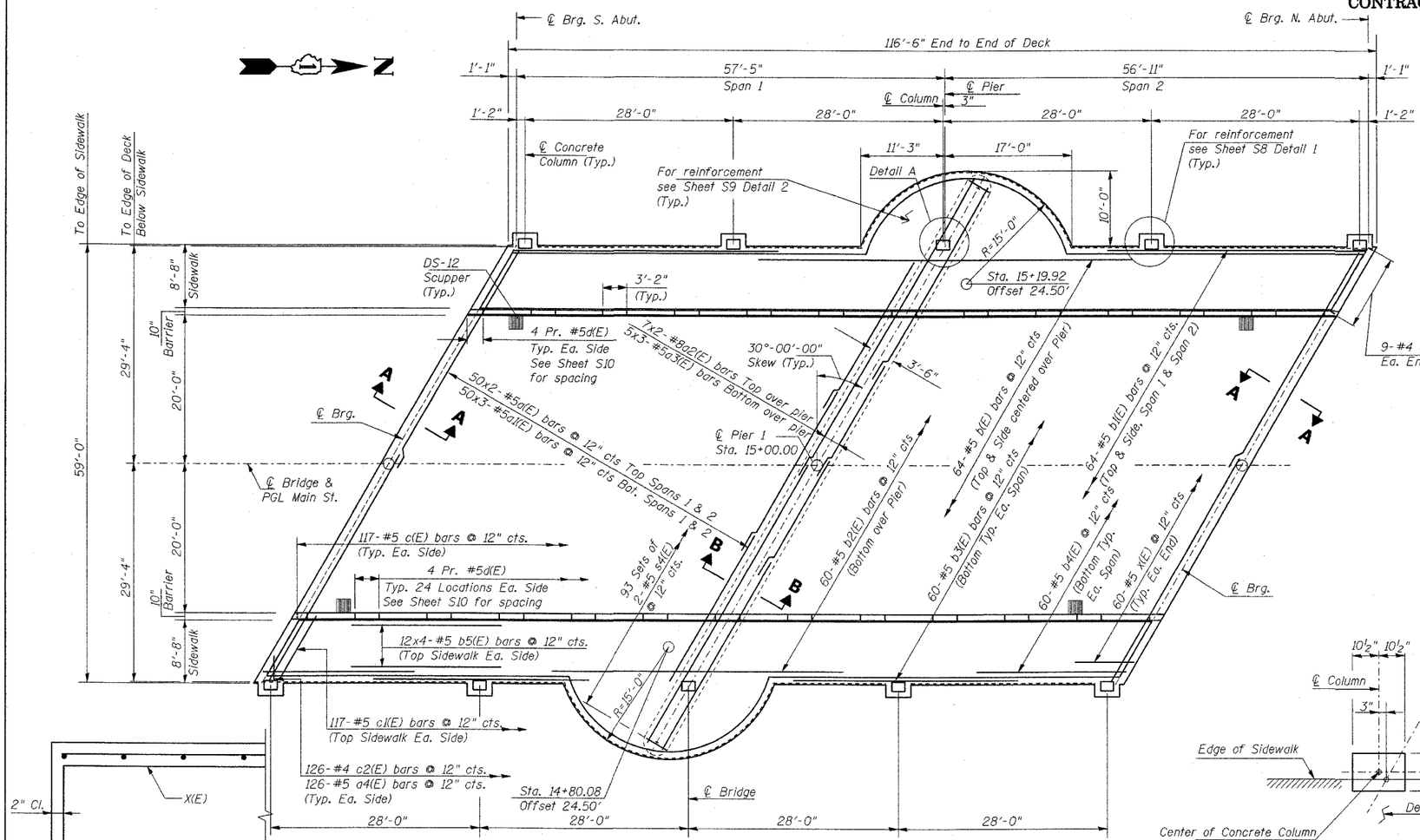

PLAN

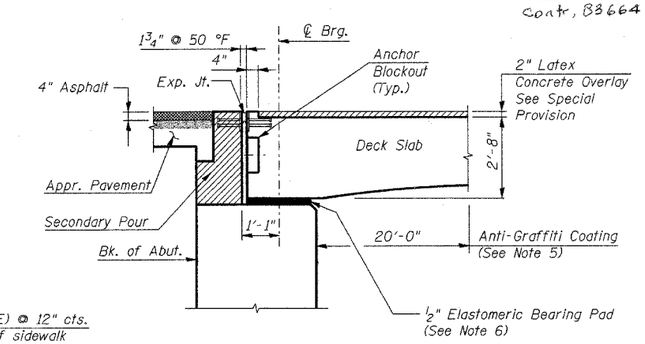

SECTION A-A
(TYP. EACH END)

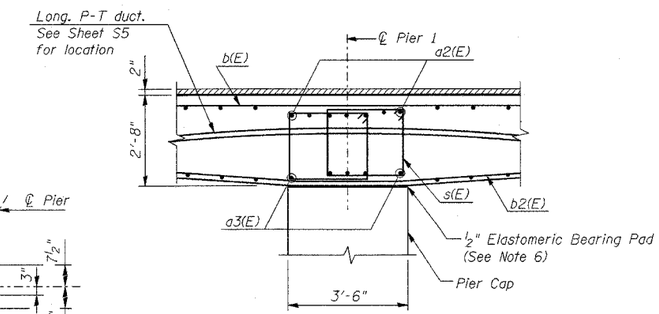

SECTION B-B

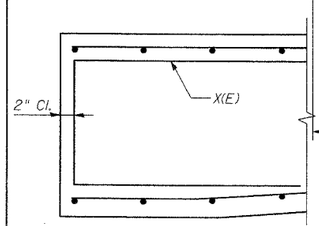

DETAIL B-2
(Between block-outs)

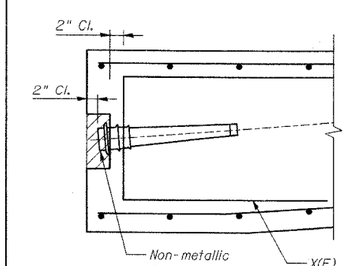

DETAIL B-1
(At block-out)

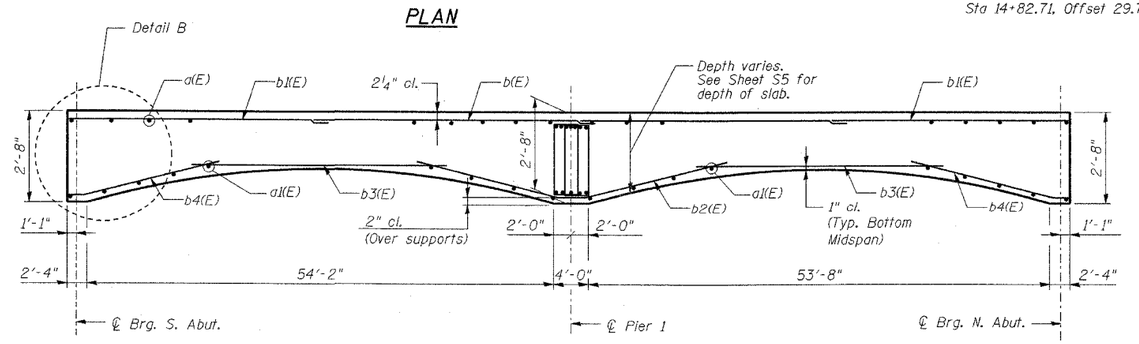

LONGITUDINAL SECTION
(Cut Along P.G.L.)

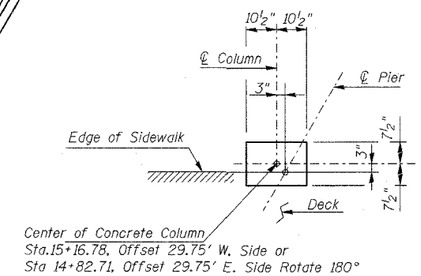

DETAIL A

TYP. MIN. LAP SPLICE
#5 = 3'-0"
#8 = 6'-4"

NOTES:

1. The locations of bars b(E) thru b3(E) and s(E) may be adjusted laterally to provide a 2" minimum clearance between the post-tension ducts and said bars.
2. Bars indicated thus 60x4-#5... etc. indicate 60 lines of bars with 4 lengths per line.
3. Work this sheet with Sheets S6 thru S9.
4. Order transverse "a1", a2", and "c2" bars at full length. Field cut bars to fit skew and use the remainder of bars at opposite end of deck.
5. Anti-Graffiti coating to be applied to bottom and sides of deck at south abutment only. See Special Provisions.
6. Provide Elastomeric Bearing Pad in accordance with Art. 1082 of Std. Specs. Pad shall be full length and width of bearing seat. See Sheets S15 thru S17.

REVISIONS	
NAME	DATE

CITY OF NAPERVILLE

DECK REINFORCEMENT PLAN

MAIN STREET BRIDGE OVER
WEST BRANCH DUPAGE RIVER
STRUCTURE NO. 022-6755 - STA. 15+00.00

SCALE:
DATE JULY 9, 2004
DRAWN BY CVM
CHECKED BY SCD

DATE =Tue Jul 13 09:15:11 2004
DGN =L:\WORK\65154\CADD\DRAWINGS\Bridge\dkrpln.dgn