EARTH TECH — A tyco INTERNATIONAL LTD. COMPANY	F.A.U. RTE.	SECTION	COUNTY	TOTAL SHEETS	SHEET NO.
		96-00099-00-BR	DUPAGE	62	27
	STA.		TO STA.		
	FED. ROAD DIST. NO.	ILLINOIS	FED. AID PROJECT		

CONTRACT 83664

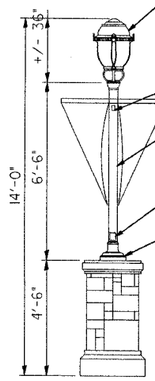

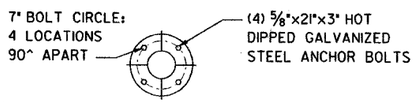

BASE

1 LIGHT POLE DETAIL

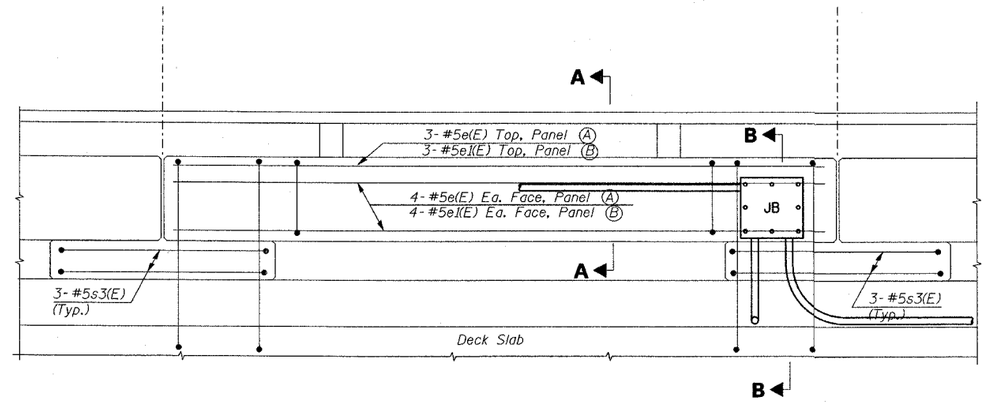

BARRIER TYP. PANEL

2 BARRIER TYP. PANEL

SCALE: 1"=1'-0"

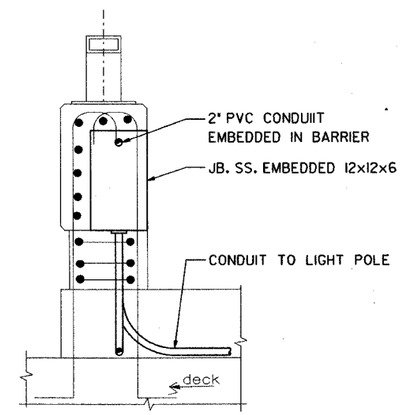

SECTION B-B

3 JUNCTION BOX

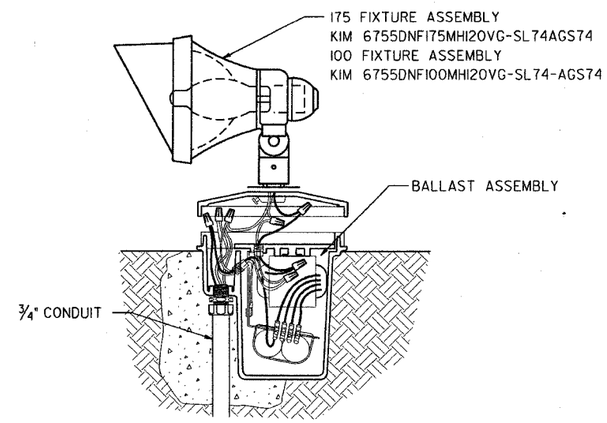

4 HID FIXTURE WITH IN-GRADE BALLAST BOX

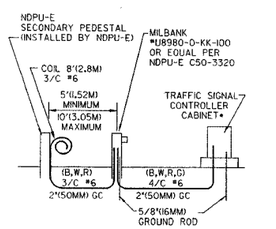

SERVICE CONNECTION TO TRAFFIC SIGNAL

* INSTALL THREADED BUSHING WITH LUG ON 2" GC SERVICE CONDUIT; CONNECT BUSHING WITH 1/C #6 GREEN CABLE TO GROUND ROD TO GREEN TERMINAL STRAP OF CONTROLLER.

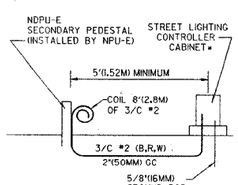

SERVICE CONNECTION TO STREET LIGHTING CONTROLLER

Title: TYPICAL STREET LIGHT CONNECTION	CITY OF NAPERVILLE STANDARD DETAIL		
Approved By:	DATE: 5/3/00	REV:	Details SL 4
	SCALE: NTS		

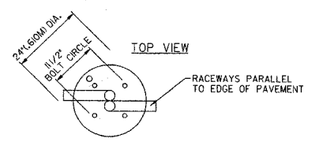

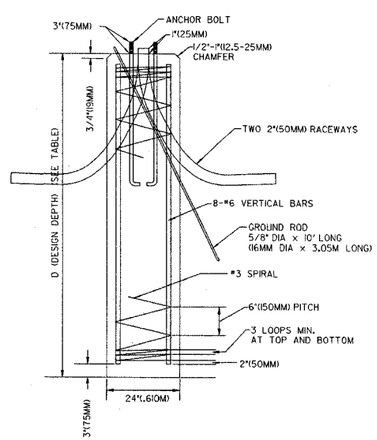

Title: TYPICAL STREET LIGHT CONNECTION	CITY OF NAPERVILLE STANDARD DETAIL		
Approved By:	DATE: 11/16/98	REV:	Details SL 5
	SCALE: NTS	SHEET: 1 OF 2	

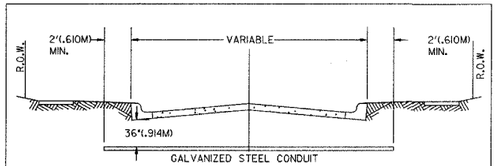

STREET CROSSING

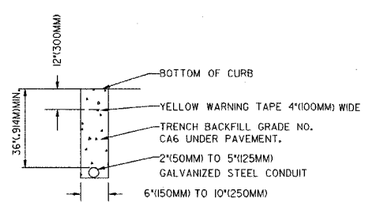

TRENCH SECTION

NOTES:
1) CONDUIT SHALL BE GALVANIZED STEEL CONDUIT
2) CONDUIT SHALL EXTEND A MINIMUM OF 2'(.610M) BEYOND BACK OF CURB
3) CONDUIT SHALL BE A MINIMUM OF 36"(.914M) BELOW CURB BOTTOM

Title: ELECTRIC CONDUIT UNDER PAVEMENT	CITY OF NAPERVILLE STANDARD DETAIL		
Approved By:	DATE: 4/19/99	REV:	Details SL 6
	SCALE: NTS		

REVISIONS	
NAME	DATE

CITY OF NAPERVILLE
ELECTRICAL
DETAILS AND SECTIONS
MAIN STREET BRIDGE OVER
WEST BRANCH DUPAGE RIVER
STRUCTURE NO. 022-6755 - STA. 15+00.00

SCALE: DRAWN BY CS
DATE JULY 9, 2004 CHECKED BY RWH

DATE =Sat Jul 10 13:45:10 2004 DGN =L:\Work\65154\cadd\drawings\Roadway\ELCdet02.dgn