76856

FAP ROUTE	SECTION	COUNTY	TOTAL SHEETS	SHEET NO
*	**	***	7	7
STA.	TO STA.			

EXISTING CONDITIONS:

* VARIOUS ROUTES
** DISTRICT 8 DEEP WELLS 2005-1
*** ST. CLAIR COUNTY

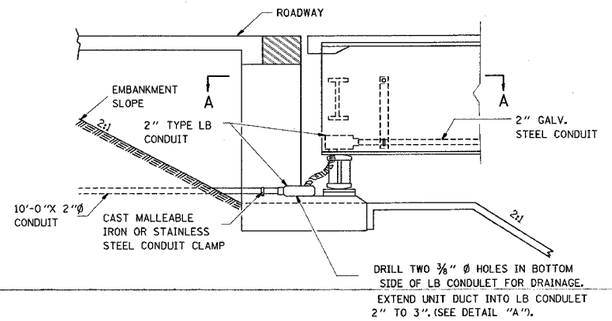

ELEVATION PLAN

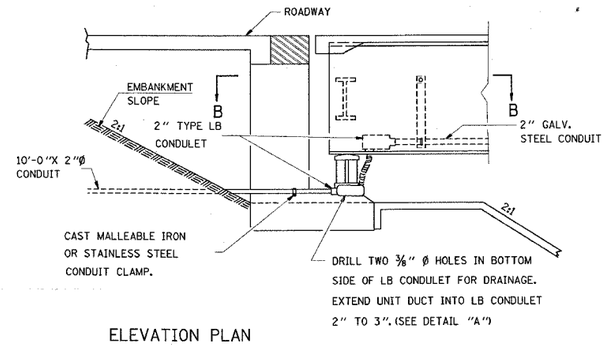

ELEVATION PLAN

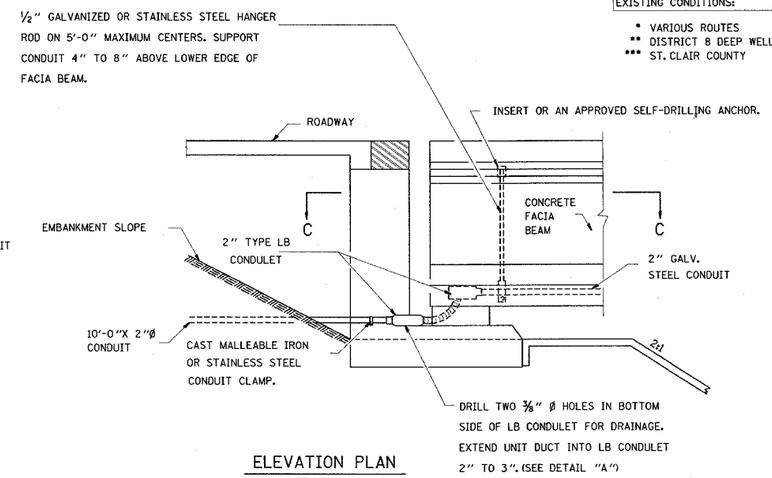

ELEVATION PLAN

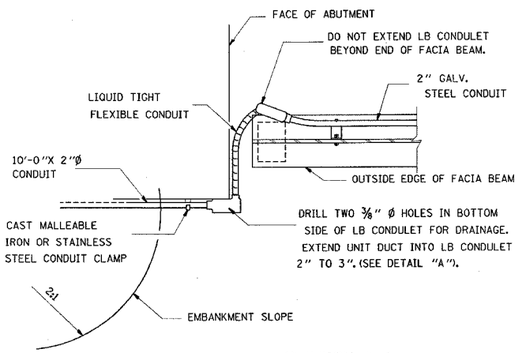

SECTION A-A

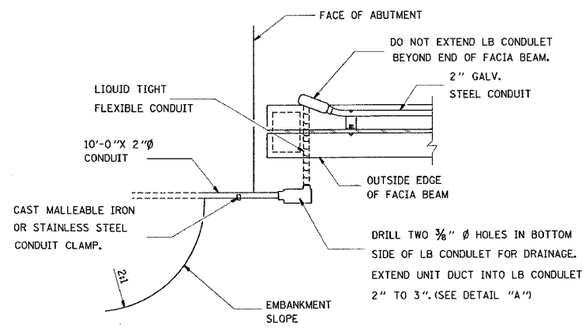

SECTION B-B

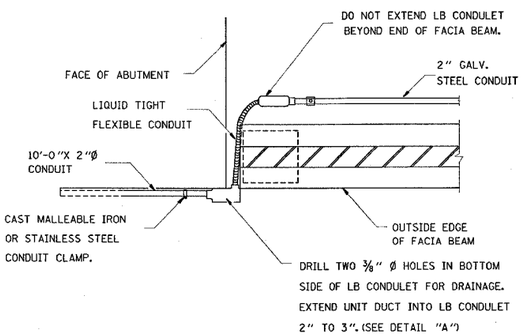

SECTION C-C

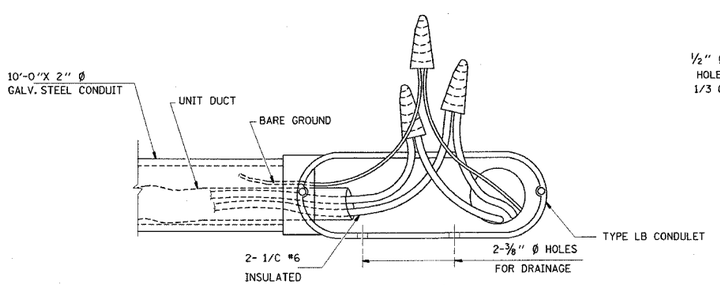

DETAIL "A"

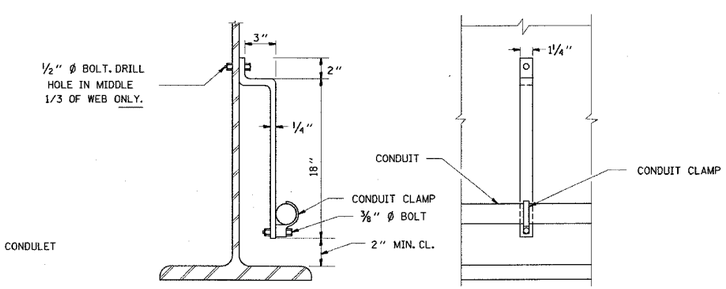

CONDUIT SUPPORT BRACKET

CONDUIT CLAMPS SHALL BE MALLEABLE IRON. LOCKNUTS, BOLTS, AND WASHERS SHALL BE STAINLESS STEEL. 1/4" STEEL BRACKET SHALL BE HOT-DIPPED GALVANIZED AFTER FABRICATION. LOCATE ON 8'-0" CENTERS.

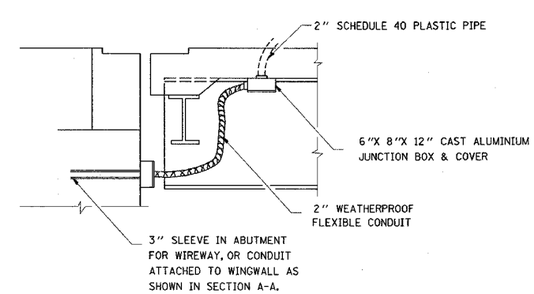

SECTION AT ABUTMENTS

REVISIONS	
NAME	DATE

ILLINOIS DEPARTMENT OF TRANSPORTATION

CONDUIT DETAILS

VARIOUS ROUTES
DISTRICT 8 DEEP WELLS 2005-1
ST. CLAIR COUNTY

DRAWN BY:

PLOT DATE: Friday July 30, 2004 @ 3:41:30 PM

PLAN	BY	DATE
SURVEYED		
PLOTTED		
HORIZ.		
VERT.		
R.O.W.		
CADD FILE NAME		
NOTE BOOK		
NO.		

7/30/2004
Friday July 30, 2004 @ 3:41:30 PM
c:\pwworking\dot\d0806085\plan1ch-76856sa.dgn LV41-63

(This Text Construction Lines)