76856

FAP ROUTE	SECTION	COUNTY	TOTAL SHEETS	SHEET NO
*	**	***	7	5
STA.		TO STA.		

EXISTING CONDITIONS:

* VARIOUS ROUTES
** DISTRICT 8 DEEP WELLS 2005-1
*** ST. CLAIR COUNTY

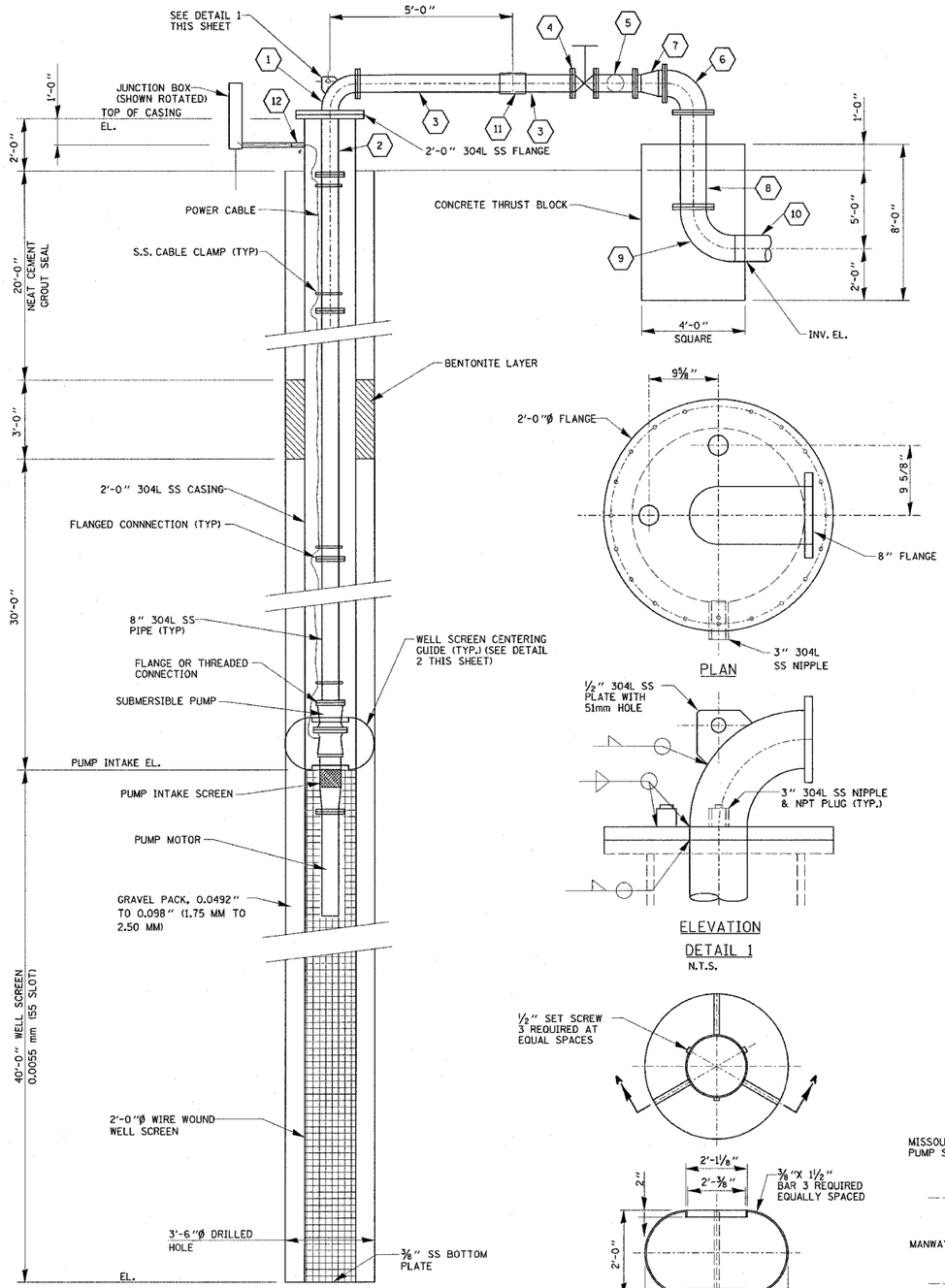

SECTION THRU WELL NO.4
N.T.S.

LEGEND

1. 8" 304 L SS 90° ELBOW W/2'-0" FLANGE AND 8" FLANGE
2. 8" 304 L SS PIPE FLANGE x PE. WELD PE TO 2'-0" FLANGE FOR ITEM 1
3. 8" 304 L SS PIPE, FLANGE x PE
4. 8" KNIFE GATE VALVE.
5. 8" 304 L SS TEE, FLANGE
6. 1'-0" 304 L SS 90° ELBOW FLANGED.
7. 8"X1-0" 304 L SS REDUCER, FLANGED
8. 1'-0" 304 L SS PIPE, FLANGED
9. 1'-0" SDR 17 HDPE 90° ELBOW, FLANGE x PE
10. 1'-0" SDR 17 HDPE PIPE
11. SS COUPLING, 8"X1'-0 1/2"
12. 3" 304 L SS NIPPLE. WELD TO CASING (SHOWN ROTATED) ORIENT PER ELECTRICAL DRAWINGS.

NOTE:
ALL NUTS, BOLTS & WASHERS SHALL BE 304 STAINLESS STEEL.

PLAN

ELEVATION

DETAIL 1
N.T.S.

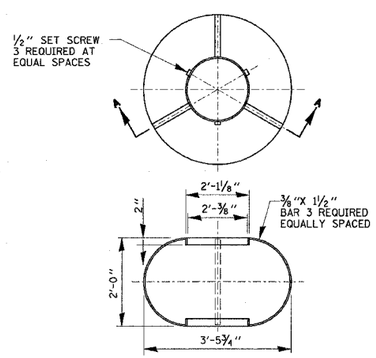

SECTION A-A

DETAIL 2
N.T.S.

WELL SCREEN CENTERING GUIDE

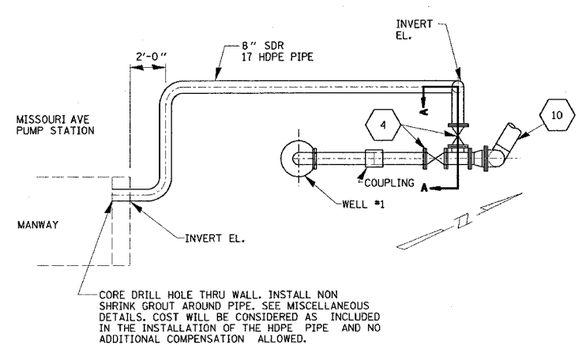

PLAN

DETAIL 3
N.T.S.
FOR SECTION A-A

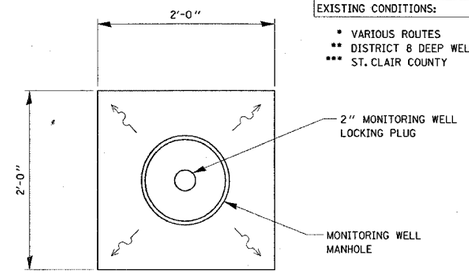

PLAN

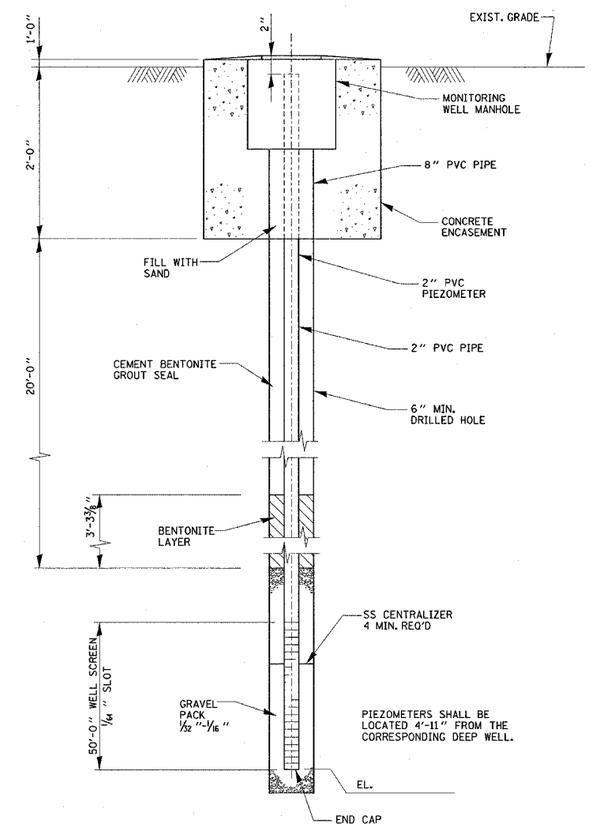

PROFILE

DETAIL OF NEW PIEZOMETER
N.T.S.

NOT TO SCALE

REVISIONS	
NAME	DATE

ILLINOIS DEPARTMENT OF TRANSPORTATION

VARIOUS ROUTES TYPICAL WELL DETAILS

VARIOUS ROUTES
DISTRICT 8 DEEP WELLS 2005-1
ST. CLAIR COUNTY

DRAWN BY:

PLOT DATE: Friday July 30, 2004 @ 1:45:20 PM

PLAN		
SURVEYED		DATE
PLOTTED		
ALIGNMENT CHECKED		
R.O.W. MAY CHECKED		
CADD FILE NAME		
NOTE BOOK		
NO.		