F.A.P. RTE.	SECTION	COUNTY	TOTAL SHEETS	SHEET NO.
330	(1R)TS	KANKAKEE	22	6
STA.		TO STA.		
FED. ROAD DIST. NO. 7	ILLINOIS	FED. AID PROJECT		

CONTRACT NO. 66416

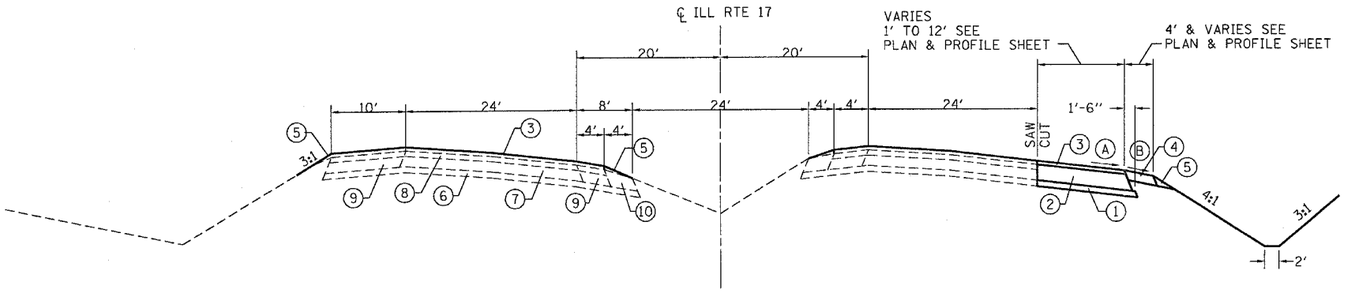

TYPICAL SECTION ILL RTE 17 STA. 51+96.34 TO STA. 57+96.92 *

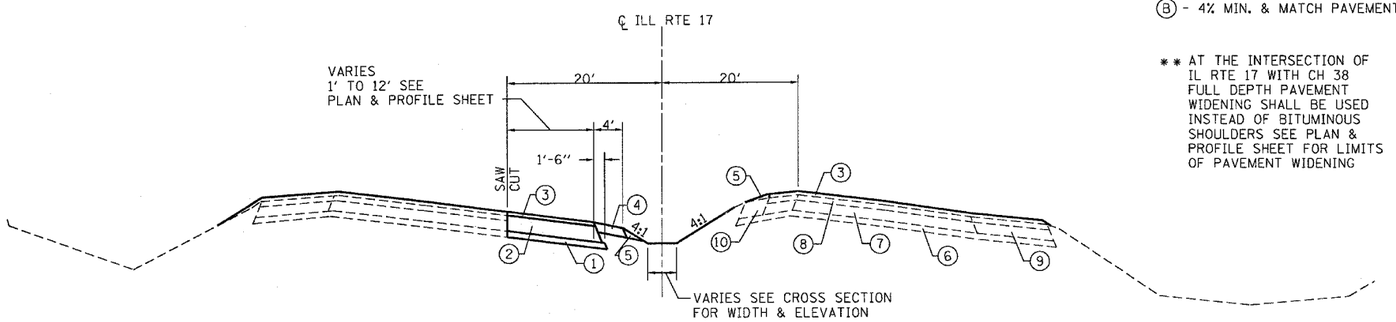

TYPICAL SECTION ILL RTE 17 STA. 59+00 TO STA. 65+50 *

* TYPICAL SECTIONS THRU INTERSECTION SIMILAR

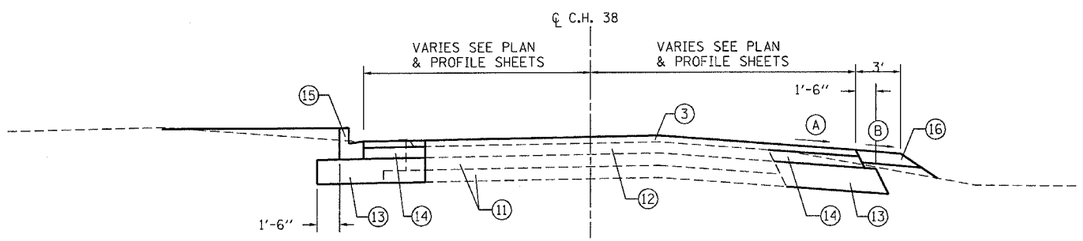

C.H. 38 TYPICAL SECTION

(A) - MATCH EXISTING
(B) - 4% MIN. & MATCH PAVEMENT

** AT THE INTERSECTION OF IL RTE 17 WITH CH 38 FULL DEPTH PAVEMENT WIDENING SHALL BE USED INSTEAD OF BITUMINOUS SHOULDERS SEE PLAN & PROFILE SHEET FOR LIMITS OF PAVEMENT WIDENING

NOTE: PAVEMENT WIDENING MATERIALS FOR CH 38 SHALL BE AS SHOWN FROM STA. 1+21 TO STA. 2+37.26 FROM IL RTE 17 TO STA. 1+21 THEY SHALL BE SAME AS FOR IL RTE 17

(1) STABILIZED SUB-BASE 4"
(2) BITUMINOUS BASE COURSE SUPERPAVE 10 1/2"
(3) BITUMINOUS CONCRETE SURFACE COURSE, SUPERPAVE, MIX "D", N70 1½" OVER 1" OF LEVELING BINDER (MACHINE METHOD), SUPERPAVE N70
** (4) BITUMINOUS SHOULDERS SUPERPAVE 6"
(5) AGGREGATE SHOULDERS, TYPE B
(6) EXISTING STABILIZED SUB-BASE 4"
(7) EXISTING PCC PAVEMENT 7"
(8) EXISTING BITUMINOUS OVERLAY 3 1/2"
(9) EXISTING STABLIZED BAM SHOULDER
(10) EXISTING AGGREGATE SHOULDER
(11) EXISTING AGGREGATE SUB-BASE AND BASE COURSE MATERIAL
(12) EXISTING BITUMINOUS OVERLAY 5 1/2"*
(13) SUB-BASE GRANULAR MATERIAL, TYPE A 12"
(14) BITUMINOUS BASE COURSE SUPERPAVE 5 1/2"
(15) COMBINATION CONCRETE CURB & GUTTER TYPE B-6.12
(16) AGGREGATE SHOULDERS TYPE A 6"

	SUPERPAVE BINDER	SUPERPAVE SURFACE	SUPERPAVE LEVEL BINDER	SUPERPAVE BASE COURSE
PG GRADE	PG64-22	PG64-22	PG64-22	PG64-22
MAX % RAP ALLOWABLE**	15%	10%	15%	25%
DESIGN AIR VOIDS	4.0% @ N70	4.0% @ N70	4.0% @ N70	2.0% @ N50
MIXTURE COMPOSITION	IL 19.0	IL 12.5 OR IL 9.5	IL 9.5	BAM
FRICTION AGGREGATE		MIXTURE D		
PLANT CONTROL LIMITS	CLASS I	CLASS I	CLASS I	NON-CLASS I
DENSITY CONTROL METHOD	CORES	CORES		% GROWTH CURVE

** IF RAP OPTION IS SELECTED, THE ASPHALT CEMENT GRADE MAY NEED TO BE ADJUSTED. THIS WILL BE DETERMINED BY THE ENGINEER.

IL ROUTE 17
AND CH 38 / LOWE ROAD
TYPICAL SECTIONS & NOTES
FAP ROUTE 330, FAU ROUTE 6209
SEC. NO. (1R)TS
KANKAKEE COUNTY