STATE OF ILLINOIS

[redacted]

ROUTE NO.	SECTION	COUNTY	TOTAL SHEETS	SHEET NO.
89	*	MARSHALL PUTNAM	59	41

SHEET NO. 3
7 SHEETS

*(122,123,124) W/RS,122,BR-105,BR-1 662284

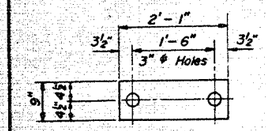

FABRIC BEARING PAD

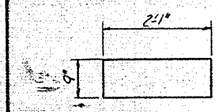

GRAPHITED ASBESTOS BEARING PAD

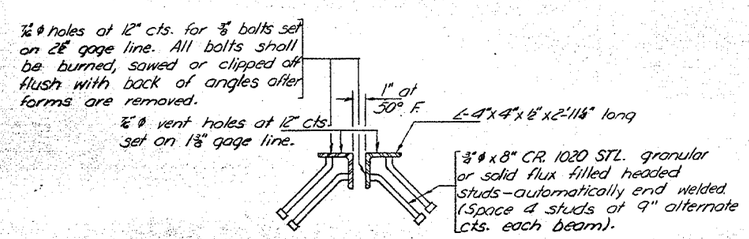

DETAIL "A"

(Cost of angles and studs shall be incidental to P.P.C. Deck Beams)

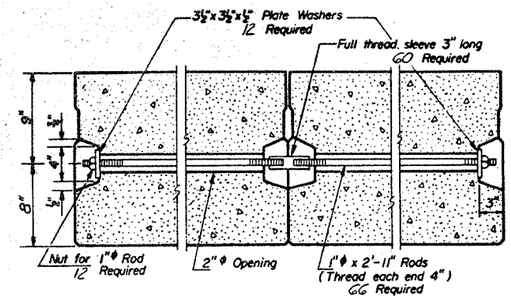

TYPICAL TRANSVERSE TIE ASSEMBLY

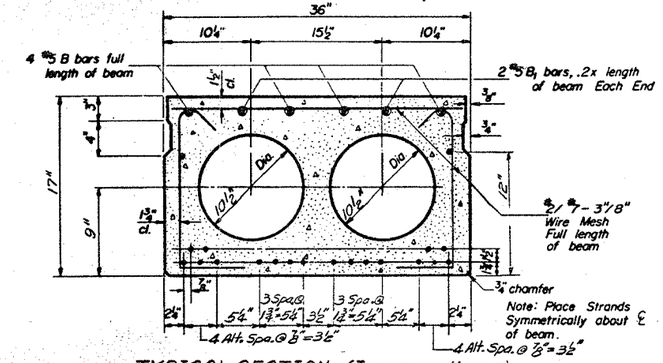

TYPICAL SECTION (INTERIOR UNITS)

20-7/16" ϕ Strands Each Strand Stressed to 21,700 lbs.
14 - Strands 1⅜" up 4 - Strands 3½" up 2 - Strands 12" up

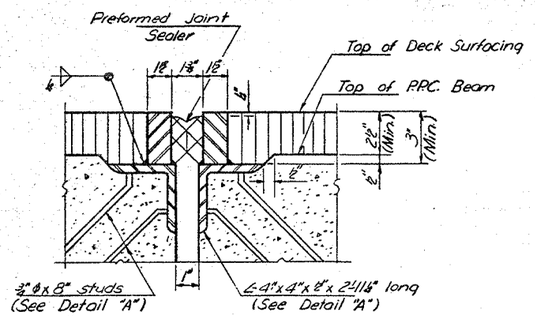

DETAIL OF EXPANSION DEVICE

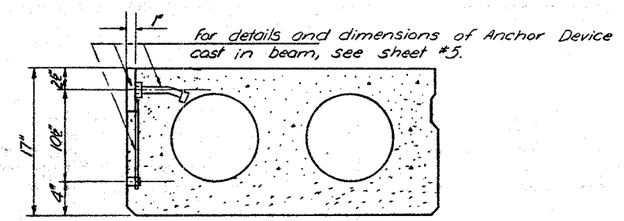

TYPICAL SECTION (EXTERIOR UNITS)

Dimensions, reinforcement bars, and strands are the same as interior units except as shown.

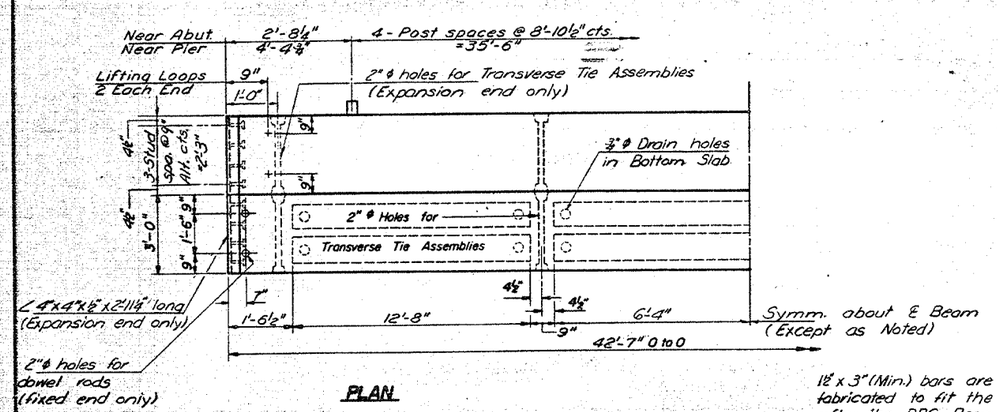

PLAN

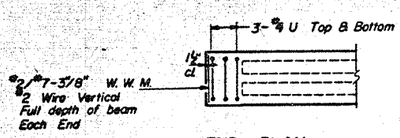

END PLAN

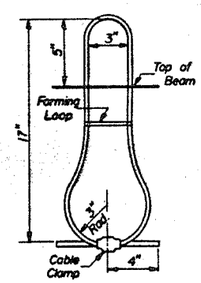

LIFTING LOOP DETAIL

12" x 3" (Min.) bars are to be ordered and fabricated to fit the pavement crown after the P.P.C. Beams are in place and the Engineer has taken profile elevation along the entire structure. They are to be field welded to ∠-4"x4"x½" angles with 6" and to be cut near W.T. to fit the pavement slope. Cost of bars shall be incidental.

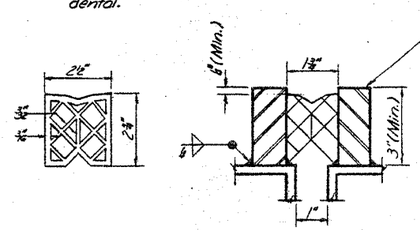

PREFORMED JOINT SEALER

GENERAL NOTES

Prestressing steel shall be non-galvanized high strength, stress-relieved 7-wire strand. The nominal diameter shall be 7/16" and the nominal cross-sectional area shall be 0.109 sq. in.. Lifting loops shall be ⅝" diameter, 6x19 class wire rope with fiber core and shall have a minimum ultimate tensile strength of 2900 lbs.

The 1"ϕ rods in the transverse tie assembly shall be tightened to a snug fit and the threads set. Pockets that receive transverse tie bar on outside beam shall be filled with grout after transverse tie assembly is in place.

Longitudinal shear keys shall be packed with a very dry mix of 2:1 sand and P.C. mortar. After beams have been erected, holes for the dowel anchors shall be drilled into the sub-structure. Grout dowels at fixed end.

After fabrication the transverse tie assemblies (tie rods, nuts, washers and sleeves) shall be hot-dipped galvanized in accordance with A.S.T.M. Designation: A153.

Cost of reinforcement and accessories cast into the beam, of bearing pads, of armor angles, and of grouting longitudinal shear keys is included in unit price bid for "Precast Prestressed Concrete.

Steel for dowel rods; and transverse tie rods shall be S.A.E. 1020 or ASTM A-306, Grade 70-80.

BILL OF MATERIAL

Precast Prestressed Concrete Deck Beams (36"x17")	Sq. Ft.	2811

DESIGNED Stanley S. Lin	EXAMINED	JAN. 27 1971
CHECKED C. L. Tu. Chen	PASSED	
DRAWN-JAMES R. CARMAN G.M.R.	APPROVED	
CHECKED S.L. C.T.C.		

PD-1-S 11-19-65 Rev. 5-20-68

17"x36" DECK BEAM DETAILS
F.A. RT. 146 - SEC. 105BR-1
PUTNAM COUNTY
STA. 425+08