STATE OF ILLINOIS
DEPARTMENT OF TRANSPORTATION

SHEET 11 OF 14

ROUTE NO.	SECTION	COUNTY	TOTAL SHEETS	SHEET NO.
FAP 653	105 BR-2	PUTNAM		31
FED. ROAD DIST. NO.		ILLINOIS	FED. AID PROJ.	

CONTRACT NO. 66284

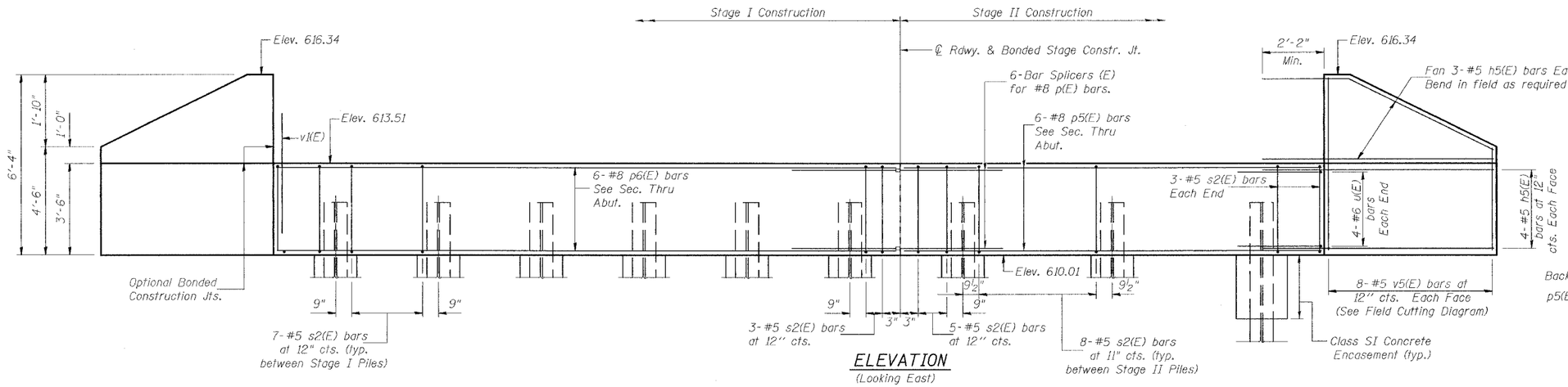

ELEVATION
(Looking East)

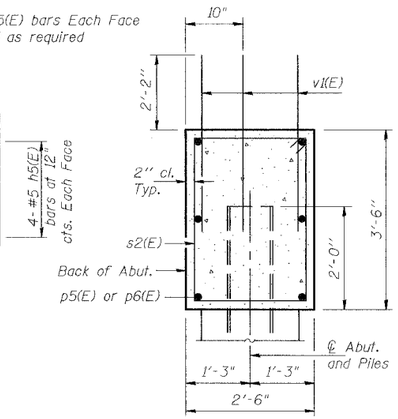

SEC. THRU ABUT.

PILE DATA

Type: Steel HP12x53
Capacity: 56 tons
Drive to 84 tons bearing
Est. Length: 54'
No. Required: 8+1 Test Pile

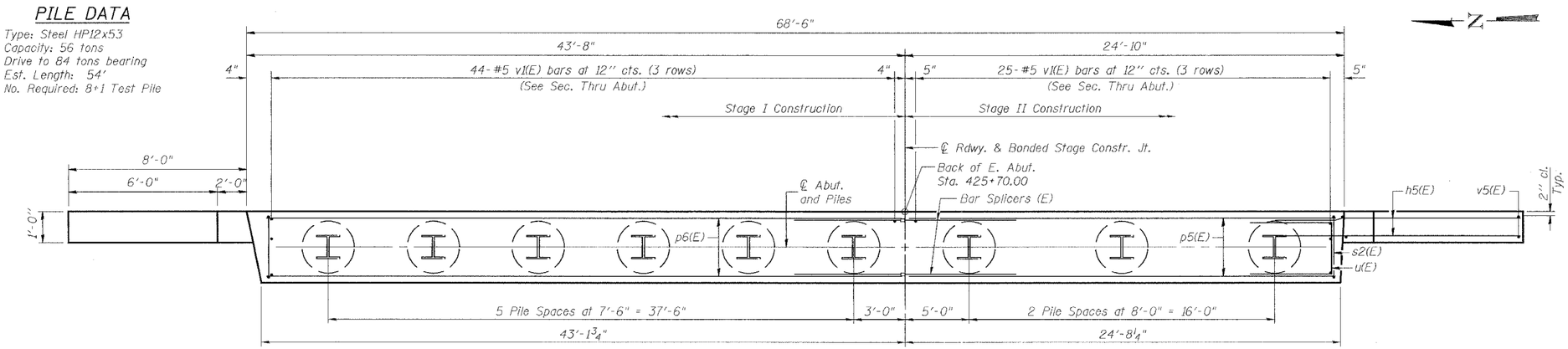

PLAN

BILL OF MATERIAL

Bar	No.	Size	Length	Shape
h5(E)	28	#5	10'-0"	
p5(E)	6	#8	24'-4"	
p6(E)	6	#8	42'-9"	
s2(E)	65	#5	11'-8"	
u(E)	8	#6	7'-2"	
v1(E)	207	#5	4'-2"	
v5(E)	16	#5	10'-2"	
Concrete Structures			Cu. Yd.	25.5
Reinforcement Bars, Epoxy Coated			Pound	3320
Structure Excavation			Cu. Yd.	145
Furnishing Steel Piles HP12x53			Foot	432
Driving Steel Piles			Foot	432
Test Pile Steel HP12x53			Each	1

Reinforcement Bars designated (E) shall be epoxy coated.

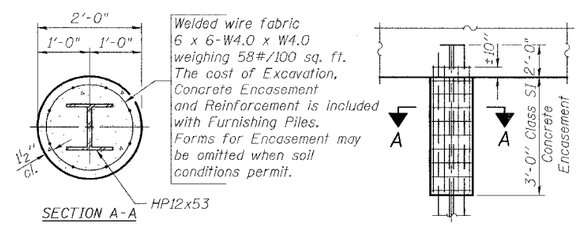

PILE ENCASEMENT DETAIL

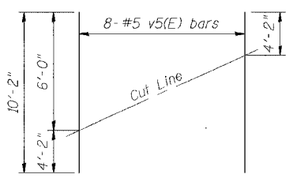

FIELD CUTTING DIAGRAM

Order v5(E) full length. Cut as shown and use remainder of bars in opposite face.

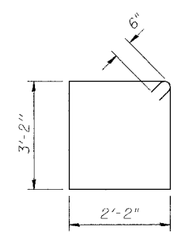

BAR s2(E)

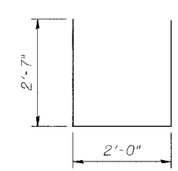

BAR u(E)

DESIGNED	CDB
CHECKED	DCD
DRAWN	SJS
CHECKED	CDB/DCD

EAST ABUTMENT
ILLINOIS 18 OVER
LITTLE SANDY CREEK
FAP ROUTE 653 SECTION 105 BR-2
PUTNAM COUNTY
STATION 425+08.00
STRUCTURE NO. 078-0039

FILE: m:\projects\IL-IR\labut12.dgn USER: SJS DATE: 07\01\2004 - 12:00:19