CONTRACT NO. 64656

F.A.P. RTE.	SECTION	COUNTY	TOTAL SHEETS	SHEET NO.
22	16R	WHITESIDE	201	106
STA.		TO STA.		
FED. ROAD DIST. NO.	ILLINOIS	FED. AID PROJECT		

BITUMINOUS APPROACHES & MAILBOX RETURNS

7.2m (24') FIELD ENTRANCE

	APRON	PER M (LIN FT) OF ENTR
AGG BASE CSE T-B M TON (TON)	38.5 (44.5)	3.5 (1.2)

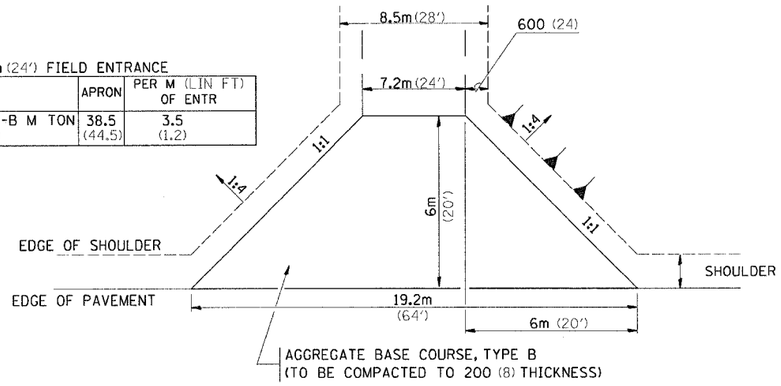

FIELD ENTRANCE

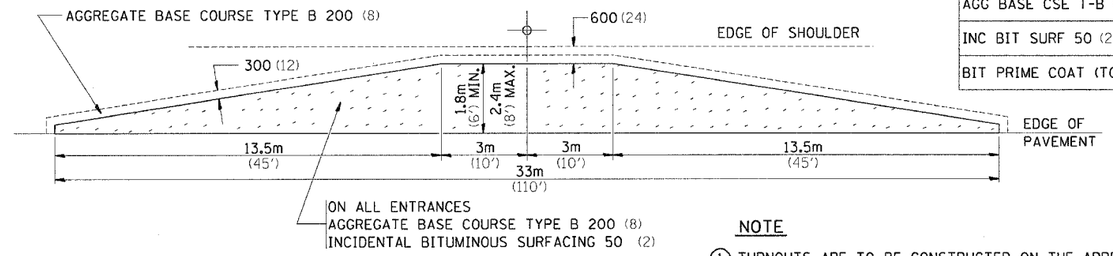

MAILBOX TURNOUT

	1.8m (6')	2.4m (8')
AGG BASE CSE T-B (TON)	22.2 (24.5)	28.2 (31.1)
INC BIT SURF 50 (2) (TON)	5.3 (5.8)	7.1 (7.8)
BIT PRIME COAT (TON)	0.05 (0.06)	0.07 (0.08)

NOTE

1. TURNOUTS ARE TO BE CONSTRUCTED ON THE APPROACH SIDE OF ALL PE & CE REGARDLESS IF A MAILBOX IS PRESENT.
2. ALL PE & CE ARE TO BE SURFACED TO RIGHT OF WAY LINE. AREA BEHIND RIGHT OF WAY SHALL MATCH EXISTING SURFACE.
3. FE ARE TO BE AGGREGATE TO RIGHT OF WAY OR TOUCH DOWN, WHICH EVER IS GREATEST.
4. QUANTITIES ARE CALCULATED WITH 1' BITUMINOUS SHOULDER IN PLACE. AGGREGATE QUANTITIES SHOWN ARE FOR NEW CONSTRUCTION.
5. EXCAVATION REQUIRED FOR PLACEMENT OF AGGREGATE BASE COURSE SHALL BE CONSIDERED INCIDENTAL TO THE AGGREGATE BASE COURSE.
6. ALL DIMENSIONS ARE IN MILLIMETERS (INCHES) UNLESS OTHERWISE NOTED.

10.5m (35') COMMERICAL ENTRANCE

	1.8m (6')	2.4m (8')	PER METER ENTR (FOOT)
AGG BASE CSE T-B (TON)	59.8 (65.9)	62.1 (68.5)	5.57 (1.87)
INC BIT SURF 50 (2) (TON)	16.9 (18.6)	17.7 (19.5)	1.61 (0.54)
BIT PRIME COAT (TON)	0.17 (0.19)	0.18 (0.20)	0.018 (0.006)

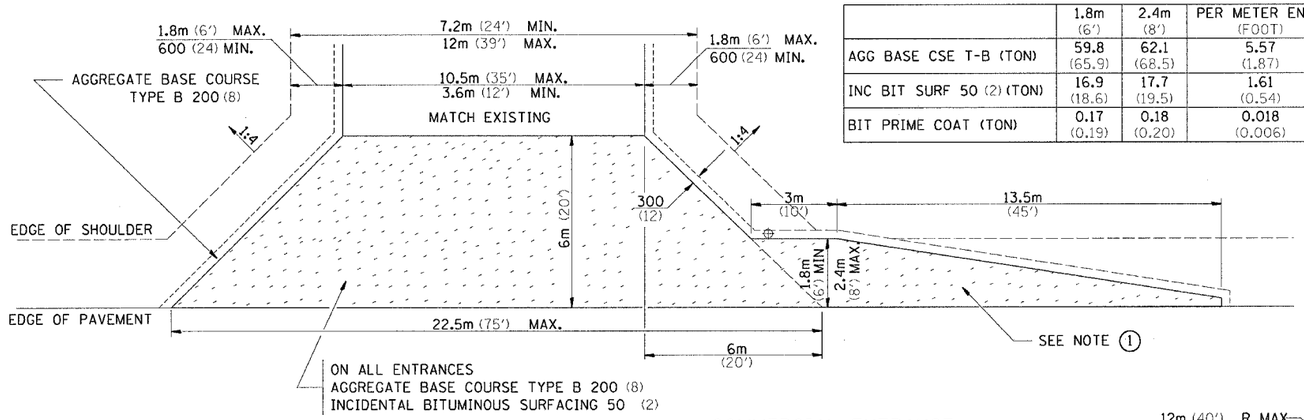

COMMERCIAL ENTRANCE

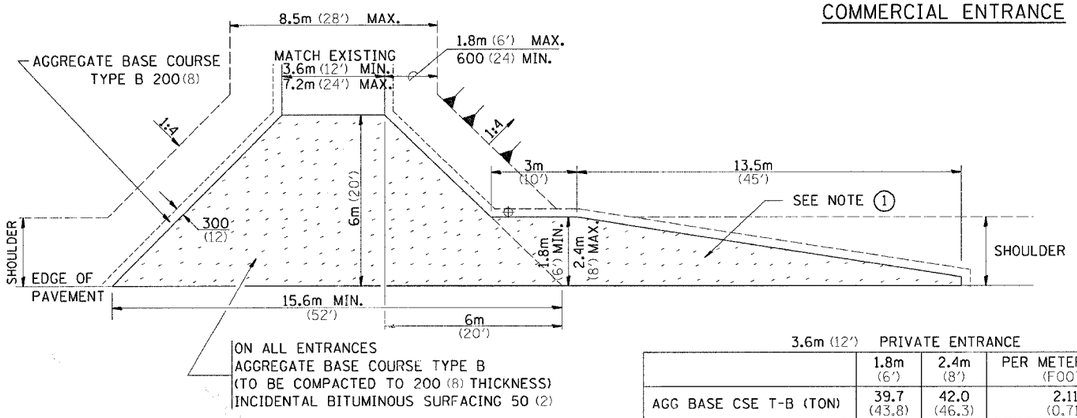

PRIVATE ENTRANCE

3.6m (12') PRIVATE ENTRANCE

	1.8m (6')	2.4m (8')	PER METER ENTR (FOOT)
AGG BASE CSE T-B (TON)	39.7 (43.8)	42.0 (46.3)	2.11 (0.71)
INC BIT SURF 50 (2) (TON)	10.7 (11.8)	11.5 (12.7)	0.57 (0.19)
BIT PRIME COAT (TON)	0.11 (0.12)	0.18 (0.13)	0.006 (0.002)

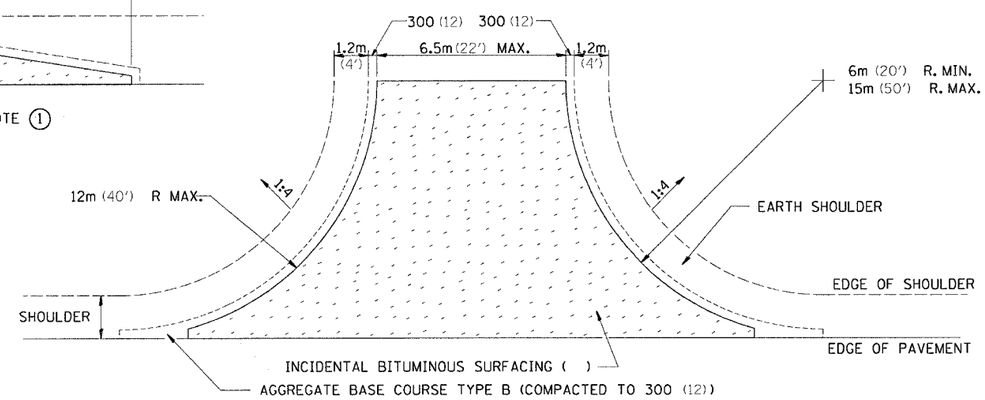

SIDE ROAD RETURN

	6m RADIUS (20')			9m RADIUS (30')			12m RADIUS (40')		
	5.5m (18')	6m (20')	6.5m (22')	5.5m (18')	6m (20')	6.5m (22')	5.5m (18')	6m (20')	6.5m (22')
AGG BASE CSE T-B (TON)	40.9 (45.1)	43.7 (48.2)	46.4 (51.2)	70.3 (77.5)	74.4 (82.0)	78.6 (86.6)	105.5 (116.3)	111.0 (122.4)	116.6 (128.5)
INC BIT SURF AT 25 (1) (TON)	3 (3.3)	3.3 (3.6)	3.4 (3.8)	5.3 (5.8)	5.5 (6.1)	5.9 (6.5)	8.0 (8.8)	8.4 (9.3)	9.0 (9.9)
BIT PRIME COAT (TON)	0.07 (0.08)	0.08 (0.09)	0.10 (0.10)	0.14 (0.15)	0.15 (0.16)	0.15 (0.17)	0.20 (0.22)	0.22 (0.24)	0.23 (0.25)

NOTE: USE 50 (2) INC. BIT. SURF. ON EXISTING RETURNS

20.1

DISTRICT 2 STANDARDS

FILE NAME = n:\hpr-ques\b286997\d86997ap1.dgn
LEVELS = 1-59
PLOT SCALE = 40(DPLOTSCALE)
PLOT DATE = Mon Apr 12 10:22:29 2004
OPERATOR = DUNCAN - PROGRAM DEVELOPEMENT/PLANS