F.A.P. RTE.	SECTION	COUNTY	TOTAL SHEETS	SHEET NO.
22	16R	WHITESIDE	201	14
STA.		TO STA.		
FED. ROAD DIST. NO.	ILLINOIS	FED. AID PROJECT		

CONTRACT NO. 64656

TYPICAL SECTIONS

WEST MOLINE RD

STA 1567+00.00 TO STA 1576+00.00

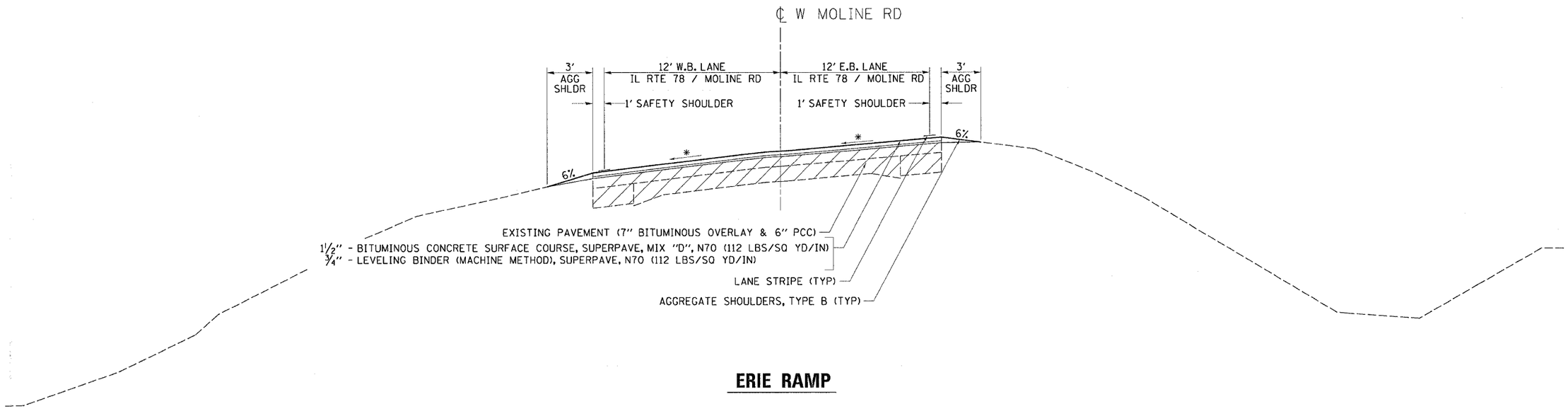

ERIE RAMP

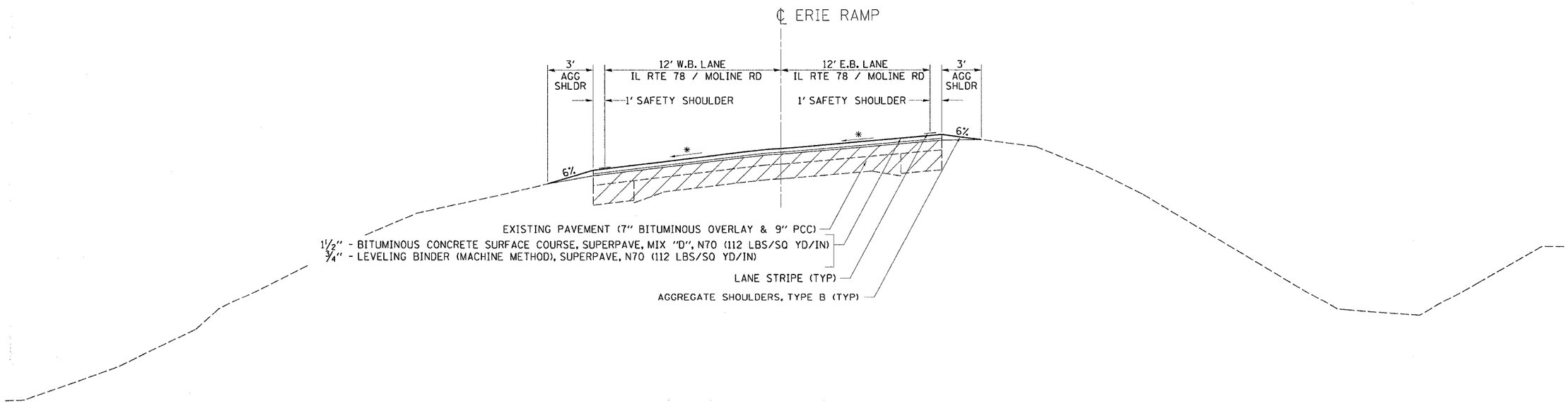

* MATCH EXISTING CROSS-SLOPE OR MINIMUM OF 1.0%

FILE NAME = c:\projects\p206997\d06997typ.dgn
LEVELS = 1-63
PLOT SCALE = #(D2PLOTSCALE)
PLOT DATE = Thu May 13 08:02:18 2004
OPERATOR = DUNCAN - PROGRAM DEVELOPEMENT/PLANS