F.A.I. RTE.	SECTION	COUNTY	TOTAL SHEETS	SHEET NO.
80	81-1WS-3	ROCK ISLAND	16	15
STA. _____		TO STA._____		
FED. ROAD DIST. NO. _	ILLINOIS	FED. AID PROJECT		

CONTRACT 64600

CONDUIT DETAILS

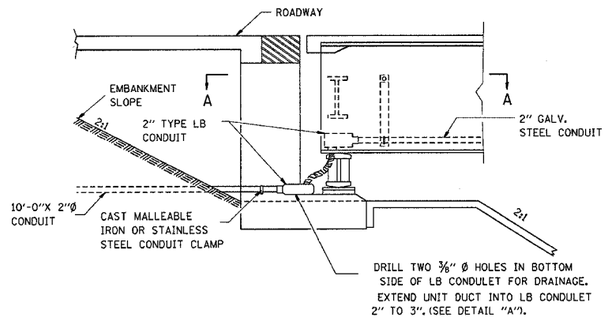

ELEVATION PLAN

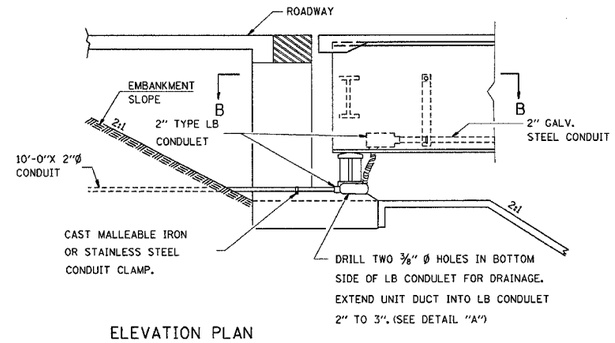

ELEVATION PLAN

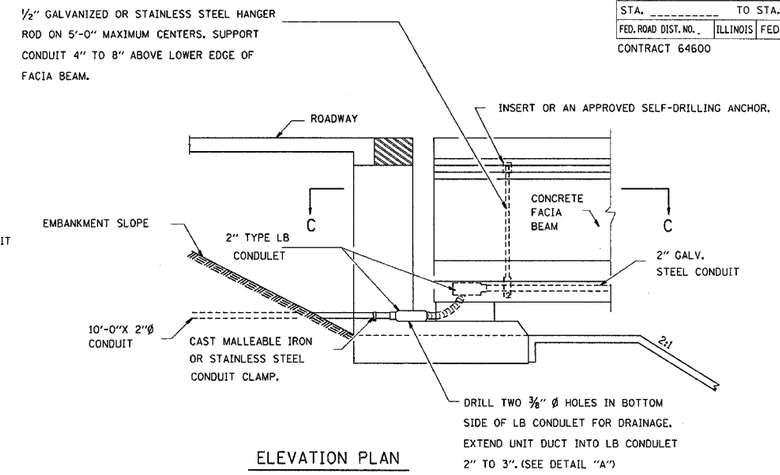

ELEVATION PLAN

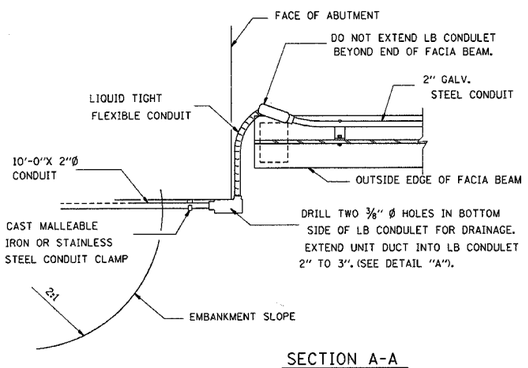

SECTION A-A

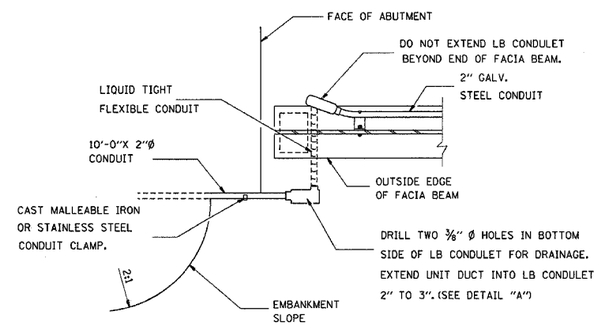

SECTION B-B

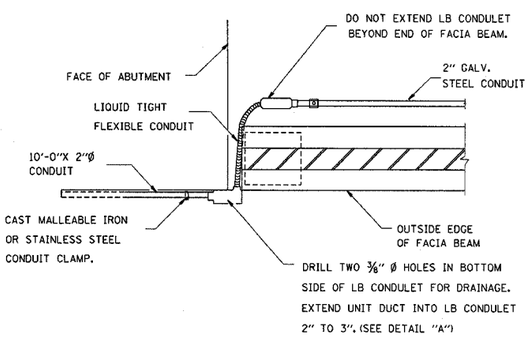

SECTION C-C

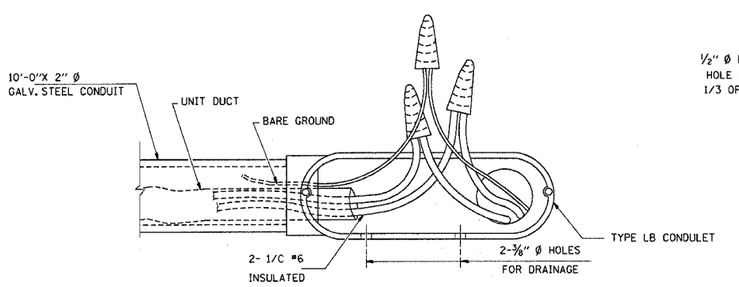

DETAIL "A"

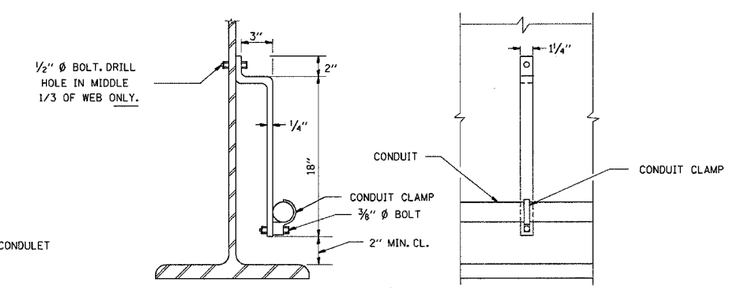

CONDUIT SUPPORT BRACKET

CONDUIT CLAMPS SHALL BE MALLEABLE IRON. LOCKNUTS, BOLTS, AND WASHERS SHALL BE STAINLESS STEEL. 1/4" STEEL BRACKET SHALL BE HOT-DIPPED GALVANIZED AFTER FABRICATION. LOCATE ON 8'-0" CENTERS.

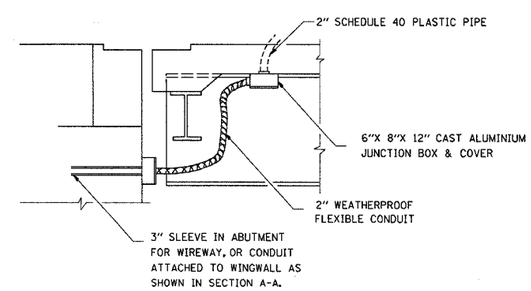

SECTION AT ABUTMENTS

REVISIONS	
NAME	DATE

ILLINOIS DEPARTMENT OF TRANSPORTATION

SCALE: VERT. HORIZ.

DATE

DRAWN BY

CHECKED BY

•DATE•TIME•
•DGN•SPEC•
•REF••
•REF••
•REF••
•REF••