F.A.I. RTE.	SECTION	COUNTY	TOTAL SHEETS	SHEET NO.
80	81-1WS-3	ROCK ISLAND	16	4
STA. _____		TO STA._____		
FED. ROAD DIST. NO. _	ILLINOIS	FED. AID PROJECT		

CONTRACT 64600

TYPICAL SECTIONS

RT STA. 92+12.00 TO 95+17.00

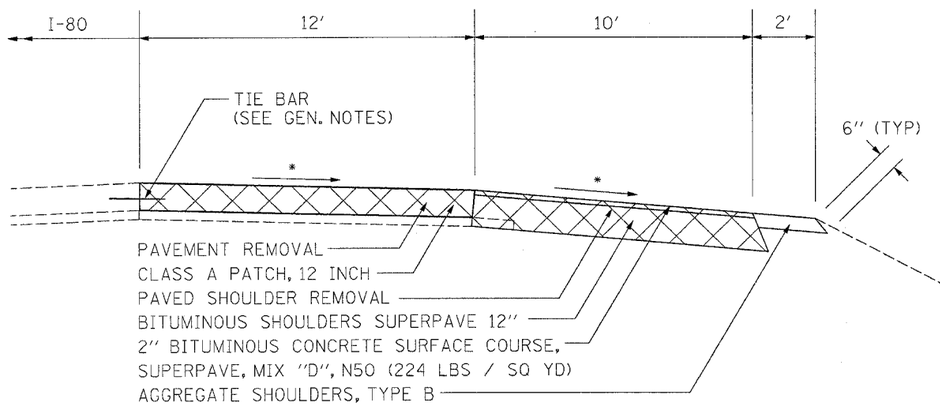

LT STA. 183+69.60 TO 186+74.50

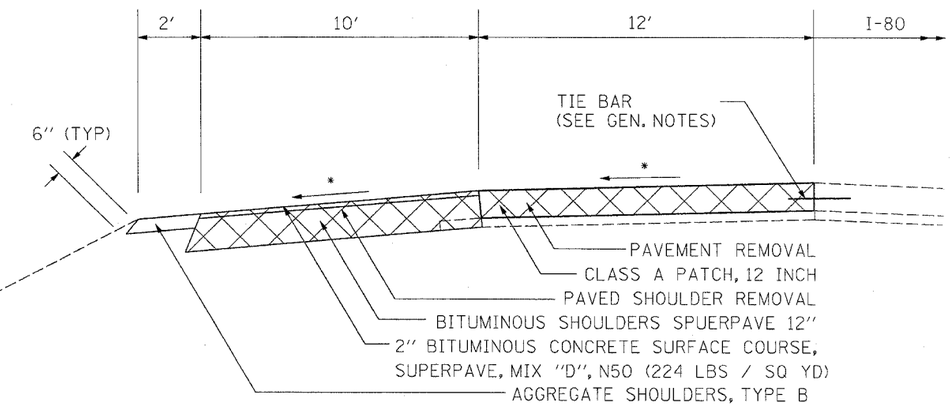

* MATCH EXISTING SLOPE

STA. 20+51.00 TO 21+26.00

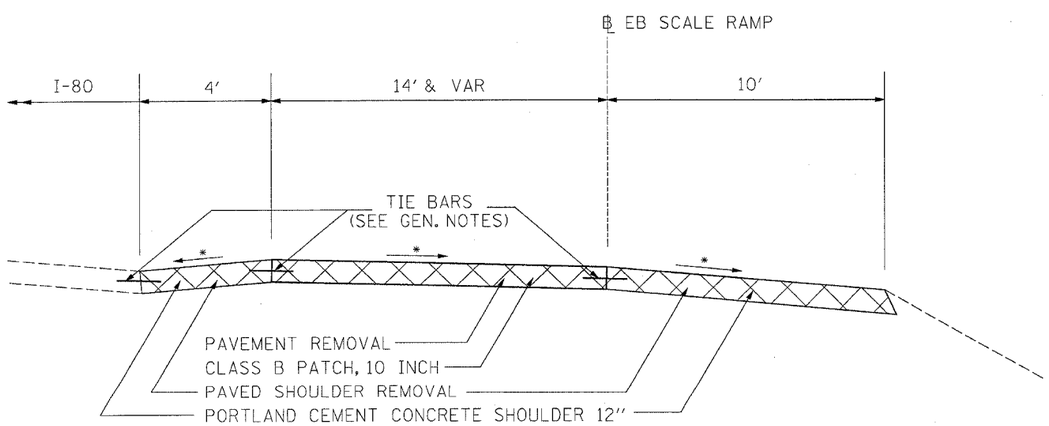

* MATCH EXISTING SLOPE

EXISTING PAVEMENT REINFORCEMENT DETAIL

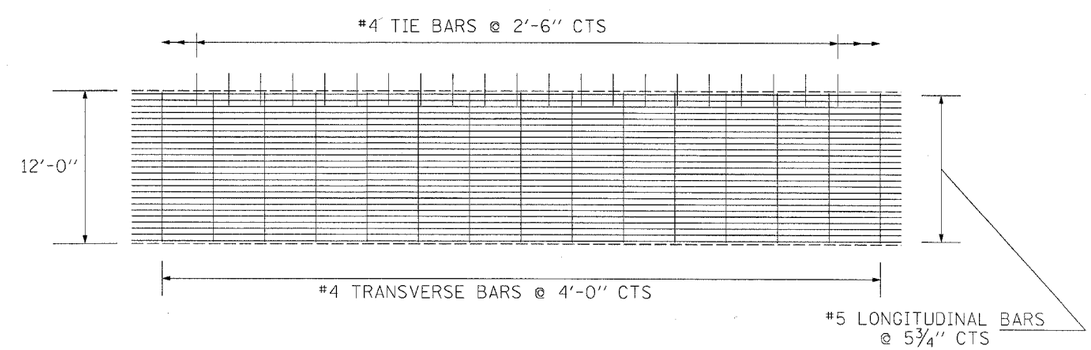

REVISIONS NAME	DATE

ILLINOIS DEPARTMENT OF TRANSPORTATION

SCALE: VERT. HORIZ.

DATE

DRAWN BY

CHECKED BY