Notes: 1. Space reinforcement in cap to miss anchor bolts.
2. Pour steps monolithically with cap.
3. All edges shall have standard 1" chamfers except as noted.
4. Reinforcement bars indicated for incorporation into the new construction that are deemed inadequate for reuse by the Engineer shall be supplemented with new reinforcement bars drilled and grouted adjacent to the existing reinforcement. Cost of drilling and grouting included with Reinforcement Bars, Epoxy Coated.

STATE OF ILLINOIS
DEPARTMENT OF TRANSPORTATION

ROUTE NO.	SECTION	COUNTY	TOTAL SHEETS	SHEET NO.
S.B.I. F.A. 567	(12)BR-1	LEE	68	38
FED. ROAD DIST. NO. 7	ILLINOIS	FED. AID PROJECT-		

SHEET NO. 18
24 SHEETS

CONTRACT NO. 64425

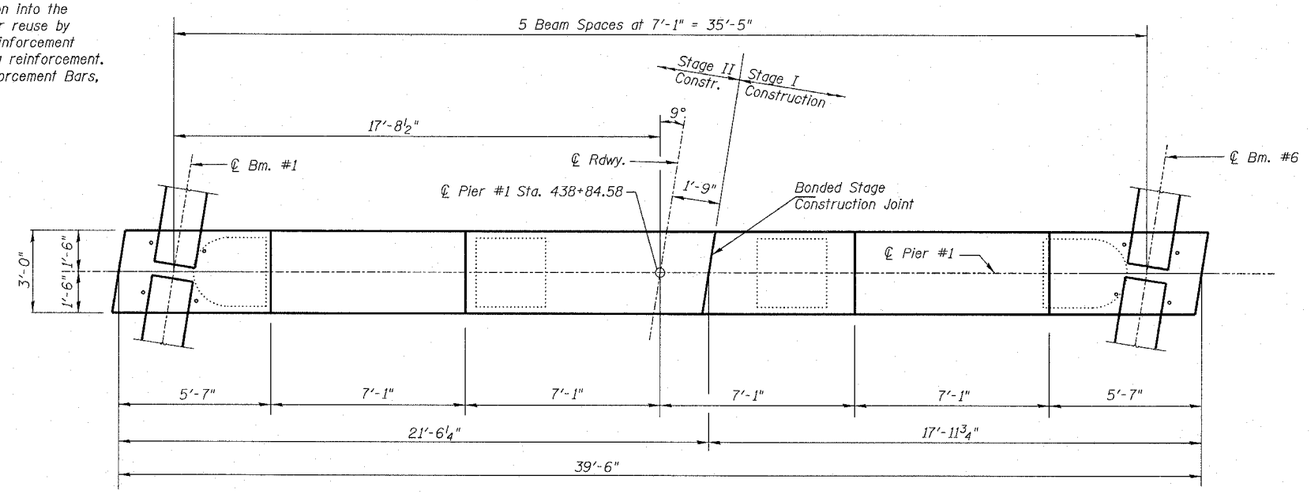

PLAN

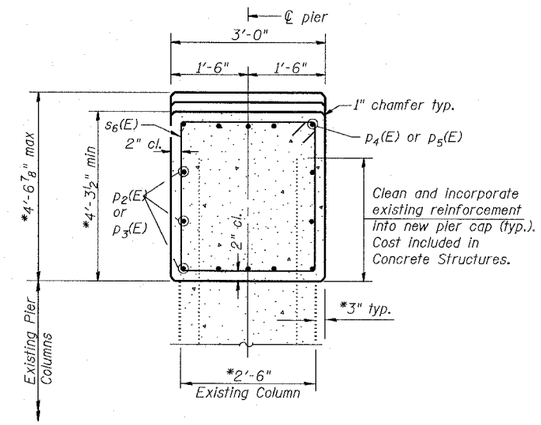

SECTION THRU PIER

* Verify in Field

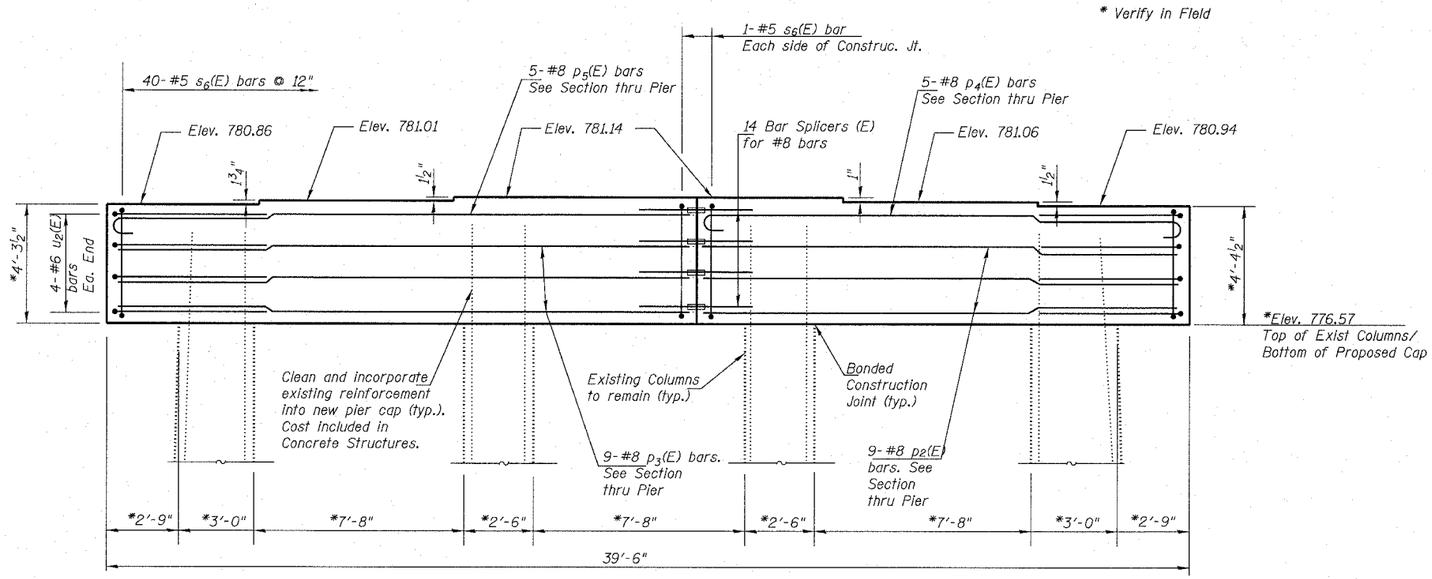

ELEVATION - LOOKING EAST

BILL OF MATERIAL - PIER #1

Bar	No.	Size	Length (ft)	Shape
p2(E)	9	#8	17'-8"	
p3(E)	9	#8	21'-2"	
p4(E)	5	#8	19'-6"	
p5(E)	5	#8	22'-1"	
s6(E)	42	#5	14'-1"	
u2(E)	8	#6	10'-8"	
Temporary Support System			Ea.	1
Concrete structures			Cu. Yd.	19.7
Reinforcement bars, epoxy coated			Lb.	2230

Reinforcement bars designated (E) shall be epoxy coated.

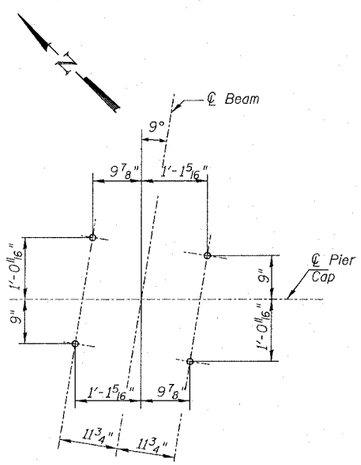

ANCHOR BOLT LAYOUT DETAIL

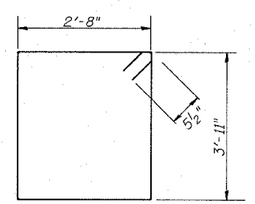

BAR s6(E)

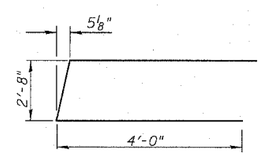

BAR u2(E)

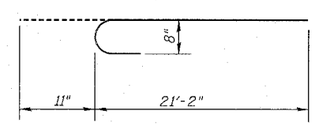

BAR p5(E)

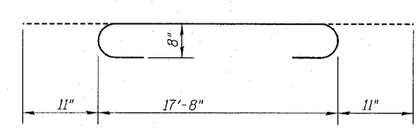

BAR p4(E)

PIER 1
IL RTE 38 OVER FRANKLIN CREEK
F.A.P. RTE 567 SECTION (12)BR-1
LEE COUNTY
STATION 439+12.17
S.N. 052-0020

DESIGNED JFJ	RANDOLPH & ASSOCIATES, INC. 911 W. FORGER PARKWAY, PEORIA, IL 61615-3134 TEL.309-670-9344 FAX.309-672-0093 +1-888-601-7021 HTTP://WWW.RANDOLPHINC.COM CONSULTING ENGINEERS • LAND SURVEYORS	FILE NUMBER	136.109
CHECKED DDB			
DRAWN JB		DATE	July 2004
CHECKED DDB			

R:\Projects\0136\0136-109 Franklin ph II\bridge plan set\18 pier1.dgn
9:01:01 AM
7/30/2004