STATE OF ILLINOIS
DEPARTMENT OF TRANSPORTATION

ROUTE NO.	SECTION	COUNTY	TOTAL SHEETS	SHEET NO.
S.B.I. F.A. 567	(12)BR-1	LEE	68	31
FED. ROAD DIST. NO. 7	ILLINOIS	FED. AID PROJECT-		

SHEET NO. 11
24 SHEETS

CONTRACT NO. 64425

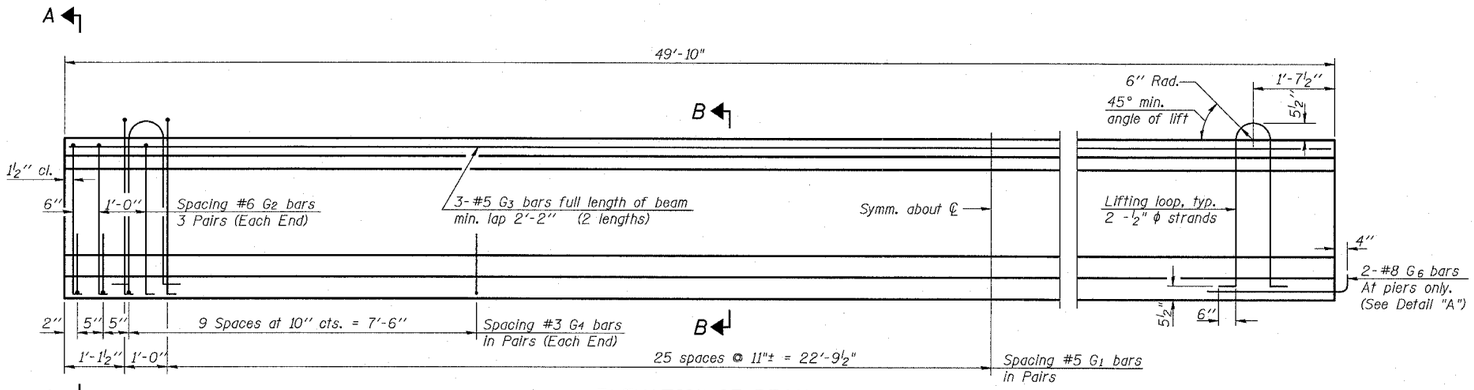

ELEVATION OF BEAM
(Showing Reinforcement & Dimensions)

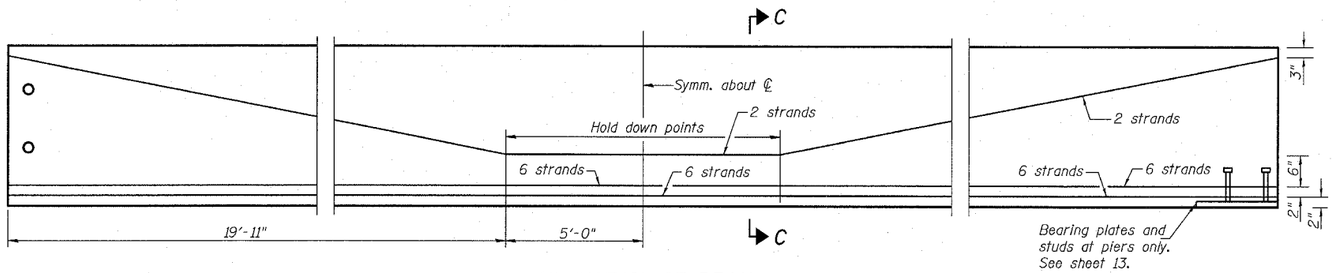

ELEVATION OF BEAM
(Showing Prestressing Steel)

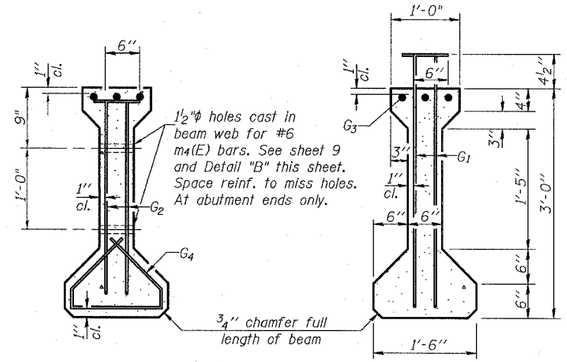

SECTION A-A

SECTION B-B

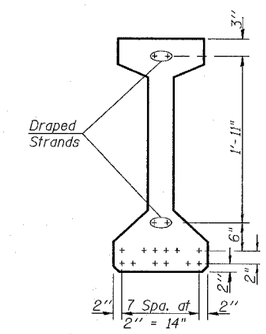

SECTION C-C

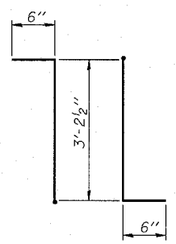

BAR G1

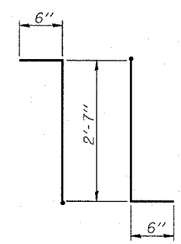

BAR G2

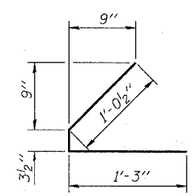

BAR G4

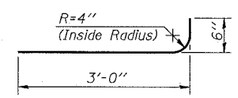

BAR G6

*BAR LIST

Bar	No.	Size	Length	Shape
G_1	106	#5	4'-2½"	7L
G_2	12	#6	3'-7"	7L
G_3	6	#5	25'-11"	—
G_4	48	#3	2'-7"	L
G_6	2	#8	3'-6"	⌣

*For one beam only.

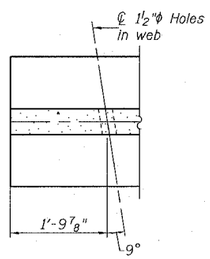

DETAIL "B"

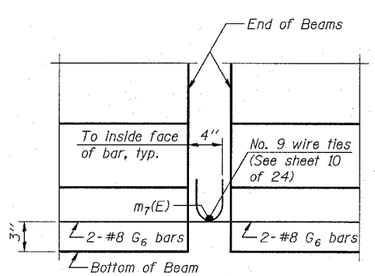

ELEVATION

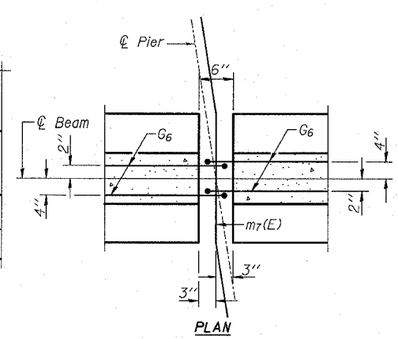

PLAN

DETAIL "A"

NOTES

Prestressing steel shall be uncoated high strength, low relaxation 7-wire strand, Grade 270.

The nominal diameter shall be ½" and the nominal cross-sectional area shall be 0.153 sq. in.

Non-prestressing steel shall conform to AASHTO designation M-31 or M 322 Grade 60.

Lifting loops shall be 2 -½"ϕ-270 ksi strands, as shown.

Required release strength, f'ci, shall be 5,000 psi.

Reinforcement bars designated (E) shall be epoxy coated.

BILL OF MATERIAL

Item	Unit	Total
Furnishing and Erecting Precast Prestressed Concrete I-Beams, 36"	Ft.	598

BEAM DETAILS - SPANS 1 & 3
IL RTE 38 OVER FRANKLIN CREEK
F.A.P. RTE 567 SECTION (12)BR-1
LEE COUNTY
STATION 439+12.17
S.N. 052-0020

DESIGNED JFJ	RANDOLPH & ASSOCIATES, INC. 701 N. PIONEER PARKWAY, PEORIA, IL 61615-1524 TEL.309-692-6944 FAX.309-692-6008 1-800-521-9021 HTTP://WWW.RANDOLPHENG.COM CONSULTING ENGINEERS • LAND SURVEYORS	FILE NUMBER 136.109
CHECKED DDB		
DRAWN JB		DATE July 2004
CHECKED DDB		

PI-4-36 9-1-03

R:\Projects\0136\0136-109 Franklin ph 1\bridge plan set\11 span1&3beam.dgn 8:58:34 AM 7/30/2004