F.A. RTE.	SECTION	COUNTY	TOTAL SHEETS	SHEET NO.
316	115 BR-1	BUREAU	28	25
STA.		TO STA.		
FED. ROAD DIST. NO. _	ILLINOIS	FED. AID PROJECT		

CONTRACT NO. 64424

BITUMINOUS APPROACHES & MAILBOX TURNOUTS

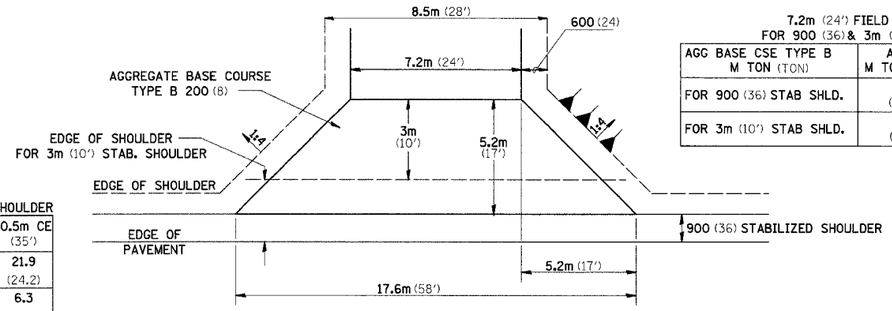

FIELD ENTRANCE

7.2m (24') FIELD ENTRANCE FOR 900 (36) & 3m (10') SHOULDERS

AGG BASE CSE TYPE B M TON (TON)	APRON M TON (TON)	PER METER (FOOT) ADD. RUN
FOR 900 (36) STAB SHLD.	31.3 (35.3)	3.5 (1.2)
FOR 3m (10') STAB SHLD.	14.9 (17.2)	3.5 (1.2)

PE & CE FOR 3m (10') STAB. SHOULDER

	3.6m PE (12')	10.5m CE (35')
AGG BASE CSE (TON)	11.4 (12.6)	21.9 (24.2)
INC BIT SURF (TON)	3.1 (3.4)	6.3 (7.0)
PRIME (TON)	0.04 (0.04)	0.06 (0.07)

	900 (36)	1.5m (5')
AGG BASE CSE T-B (TON)	10.7 (11.8)	14.4 (15.9)
INC BIT SURF 50 (2) (TON)	2.2 (2.4)	3.4 (3.8)
BIT PRIME COAT (TON)	0.02 (0.02)	0.04 (0.04)

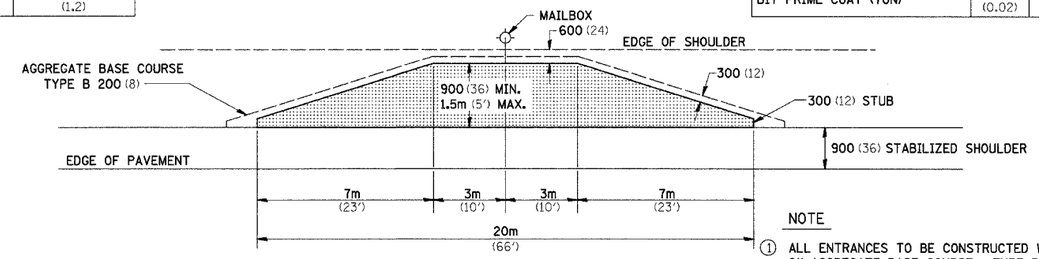

MAILBOX TURNOUT

10.5m (35') COMMERCIAL ENTRANCE FOR 900 (36) STAB. SHOULDER

	900 (36)	1.5m (5')	PER METER ENTR (FOOT)
AGG BASE CSE T-B (TON)	47.4 (52.2)	48.7 (53.7)	5.7 (1.9)
INC BIT SURF 50 (2) (TON)	13.4 (14.8)	14.0 (15.4)	1.6 (0.55)
BIT PRIME COAT (TON)	0.14 (0.15)	0.15 (0.16)	0.018 (0.006)

NOTE

1. ALL ENTRANCES TO BE CONSTRUCTED WITH AN 8" AGGREGATE BASE COURSE, TYPE B AND WITH A 2" BITUMINOUS SURFACING, UNLESS OTHERWISE NOTED.
2. TURNOUTS ARE TO BE CONSTRUCTED ON THE APPROACH SIDE OF ALL PE & CE REGARDLESS IF A MAILBOX IS PRESENT.
3. ALL PE & CE ARE TO BE SURFACED TO RIGHT OF WAY LINE. AREA BEHIND RIGHT OF WAY SHALL MATCH EXISTING SURFACE.
4. FE ARE TO BE AGGREGATE TO RIGHT OF WAY OR TOUCH DOWN WHICH EVER IS GREATER.
5. QUANTITIES SHOWN ARE FOR NEW CONSTRUCTION.
6. ALL DIMENSIONS ARE IN MILLIMETERS (INCHES) UNLESS OTHERWISE NOTED.

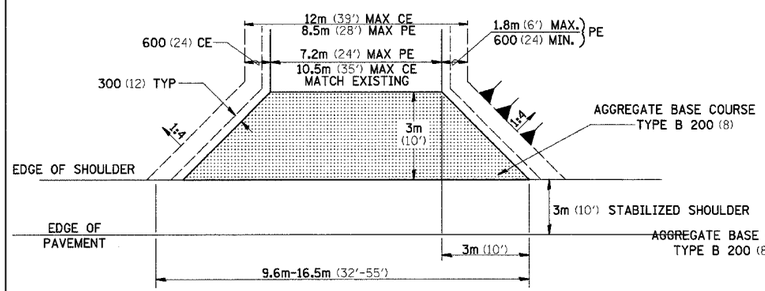

PE & CE FOR 3m (10') STAB. SHOULDERS

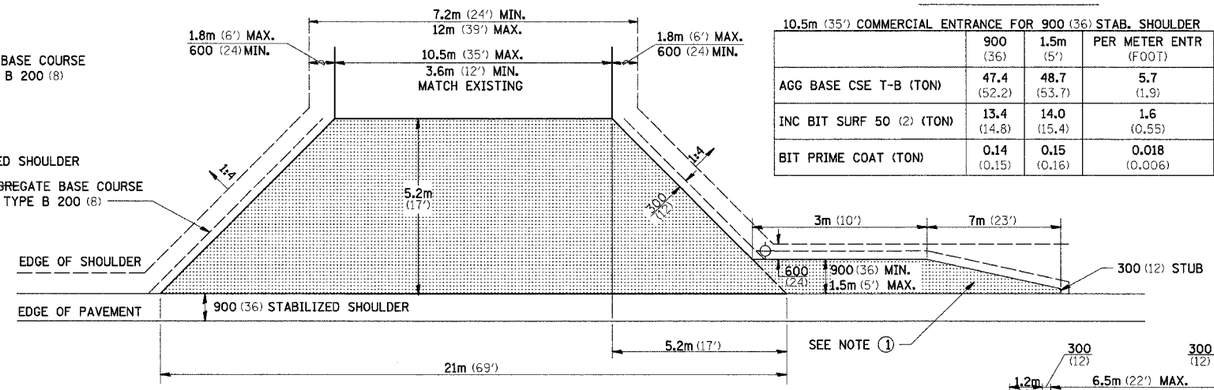

CE FOR 900 (36) STAB. SHOULDERS

3.6m (12') PRIVATE ENTRANCE FOR 900 (36) STAB. SHOULDER

	900 (36)	1.5m (5')	PER METER ENTR (FOOT)
AGG BASE CSE (TON)	29.4 (32.4)	30.8 (33.9)	0.64 (0.7)
INC BIT SURF 50 (2) (TON)	7.8 (8.6)	8.4 (9.3)	0.17 (0.19)
BIT PRIME COAT (TON)	0.08 (0.09)	0.09 (0.10)	0.006 (0.002)

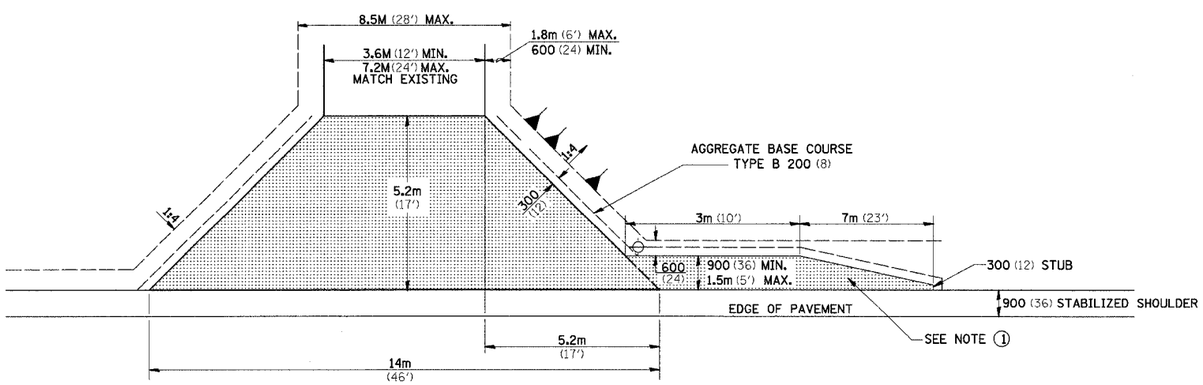

PRIVATE ENTRANCE FOR 900 (36) STAB. SHOULDERS

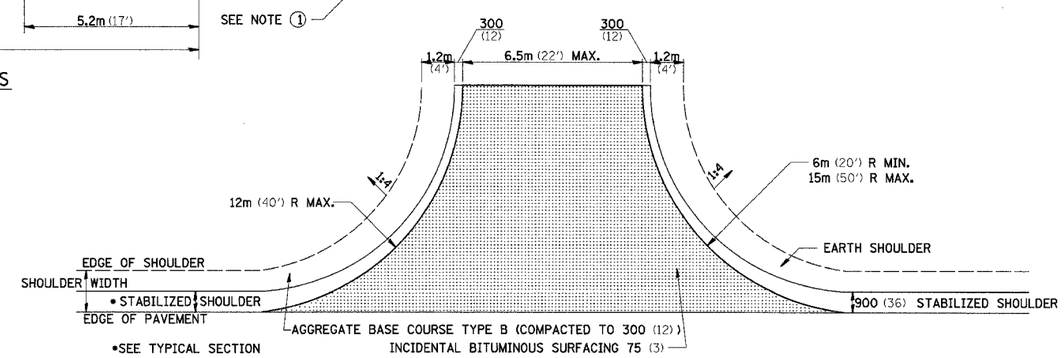

SIDE ROAD RETURN

	6m (20') RADIUS			9m (30') RADIUS			12m (40') RADIUS		
	5.5m (18')	6m (20')	6.5m (22')	5.5m (18')	6m (20')	6.5m (22')	5.5m (18')	6m (20')	6.5m (22')
AGG BASE CSE T-B (TON)	20 (22.1)	21.6 (23.8)	23.1 (25.5)	37 (40.8)	39.5 (43.5)	42 (46.3)	57.9 (63.8)	61.3 (67.6)	64.7 (71.3)
INC BIT SURF 75 (3) (TON)	5.5 (6.1)	6.2 (6.8)	6.6 (7.25)	10.5 (11.6)	11.2 (12.4)	12.1 (13.3)	16.7 (18.4)	17.7 (19.5)	18.7 (20.6)
BIT PRIME CSE T-B (TON)	0.05 (0.06)	0.06 (0.07)	0.06 (0.07)	0.11 (0.12)	0.11 (0.12)	0.12 (0.13)	0.16 (0.18)	0.18 (0.20)	0.19 (0.21)

NOTE: USE 50 (2) INC. BIT. SURF. ON EXISTING RETURNS

21.1

REVISED 5/15/90