| F.A. RTE. | SECTION | COUNTY | TOTAL SHEETS | SHEET NO |
|---|---|---|---|---|
| 88 | 103C-BR | BUREAU | 51 | 37 |
| STA. 19+00 | | TO STA. 39+00 | | |
| FED. ROAD DIST. NO. 7 | ILLINOIS | FED. AID PROJECT | | |

# AUTOMATIC FLAP GATES

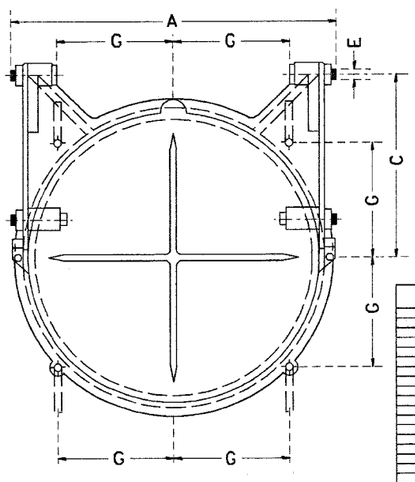


FRONT ELEVATION

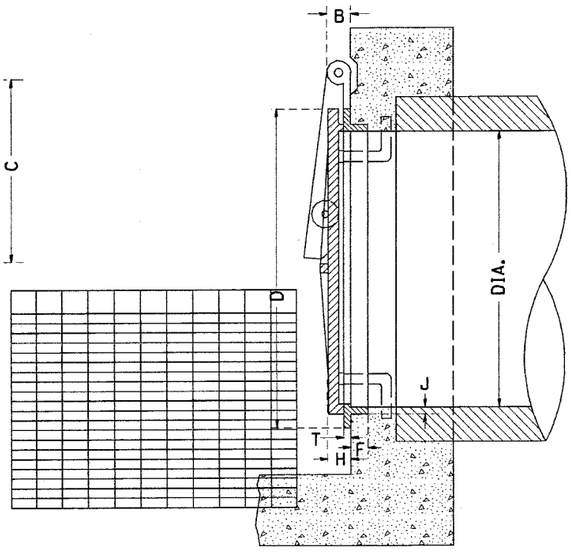


SECTION

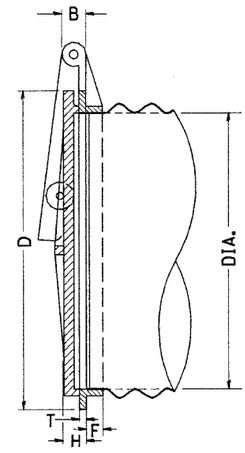


SECTION SHOWING METHOD OF APPLICATION TO CORRUGATED METAL PIPE

IT IS INTENTED THAT THE AUTOMATIC FLAP GATES SHALL BE A COMMERCIAL PRODUCT PRODUCED BY A RELIABLE MANUFACTURER. THE GATE MAY BE MADE OF CAST IRON, CAST STEEL OR OTHER SUITABLE MATERIALS. THE DESIGN MAY DIFFER FROM THE DRAWING IF IT WILL WORK IN A SATISFACTORY, TROUBLE FREE MANNER AND WILL WITHSTAND THE WATER PRESSURE AT THE INSTALLATION LOCATION. THE GATE SHALL BE APPROVED BY THE ENGINEER.

THE SIZE OF AUTOMATIC FLAP GATES SHALL REFER TO THE DIAMETER OF THE OUTLET PIPE OR OPENING.

THIS WORK SHALL BE PAID FOR AT THE CONTRACT UNIT PRICE EACH FOR FLAP GATES OF THE SIZE SPECIFIED AND SHALL INCLUDE ALL MATERIALS AND COMPLETE INSTALLATION.

ALL DIMENSIONS ARE IN MILLIMETERS (INCHES) UNLESS OTHERWISE NOTED.

TABLE OF DIMENSIONS

| DIAM | A | B | C | D | E | F | G | H | J | T |
|---|---|---|---|---|---|---|---|---|---|---|
| 200 (8) | 273 (10 3/4) | 35 (1 3/8) | 144 (5 11/16) | 254 10 | 13 (1/2) | 29 (1 1/8) | 90 (3 9/16) | 32 (1 1/4) | 19 (3/8) | 10 (3/8) |
| 250 (10) | 324 (12 3/4) | 35 (1 3/8) | 181 (7 1/8) | 311 (12 1/4) | 13 (1/2) | 29 (1 1/8) | 111 (4 3/8) | 38 (1 1/2) | 13 (1/2) | 11 (7/16) |
| 300 (12) | 375 (14 3/4) | 35 (1 3/8) | 216 (8 1/2) | 368 (14 1/2) | 13 (1/2) | 29 (1 1/8) | 130 (5 1/8) | 38 (1 1/2) | 13 (1/2) | 13 (1/2) |
| 350 (14) | 438 (17 1/4) | 35 (1 3/8) | 251 (9 7/8) | 425 (16 3/4) | 13 (1/2) | 32 (1 1/4) | 151 (5 15/16) | 38 (1 1/2) | 13 (1/2) | 14 (9/16) |
| 375 (15) | 451 (17 3/4) | 35 (1 3/8) | 270 (10 5/8) | 451 (17 3/4) | 13 (1/2) | 32 (1 1/4) | 159 (6 1/4) | 38 (1 1/2) | 13 (1/2) | 14 (9/16) |
| 400 (16) | 489 (19 1/4) | 35 (1 3/8) | 286 (11 1/4) | 476 (18 3/4) | 13 (1/2) | 32 (1 1/4) | 168 (6 5/8) | 38 (1 1/2) | 13 (1/2) | 14 (9/16) |
| 450 (18) | 565 (22 1/4) | 51 2 | 321 (12 5/8) | 533 21 | 19 (3/4) | 40 (1 9/16) | 189 (7 7/16) | 44 (1 3/4) | 14 (9/16) | 14 (9/16) |
| 500 (20) | 629 (24 3/4) | 51 2 | 359 (14 1/8) | 603 (23 3/4) | 19 (3/4) | 35 (1 3/8) | 210 (8 1/4) | 44 (1 3/4) | 16 (5/8) | 16 (5/8) |
| 525 (21) | 641 (25 1/4) | 51 2 | 378 (14 7/8) | 616 (24 1/4) | 19 (3/4) | 35 (1 3/8) | 217 (8 9/16) | 44 (1 3/4) | 16 (5/8) | 16 (5/8) |
| 600 (24) | 718 (28 1/4) | 51 2 | 432 17 | 699 (27 1/2) | 19 (3/4) | 38 (1 1/2) | 248 (9 3/4) | 44 (1 3/4) | 16 (5/8) | 16 (5/8) |
| 750 (30) | 895 (35 1/4) | 64 (2 1/2) | 521 (20 1/2) | 864 34 | 25 1 | 40 (1 9/16) | 305 12 | 51 2 | 27 (1 1/16) | 16 (5/8) |
| 900 (36) | 1054 (41 1/2) | 64 (2 1/2) | 635 25 | 1038 (40 7/8) | 25 1 | 52 (2 1/16) | 367 (14 7/16) | 57 (2 1/4) | 29 (1 1/8) | 17 (11/16) |
| 1050 (42) | 1207 (47 1/2) | 64 (2 1/2) | 756 (29 3/4) | 1194 47 | 25 1 | 59 (2 5/16) | 422 (16 5/8) | 57 (2 1/4) | 29 (1 1/8) | 19 (3/4) |
| 1200 (48) | 1359 (53 1/2) | 64 (2 1/2) | 864 34 | 1372 54 | 25 1 | 70 (2 3/4) | 484 (19 1/16) | 57 (2 1/4) | 35 (1 3/8) | 19 (3/4) |
| 1350 (54) | 1543 (60 3/4) | 64 2 1/2 | 965 38 | 1581 (62 1/4) | 32 (1 1/4) | 70 (2 3/4) | 559 22 | 76 3 | 38 (1 1/2) | 22 (7/8) |
| 1500 (60) | 1702 (67) | 64 (2 1/2) | 1067 42 | 1740 (68 1/2) | 32 (1 1/4) | 70 (2 3/4) | 616 (24 1/4) | 76 3 | 38 (1 1/2) | 24 (15/16) |
| 1650 (66) | 1855 (73 3/8) | 64 (2 1/2) | 1194 47 | 1905 75 | 32 (1 1/4) | 73 (2 7/8) | 673 (26 1/2) | 76 3 | 38 (1 1/2) | 25 1 |
| 1800 (72) | 2007 (79) | 64 (2 1/2) | 1295 51 | 2083 82 | 32 (1 1/4) | 76 3 | 737 29 | 76 3 | 38 (1 1/2) | 25 1 |
| 1950 (78) | 2184 (86) | 64 (2 1/2) | 1403 (55 1/4) | 2254 (88 3/4) | 32 (1 1/4) | 89 (3 1/2) | 797 (31 3/8) | 76 3 | 41 (1 5/8) | 29 (1 1/8) |
| 2100 (84) | 2350 (92 1/2) | 89 (3 1/2) | 1511 (59 1/2) | 2426 (95 1/2) | 38 (1 1/2) | 89 (3 1/2) | 857 (33 3/4) | 76 3 | 44 (1 3/4) | 32 (1 1/4) |

Tue Nov 04 11:04:58 2003
c:\projects\d2dstnds\73p12.dgn