FIELD TILE JUNCTION VAULTS
600 (24) AND 900 (36) DIA.

F.A. RTE.	SECTION	COUNTY	TOTAL SHEETS	SHEET NO
88	103C-BR	BUREAU	51	36
STA. 19+00		TO STA. 39+00		
FED. ROAD DIST. NO. 7	ILLINOIS	FED. AID PROJECT		

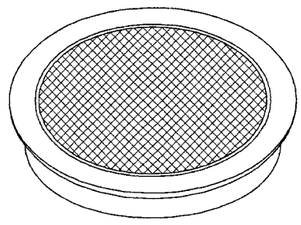

FRAME & LID FOR
600 (24) VAULT

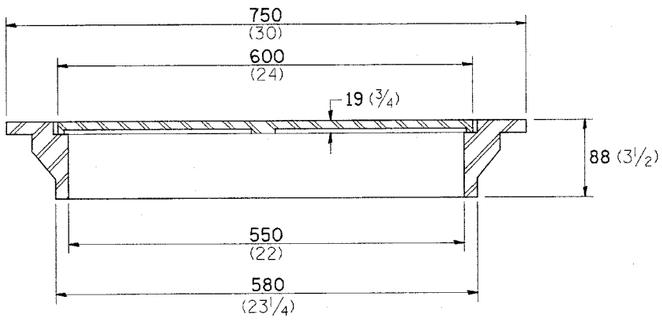

TOTAL WEIGHT: 66 Kg (146 lbs)

FRAME & LID FOR
900 (36) VAULT

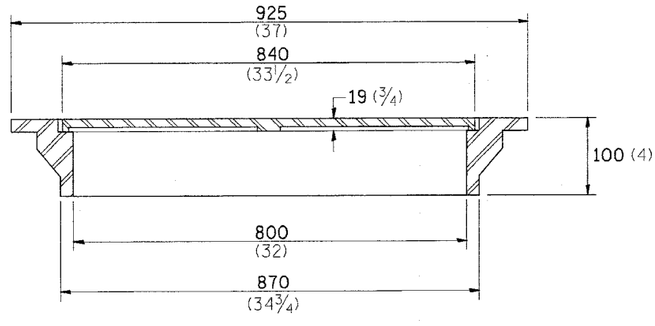

TOTAL WEIGHT: 127 Kg (280 lbs)

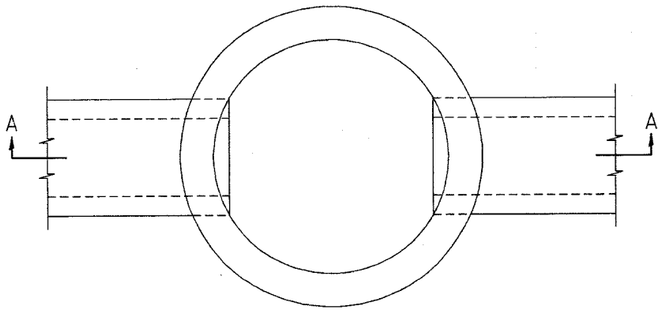

PLAN

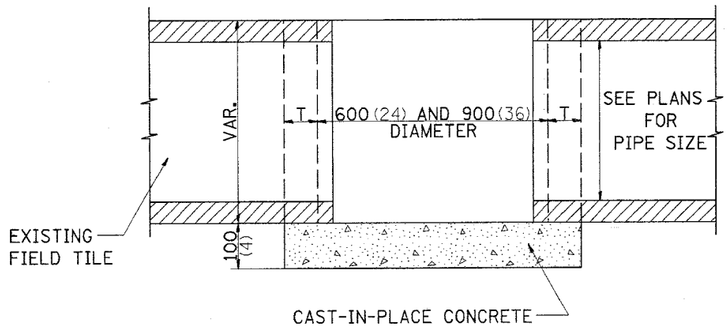

SECTION A-A

ALTERNATE MATERIALS FOR WALLS	T
BRICK MASONRY	200 (8)
CAST-IN-PLACE CONCRETE	150 (6)
CONCRETE MASONRY UNIT	125 (5)
PRECAST REINFORCED CONCRETE SECTION	75 (3)

NOTE: THE FRAME AND LID IS REQUIRED ON ALL JUNCTION VAULTS.

ALL DIMENSIONS ARE IN MILLIMETERS (INCHES) UNLESS OTHERWISE SHOWN.

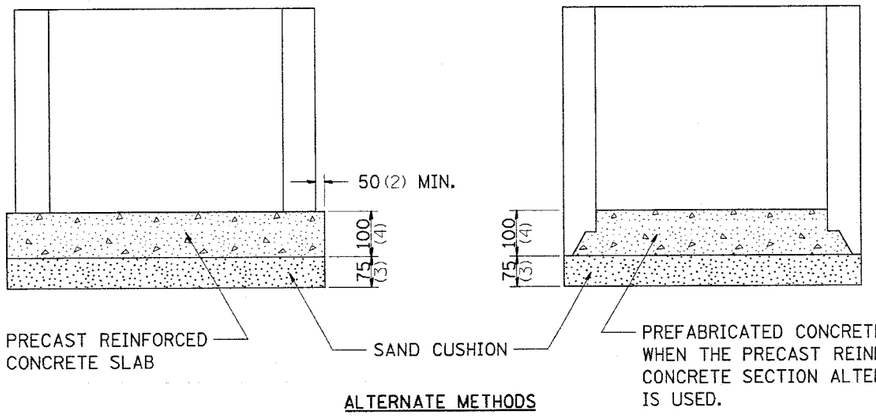

ALTERNATE METHODS

Tue Nov 04 11:04:50 2003
c:\projects\d2stnds\230pt2.dgn

REVISED 05-03-94 30.2

(4143)