ROUTE NO.	SECTION	COUNTY	TOTAL SHEETS	SHEET NO.
FAP 17	(123WPH) BR-1	OGLE	10	29
FEDERAL ROAD DISTRICT NUMBER 7		ILLINOIS	FEDERAL AID PROJECT -	

SHEET NO. 2
10 SHEETS

CONTRACT #64417

STATE OF ILLINOIS
DEPARTMENT OF TRANSPORTATION

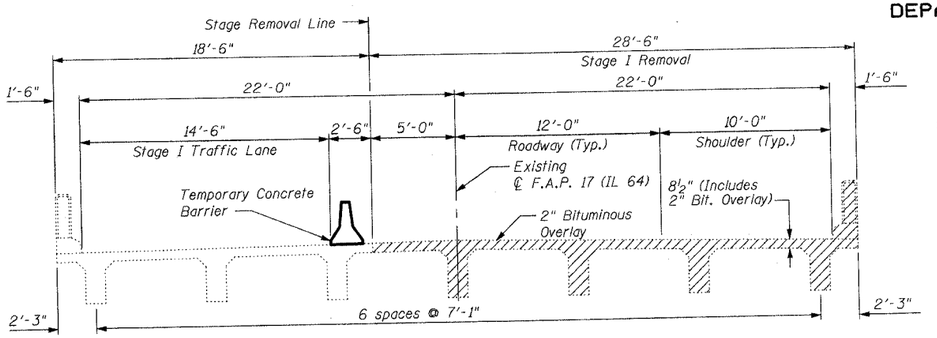

STAGE I REMOVAL AND TRAFFIC CONTROL

Looking East

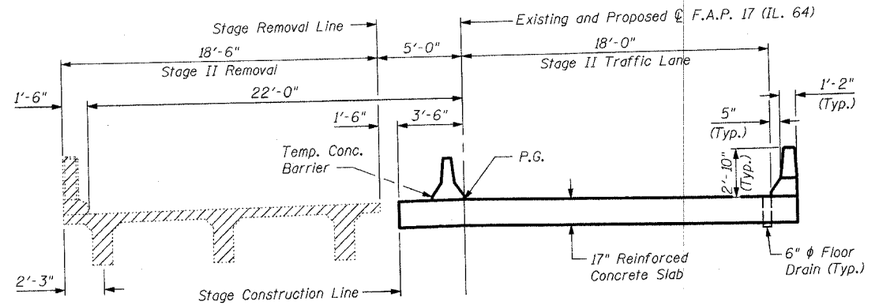

STAGE II REMOVAL AND TRAFFIC CONTROL

Looking East

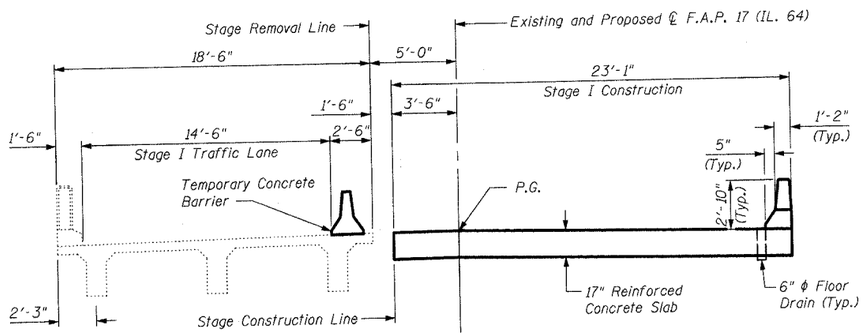

STAGE I CONSTRUCTION AND TRAFFIC CONTROL

Looking East

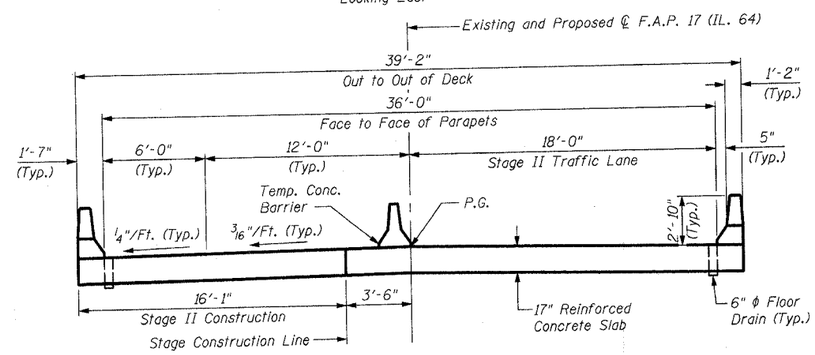

STAGE II CONSTRUCTION AND TRAFFIC CONTROL

Looking East

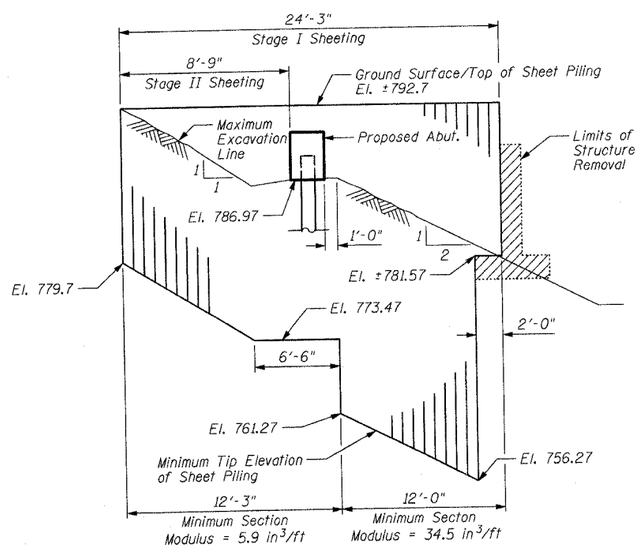

WEST ABUTMENT

(Looking North)

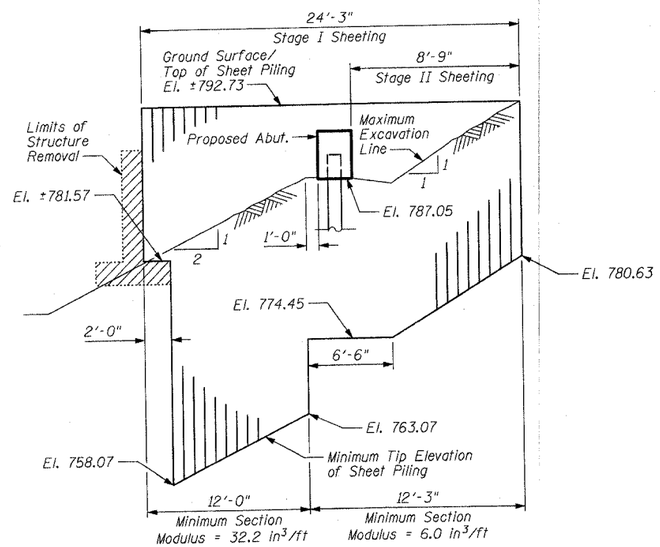

EAST ABUTMENT

(Looking North)

SHEET PILING DETAILS

STAGE I CONSTRUCTION

1. Place temporary concrete barriers and shift traffic to one lane to locations shown in Stage I Removal and Traffic Control.
2. Drive temporary sheet piling.
3. Excavate to approximate proposed grade elevation behind existing abutments and sawcut abutment along stage removal line.
4. Remove the superstructure and substructure as shown in Stage I Removal and Traffic Control.
5. Perform Stage I Construction as shown in Stage I Construction and Traffic Control.

STAGE II CONSTRUCTION

1. Place temporary construction barrier and shift traffic to locations shown in Stage II Removal and Traffic Control.
2. Remove/Adjust portions of sheet piling as required.
3. Excavate to approximate proposed grade elevation behind existing abutments.
4. Remove remaining portions of existing superstructure and substructure.
5. Perform Stage II Construction as shown in Stage II Construction and Traffic Control.

Notes:

Stage removal and construction is the same for existing and proposed abutments and piers.

Hatched area indicates removal of existing structure.

For details of Temporary Concrete Barrier, see Sheet 3 of 10. For quantities of Temporary Concrete Barrier, see Roadway Plans.

If the contractor chooses to alter the temporary contilevered sheet piling design requirements shown on the plans, a design submittal including plan details and calculations will be required for review and acceptance by the Engineer.

The contractor shall connect the first sheet to the existing abutment wall to ensure stability of sheet driven to the top of the existing footing. This connection shall be reviewed and accepted by the Engineer and included in the cost for Temporary Sheet Piling.

DESIGNED	KJW
CHECKED	AJS
DRAWN	KJW
CHECKED	AJS

STRAND ASSOCIATES, INC. ENGINEERS

ILLINOIS DEPARTMENT OF TRANSPORTATION
STAGE CONSTRUCTION DETAILS
IL 64 OVER TRIBUTARY TO KILBUCK CREEK
F.A.P. RTE. 17 SECTION (123WPH) BR-1
OGLE COUNTY
STA. 266+38
S.N. 071-0091

SCALE: DATE: 06/23/2004