STATE OF ILLINOIS
DEPARTMENT OF TRANSPORTATION

ROUTE NO.	SECTION	COUNTY	TOTAL SHEETS	SHEET NO.
F.A.P. Rt. 305	28 R-HB-F	McHenry	13	13
FED. ROAD DIST. NO. 1	ILLINOIS	FED. AID PROJECT-		

CONTRACT NUMBER: 62B56

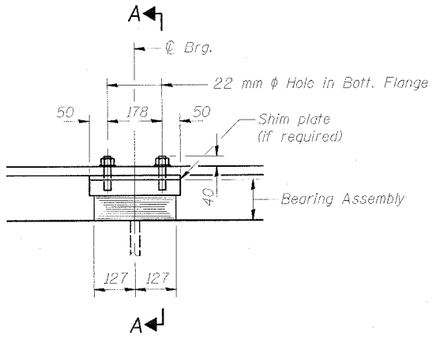

ELEVATION AT PIERS

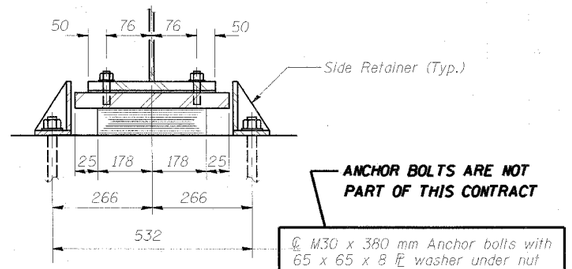

SECTION A-A

TYPE I ELASTOMERIC EXP. BRG.

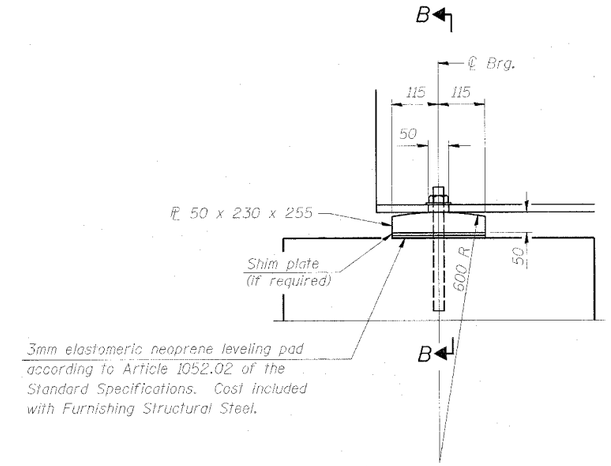

ELEVATION AT ABUTMENT

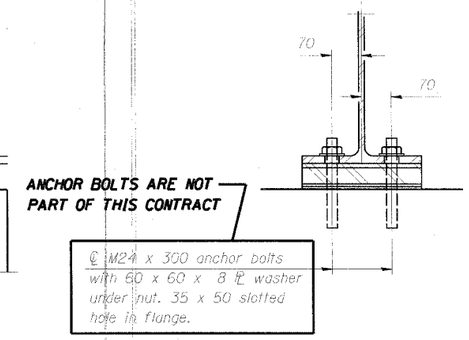

SECTION B-B

FIXED BEARING

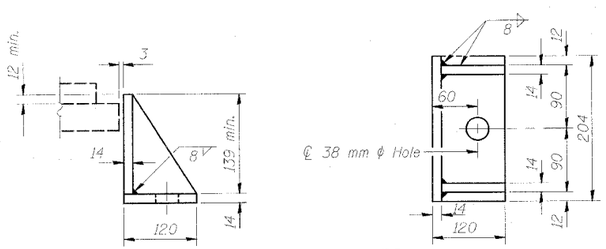

SIDE RETAINER

Equivalent rolled angle with stiffeners will be allowed in lieu of welded plates. Mass included with Furnishing Structural Steel.

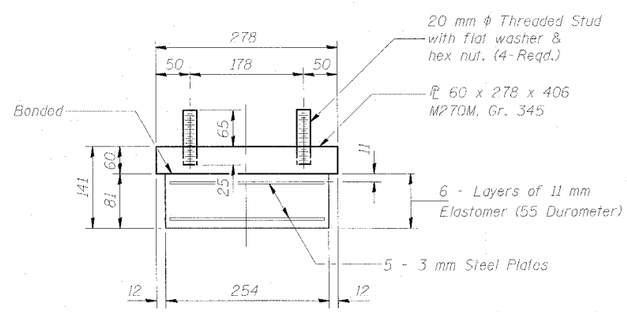

BEARING ASSEMBLY

Note: Shim plates shall not be placed under Bearing Assembly.

BILL OF MATERIAL

Item	Unit	Total
Furnishing Elastomeric Bearing Assembly, Type I	Each	18

BEARING DETAILS

Date	Designed MR	SOUTH ST. OVER US 14 FAP ROUTE NO. 305 SECTION 28 R-HB-F STATION 29+999.897 COUNTY McHENRY STRUCTURE NO. 056-3015	Sheet No. 13 of 13
Revisions	Drawn R.VEJAR		
	Checked KSM		
	Approved KSM		

HOH — HARRY O. HEFTER-ASSOCIATES, INC. DESIGN AND CONSULTING ENGINEERS — 120 North Wabash Ave. Chicago, Illinois 60601 312/346-8151 — File Name: — Job No. 1962

09/10/2004 11:22:53 AM

g:\PROJECTS\1962\BRIDGE\SIDEWALK_REV\BEAM_FAB\1962S16.dgn

...\BEAM_FAB\1962S16.dgn 09/10/2004 11:22:53 AM