STATE OF ILLINOIS
DEPARTMENT OF TRANSPORTATION

ROUTE NO.	SECTION	COUNTY	TOTAL SHEETS	SHEET NO.
F.A.P. Rt. 305	28 R-HB-F	McHenry	13	12
FED. ROAD DIST. NO. 1	ILLINOIS	FED. AID PROJECT-		

62856

TOP OF BEAM ELEVATIONS

Beam #	℄ W. ABUT	℄ Brg. Pier 1	℄ Splice #1	℄ Brg. Pier 2	℄ Splice #2	℄ Brg. Pier 3	℄ Splice #3	℄ E. ABUT
1	290.397	290.473	290.488	290.505	290.509	290.434	290.419	290.337
2	290.382	290.458	290.474	290.492	290.496	290.422	290.407	290.326
3	290.407	290.484	290.500	290.519	290.523	290.450	290.436	290.355
4	290.431	290.510	290.526	290.546	290.550	290.477	290.463	290.383
5	290.403	290.482	290.498	290.520	290.524	290.452	290.438	290.359
6	290.374	290.451	290.470	290.492	290.497	290.426	290.412	290.334

INTERIOR BEAM REACTION TABLE			
	E. Abut. & W. Abut.	Pier #1 & Pier #3	Pier #2
R℄ (kN)	70.9 kN	253.2 kN	276.4 kN
R℄ (kN)	123.6 kN	154.6 kN	156.5 kN
Imp. (kN)	37.1 kN	35.6 kN	32.9 kN
R (Total) (kN)	231.6 kN	443.4 kN	465.8 kN

INTERIOR GIRDER MOMENT TABLE					
		0.4 Sp. 1 0.5 Sp. 4	Pier 1 Pier 3	0.5 Sp. 2 0.5 Sp. 3	Pier 2
	Is (10^6 mm^4)	1,190	1,190	1,190	1,190
	Ic (n) (10^6 mm^4)	3,607	-	3,607	-
	Ic (3n) (10^6 mm^4)	2,672	-	2,672	-
	Ss (10^3 mm^3)	3,510	3,510	3,510	3,510
	Sc (n) (10^3 mm^3)	5,490	-	5,490	-
	Sc (3n) (10^3 mm^3)	4,957	-	4,957	-
	Z (10^3 mm^3)	-	-	-	-
	w (kN/m)	9.69	16.05	9.69	16.05
	M℄ (kN·m)	87.9	310.2	119.7	371.6
	s℄ (kN/m)	6.36	-	6.36	-
	Ms℄ (kN·m)	67.4	-	103.3	-
	M℄ (kN·m)	268.2	166.1	366.3	190.2
	M (Imp) (kN·m)	80.5	48.2	102.6	53.3
	$\frac{5}{3}$[M℄+M(Imp)] (kN·m)	581.1	357.1	781.4	405.8
	Ma (kN·m)	957.2	867.5	1,305.7	1,010.6
*	Mu (kN·m)	2,005.0	-	2,166.0	-
	fs℄ non-comp (MPa)	25.0	88.4	34.1	105.9
	fs℄ (comp) (MPa)	13.6	-	20.8	-
	fs $\frac{5}{3}$(℄+Imp) (MPa)	105.8	101.7	142.3	115.6
	fs (Overload) (MPa)	144.5	190.1	197.3	221.5
**	fs (Total) (MPa)	-	247.1	-	287.9
	VR (kN)	178.0	-	199.0	-

* Compact, Braced section.
** Non-Compact section.

Is and Ss are the moment of inertia and section modulus of the steel section used in computing fs (Total & Overload).

Ic(n) and Sc(n) are the moment of inertia and section modulus of the composite section used in computing stresses due to Live Load.

Ic(3n) and Sc(3n) are the moment of inertia and section modulus of the composite section used in computing stresses due to superimposed dead loads.

VR is the maximum Live Load + Impact shear range in span.

Z is the plastic section modulus used to determine the fully plastic moments in the non-composite areas.

Ma (Applied Moment)=1.3[M℄ + Ms℄ + $\frac{5}{3}$(M℄ + M_{imp})].

The Plastic Moment capacity (Mu) is computed according to AASHTO 10.48.1 and 10.50.1.1.

fs (Overload) is the sum of the stresses due to M℄ + Ms℄ + $\frac{5}{3}$(M℄ + M_{imp}).

fs (Total) (Non-compact section) is the sum of the stresses due to 1.3[M℄ + Ms℄ + $\frac{5}{3}$(M℄ + M_{imp})].

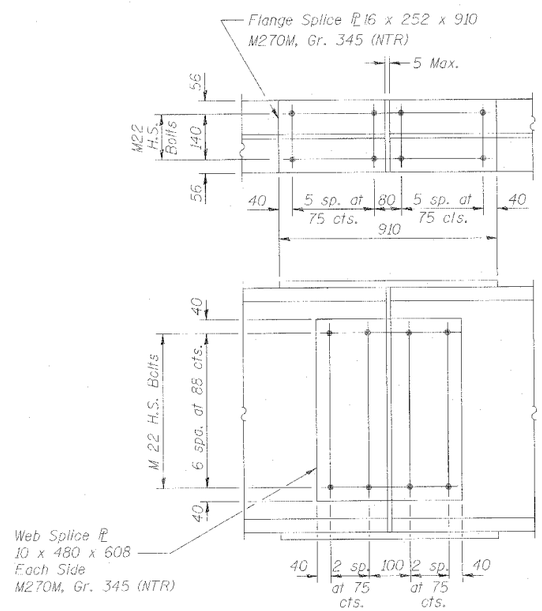

SPLICE

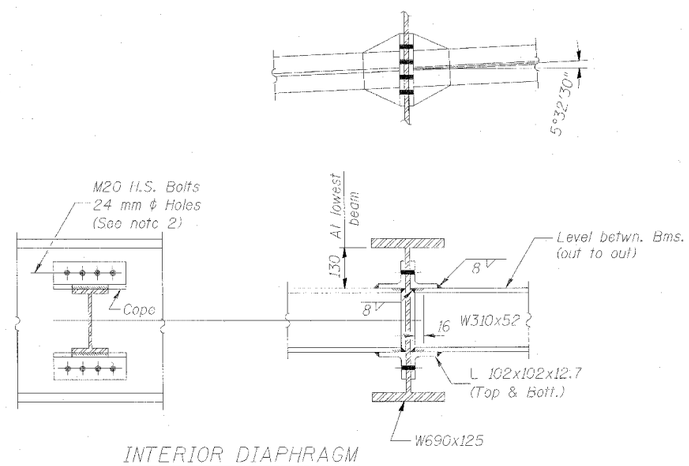

INTERIOR DIAPHRAGM
(50 Required)

NOTES:

1. Two hardened washers shall be required over all oversize holes for diaphragms.
2. 40mm vert. x 24mm slotted holes in angles w/8mm struct. plate washers. Bolts shall be finger tightened prior to the deck pour for stage II constr. Fully tighten bolts after completion of the pour (S. Side of Bm. 3 only)
3. NTR denotes notch toughness requirements.

STRUCTURAL STEEL DETAILS

Date	Designed MR	SOUTH ST. OVER US 14 FAP ROUTE NO. 305 SECTION 28 R-HB-F STATION 29+999.897 COUNTY McHENRY STRUCTURE NO. 056-3015	Sheet No. 12 of 13
Revisions	Drawn R.VEJAR		
	Checked KSM		
	Approved KSM		

HOH® HARRY O. HEFTER-ASSOCIATES, INC. DESIGN AND CONSULTING ENGINEERS — 180 North Wabash Ave. Chicago, Illinois 60601 312/346-8131 — File Name: — Job No. 1962

09/20/2004 08:05:5 AM

G:\PROJECTS\1962\BRIDGE\SIDEWALK REV\BEAM_FAB\1962SI5.dgn

...\BEAM_FAB\1962SI5.dgn 09/20/2004 08:05:51 AM