STATE OF ILLINOIS
DEPARTMENT OF TRANSPORTATION

ROUTE NO.	SECTION	COUNTY	TOTAL SHEETS	SHEET NO.
F.A.P. Rt. 305	28 R-HB-F	McHenry	13	11
FED. ROAD DIST. NO. 1	ILLINOIS	FED. AID PROJECT-		

CONTRACT NUMBER : 62B56

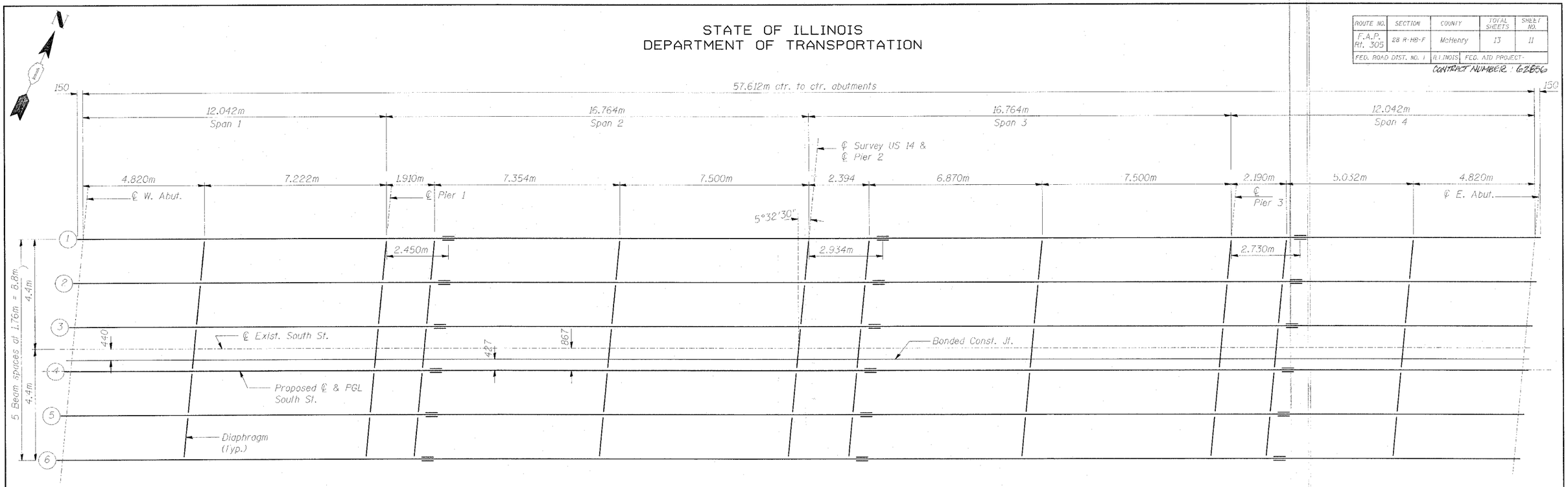

FRAMING PLAN

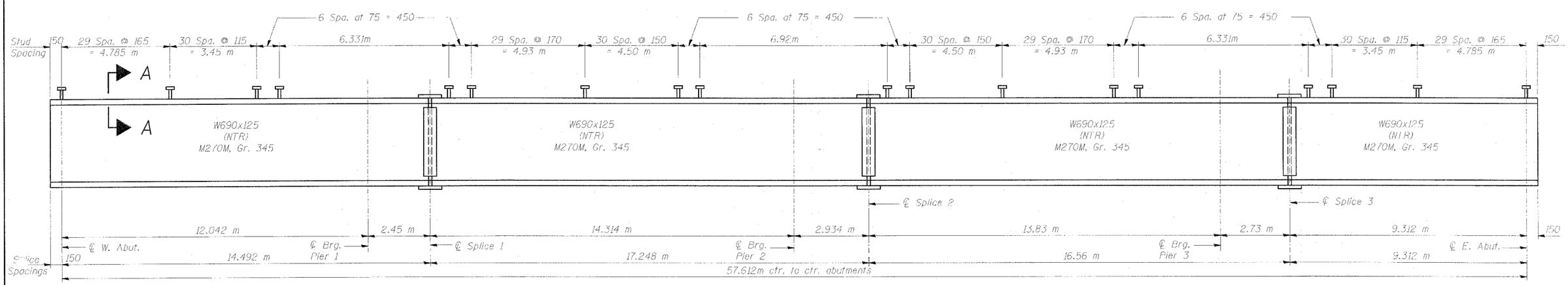

STRINGER ELEVATION

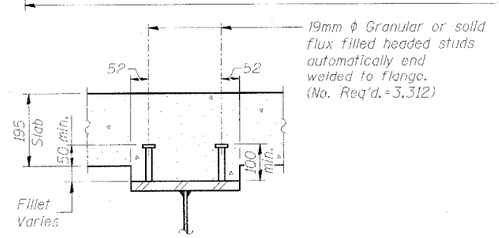

SECTION A-A

SHEAR CONNECTORS ARE NOT PART OF THIS CONTRACT

NOTES:

1. All Structural Steel for Beams and Splice Plates shall be M270M, Gr. 345.
2. "NTR" denotes notch toughness requirements.

STEEL FRAMING PLAN			
Date / Revisions	Designed MR Drawn R.VEJAR Checked KSM Approved KSM	SOUTH ST. OVER US 14 FAP ROUTE NO. 305 SECTION 28 R-HB-F STATION 29+999.897 COUNTY McHENRY STRUCTURE NO. 056-3015	Sheet No. 11 of 13
HOH	HARRY O. HEFTER-ASSOCIATES, INC. DESIGN AND CONSULTING ENGINEERS	180 North Wabash Ave. Chicago, Illinois 60601 312/346-8131	File Name: / Job No. 1962

g:\PROJECTS\1962\BRIDGE\SIDEWALK_REV\BEAM_FAB\1962S14.DGN

...\BEAM_FAB\1962S14.DGN 09/10/2004 11:22:09 AM

09/10/2004 11:22:09 AM