ROUTE NO.	SECTION	COUNTY	TOTAL SHEETS	SHEET NO.
FAP 305	*	Cook	21	21

SHEET NO. 30
37 SHEETS

Contract No. 62852 *1313.1F

STATE OF ILLINOIS
DEPARTMENT OF TRANSPORTATION

Note:
Space reinforcement in cap to miss anchor bolts.
Pour steps monolithically with cap.
All edges shall have standard 3/4" chamfers, except as noted.

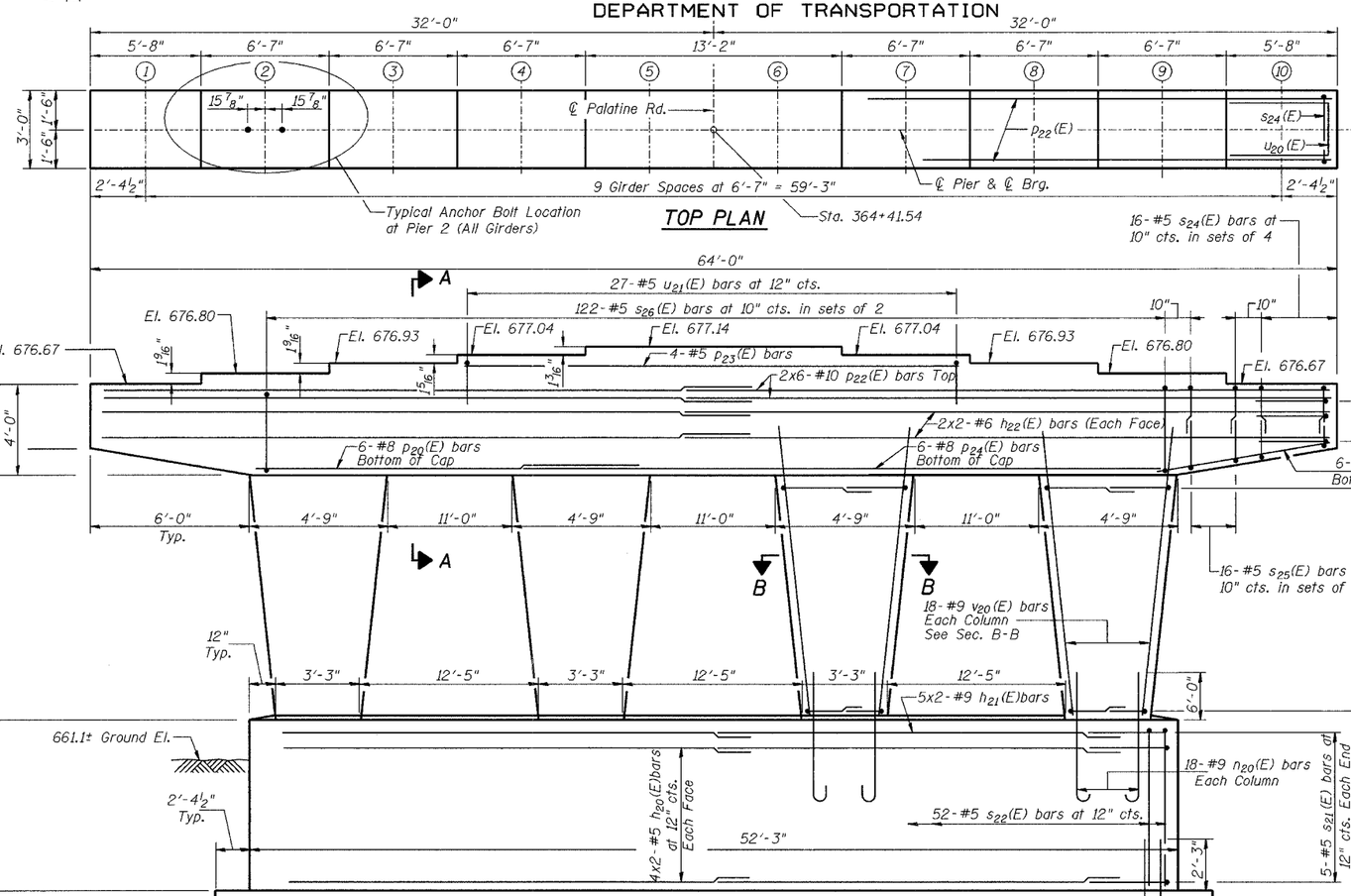

TOP PLAN

ELEVATION
(Looking East)

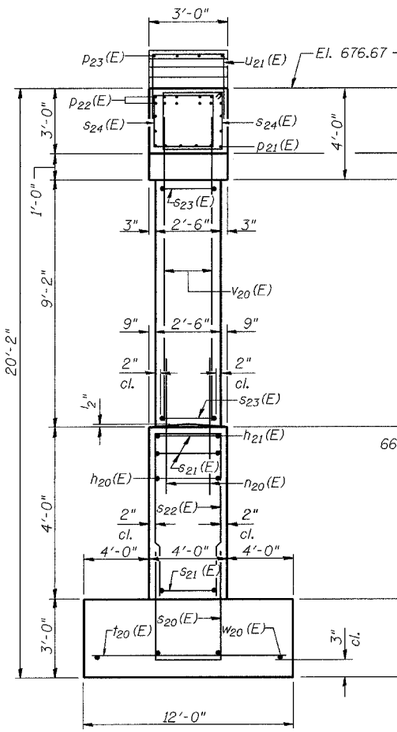

END VIEW

MINIMUM BAR LAPS

#4 = 1'-8"
#5 = 2'-2"
#6 = 2'-7"
#8 = 4'-6"
#9 = 5'-9"
#10 = 7'-3"

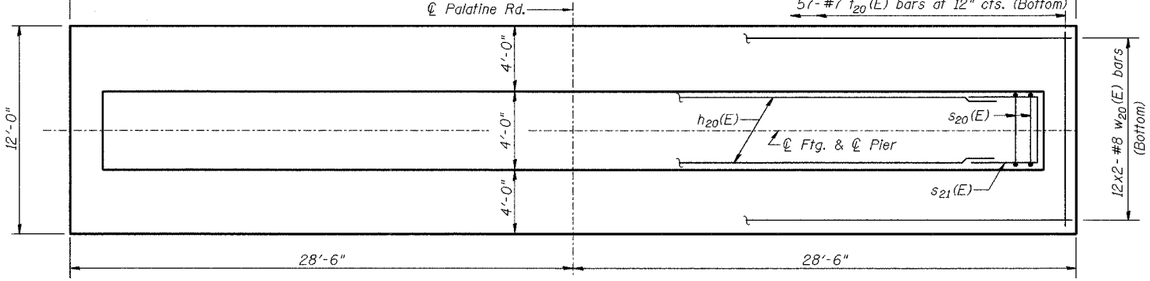

FOOTING PLAN

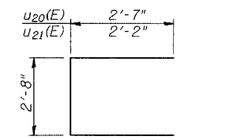

BAR u20(E) & u21(E)

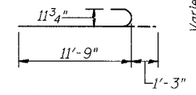

BAR n20(E)

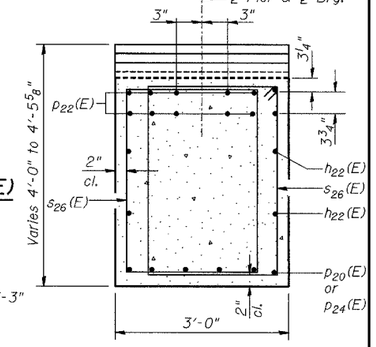

SECTION A-A

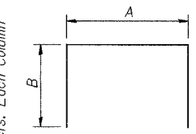

BARS s20(E) thru s25(E)

A & B DIMENSIONS

Bar	A	B
s20(E)	3'-8"	5'-0"
s21(E)	3'-8"	2'-4"
s22(E)	3'-8"	3'-8"
s23(E)	2'-2"	3'-0"
s24(E)	2'-4"	2'-8"
s25(E)	2'-4"	2'-11"

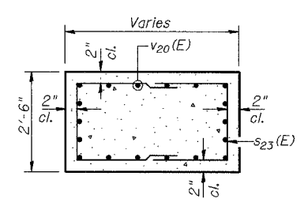

SECTION B-B

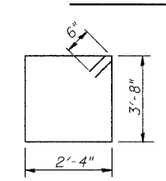

BAR s26(E)

BILL OF MATERIAL

Bar	No.	Size	Length	Shape
h20(E)	16	#5	27'-1"	
h21(E)	10	#9	28'-11"	
h22(E)	8	#6	33'-2"	
n20(E)	72	#9	13'-0"	
p20(E)	6	#8	20'-0"	
p21(E)	12	#8	5'-8"	
p22(E)	24	#10	35'-6"	
p23(E)	4	#5	26'-0"	
p24(E)	6	#8	36'-2"	
s20(E)	52	#5	13'-8"	
s21(E)	10	#5	8'-4"	
s22(E)	52	#5	11'-0"	
s23(E)	72	#4	8'-2"	
s24(E)	32	#5	7'-8"	
s25(E)	32	#5	8'-2"	
s26(E)	122	#5	13'-0"	
t20(E)	57	#7	11'-8"	
u20(E)	6	#6	7'-10"	
u21(E)	27	#5	7'-0"	
v20(E)	72	#9	11'-6"	
w20(E)	24	#8	30'-7"	
Structure Excavation			Cu. Yd.	233.9
Concrete Structures			Cu. Yd.	150.7
Reinforcement Bars, Epoxy Coated			Pound	20,280

Reinforcement Bars designated (E) shall be epoxy coated.
Bars indicates thus 20x3-#6 etc. indicates 20 lines of bars with 3 length per line.

DESIGNED	MJW
CHECKED	GAT
DRAWN	MJW
CHECKED	GAT

PIER NO. 2
PALATINE ROAD OVER
IL. RT. 83 (ELMHURST ROAD)
F.A.P. RTE. 305 SECT. 1313.1F
COOK COUNTY
STATION 363+77.17
STRUCTURE NO. 016-2812

FOR INFORMATION ONLY

P-6 4-30-99

AMERICAN CONSULTING ENGINEERS
CONSULTING ENGINEERS & PLANNERS
CHICAGO, ILLINOIS