STATE OF ILLINOIS
DEPARTMENT OF TRANSPORTATION

ROUTE NO.	SECTION	COUNTY	TOTAL SHEETS	SHEET NO.
FAP 305	*	Cook	21	17

SHEET NO. 23
37 SHEETS

Contract No. 62852 *1313.1F

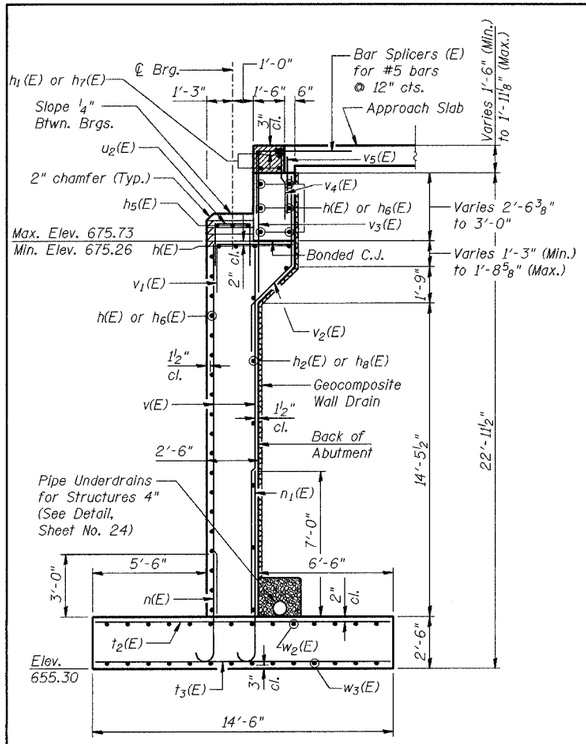

SECTION THRU ABUTMENT

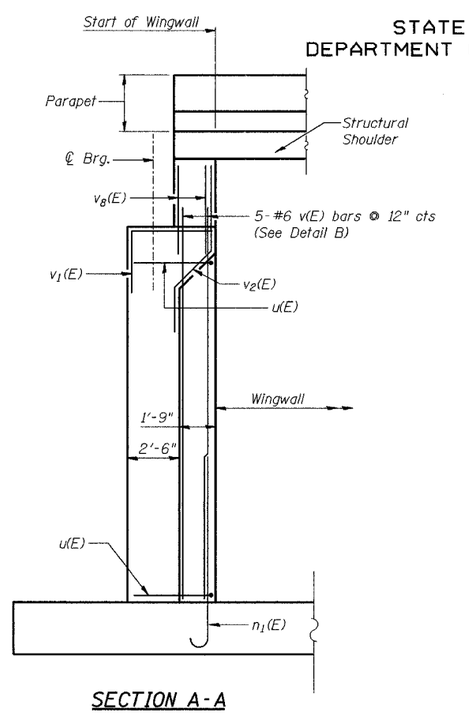

SECTION A-A
(Drainage not shown for clarity)

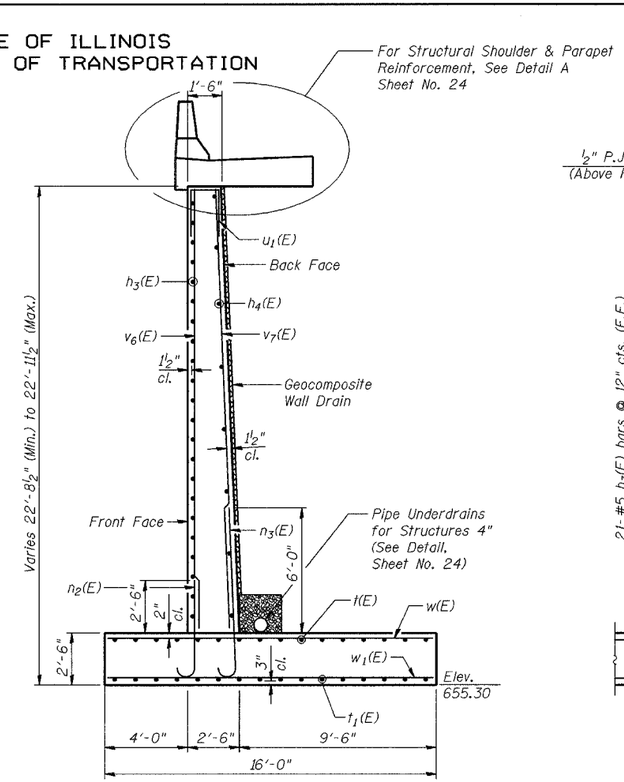

SECTION THRU WING WALL

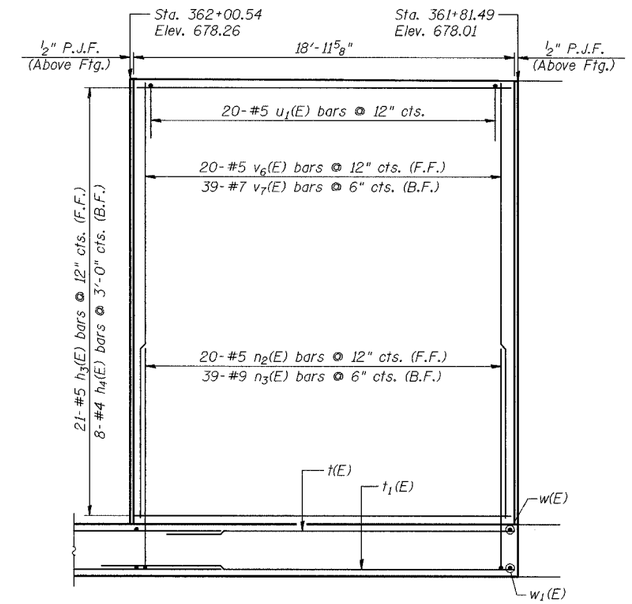

WING WALL ELEVATION

MIN. BAR LAP

#4 - 1'-8"
#5 - 2'-2"
#6 - 2'-7"
#7 - 3'-5"
#8 - 4'-6"
#9 - 5'-9"

LEGEND

F.F. = Front Face
B.F. = Back Face

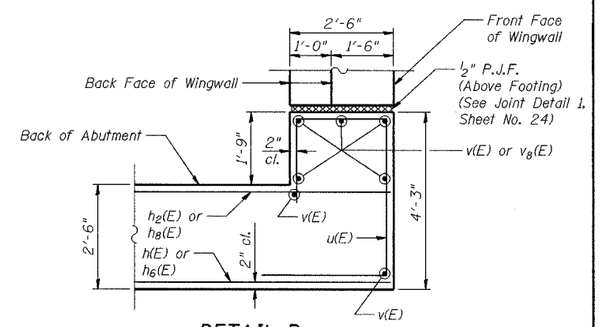

DETAIL B
(Drainage not shown for clarity)

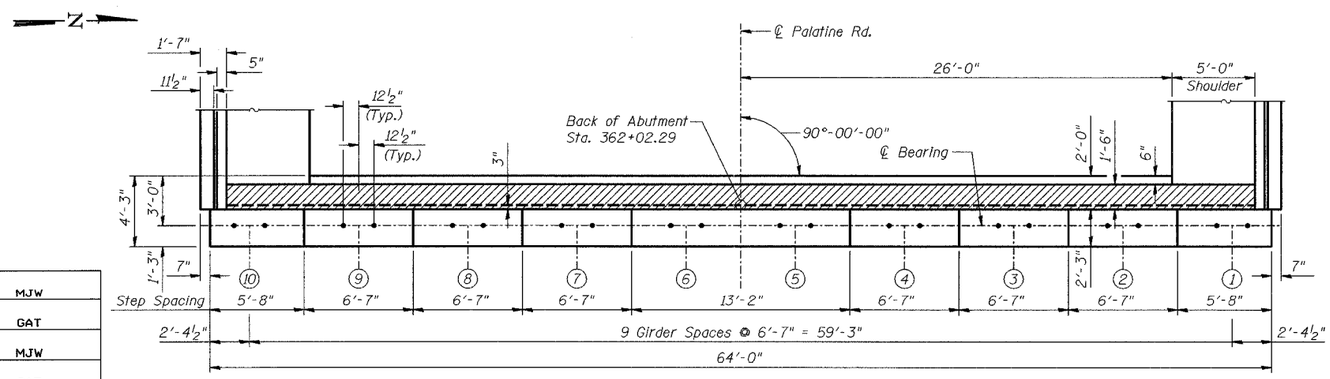

TOP VIEW

Notes:

Reinforcement bars designated (E) shall be epoxy coated.

All edges shall have standard ¾" chamfers except as noted.

Pour steps monolithically with cap.

Hatched area to be poured after superstructure forms have been removed. Quantity of concrete included with "Concrete Superstructure".

Space reinforcement in cap to miss Anchor Bolts.

Work this sheet with Sheet No. 22 and No. 24.

DESIGNED	MJW
CHECKED	GAT
DRAWN	MJW
CHECKED	GAT

FOR INFORMATION ONLY

WEST ABUTMENT DETAILS - I
PALATINE ROAD OVER
IL. RT. 83 (ELMHURST ROAD)
F.A.P. RTE. 305 SECT. 1313.1F
COOK COUNTY
STATION 363+77.17
STRUCTURE NO. 016-2812

AMERICAN CONSULTING ENGINEERS
CONSULTING ENGINEERS & PLANNERS
CHICAGO, ILLINOIS