STATE OF ILLINOIS
DEPARTMENT OF TRANSPORTATION

ROUTE NO.	SECTION	COUNTY	TOTAL SHEETS	SHEET NO.
FAP 305	*	Cook	21	11

SHEET NO. 17
37 SHEETS

Contract No. 62852 *1313.1F

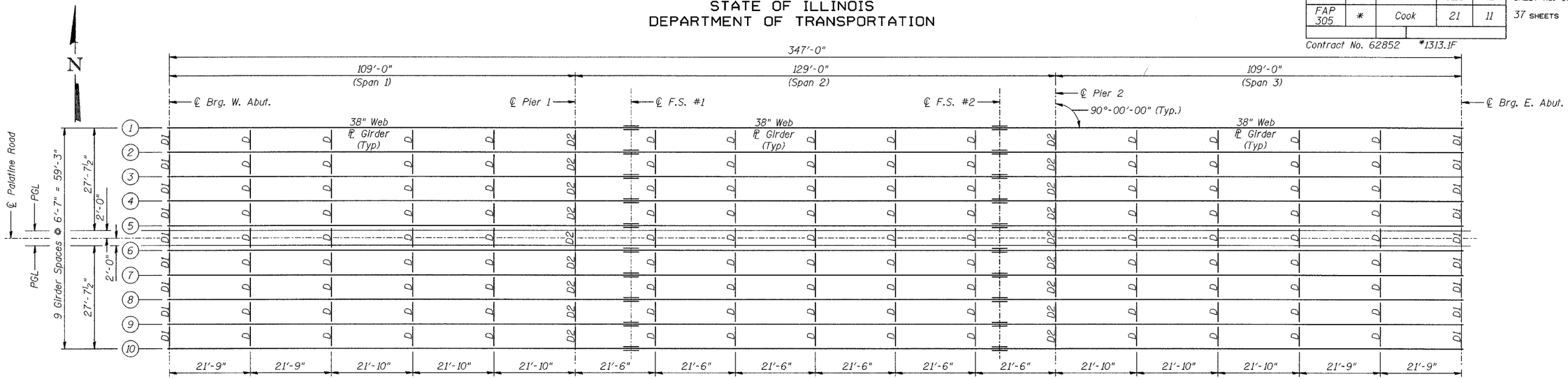

FRAMING PLAN

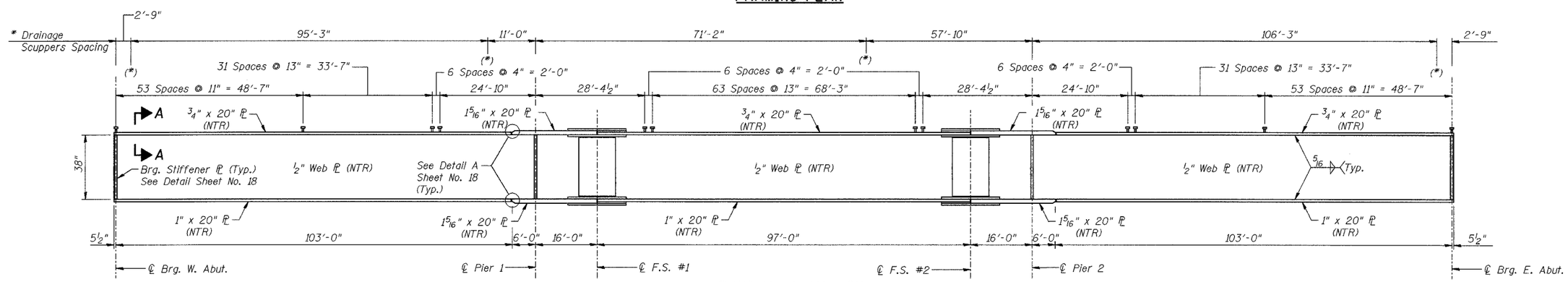

GIRDER ELEVATION

(Girders Stiffeners and Splice Plates shall be AASHTO M 270, Grade 50.)
("NTR" denotes plates to which notch toughness requirements are applicable.)

* Note: Arrange Shear Studs to clear each side of Drainage Scupper by 3" (min.) at Girders 1 and 10.

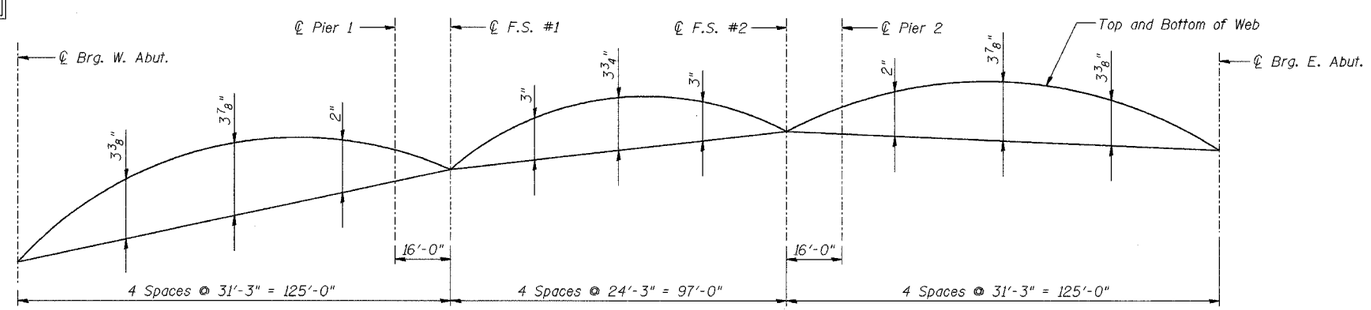

CAMBER DIAGRAM

NOTES:

1. For Top of Web Elevations, See Sheet No. 18.
2. For Section A-A, See Sheet No. 18.

DESIGNED	MJW
CHECKED	GAT
DRAWN	MJW
CHECKED	GAT

SHEAR CONNECTORS ARE NOT INCLUDED IN THIS CONTRACT

FRAMING PLAN
PALATINE ROAD OVER
IL. RT. 83 (ELMHURST ROAD)
F.A.P. RTE. 305 SECT. 1313.1F
COOK COUNTY
STATION 363+77.17
STRUCTURE NO. 016-2812

AMERICAN CONSULTING ENGINEERS
CONSULTING ENGINEERS & PLANNERS
CHICAGO, ILLINOIS