ROUTE	SECTION	COUNTY	TOTAL SHEETS	SHEET NUMBER
FAU 2586	2004-0321	DUPAGE	14	9

CONTRACT: 62769

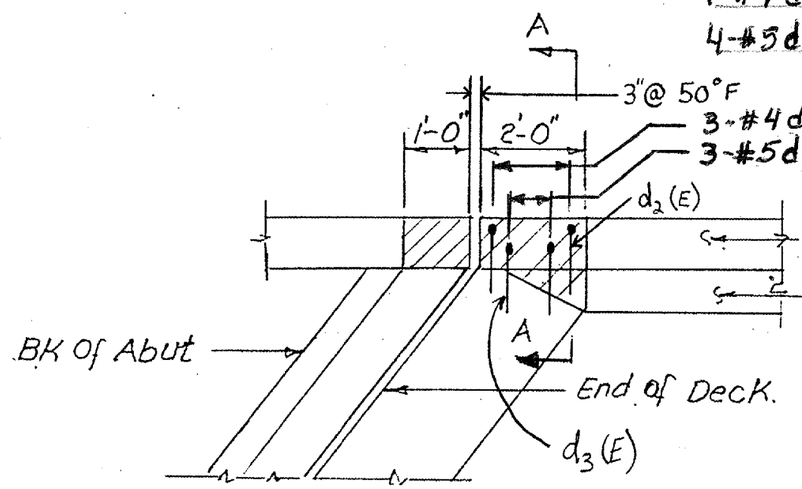

AT WEST ABUTMENT

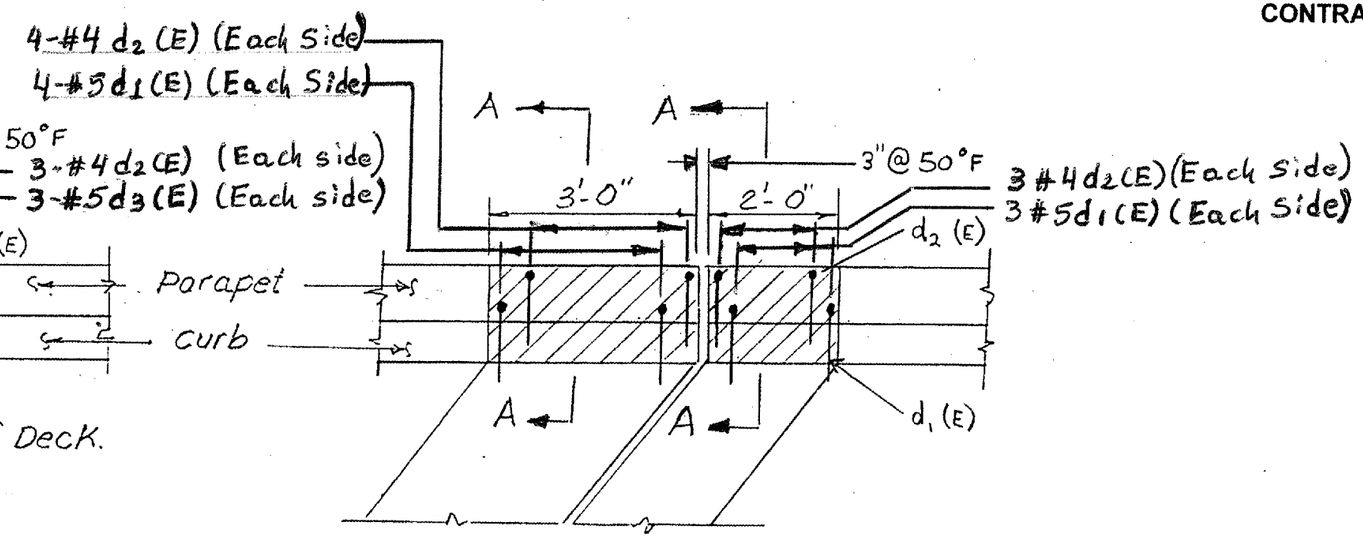

AT LINK CONNECTION

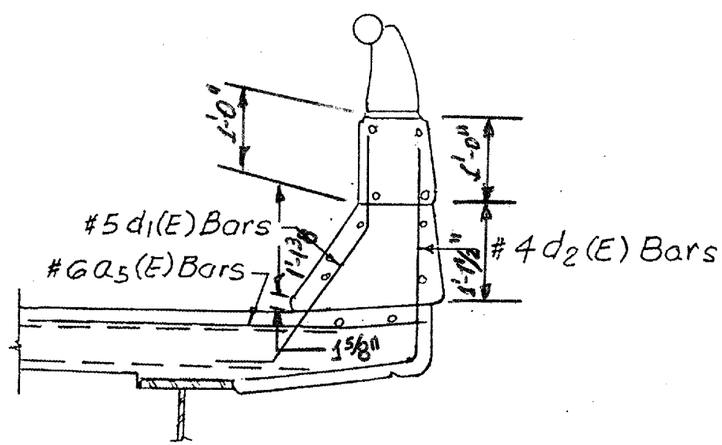

SECTION A-A

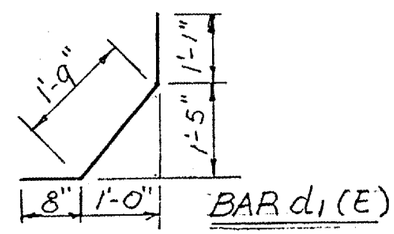

BAR d_1 (E)

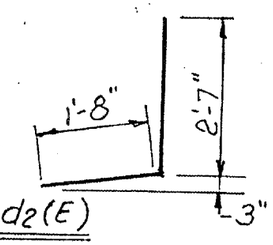

BAR d_2 (E)

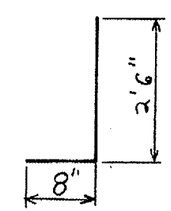

BAR d_3 (E)

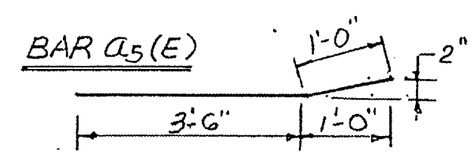

BAR a_5 (E)

PARAPET DETAILS

ILLINOIS DEPARTMENT OF TRANSPORTATION

PROPOSED EXPANSION JOINT