ROUTE	SECTION	COUNTY	TOTAL SHEETS	SHEET NUMBER
FAU 2586	2004-032I	DUPAGE	14	8

CONTRACT: 62769

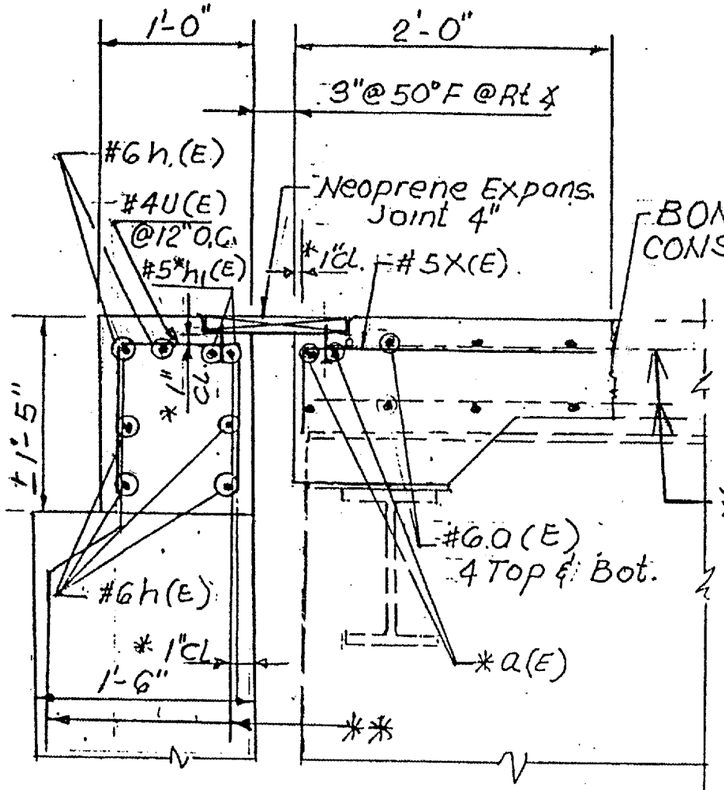

AT WEST ABUTMENT

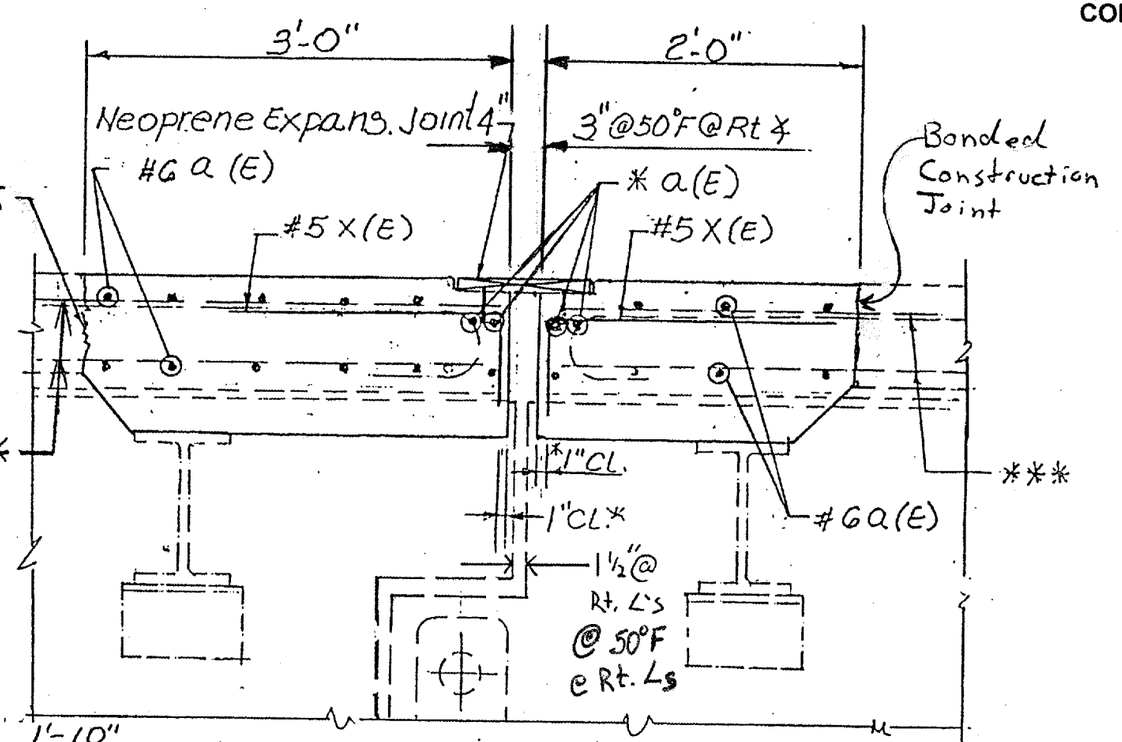

AT LINK CONNECTION

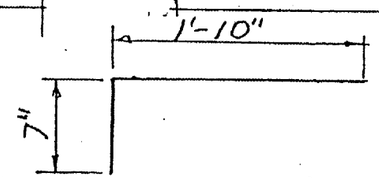

Bar X(E)

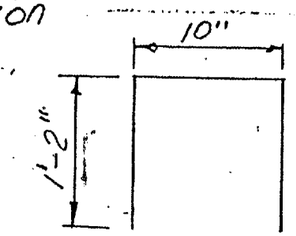

Bar U(E)

** Existing Vertical Reinforcement To Be Cleaned Straightened & Incorporated Into New Construction

*** Existing Longitudinal Rebar To Be Cleaned Straightened And Incorporated Into New Construction

* Place a(E) & h1 (E) Bars In Back Of Anchor Bolts As Shown. If req'd To Maintain 1" CL. (+0-8"). Anchor Bolts Shall Be Tied To a(E) or h1(E) Bars.

Note: Joint Openings Shall Be Adjusted According to Article 503.10(C) OF Standard Specification When The deck Is Poured At An Ambient Temperature Other Than 50°F

PROPOSED EXPANSION JOINT

ILLINOIS DEPARTMENT OF TRANSPORTATION

PROPOSED EXPANSION JOINT