F.A.U. RTE.	SECTION	COUNTY	TOTAL SHEETS	SHEET NO.
2697	3363 RS-1	COOK	36	19
FED. ROAD DIST. NO. 1	ILLINOIS	HIGHWAY PROJECT		

CONTRACT NO. 62706

STATE OF ILLINOIS
DEPARTMENT OF TRANSPORTATION

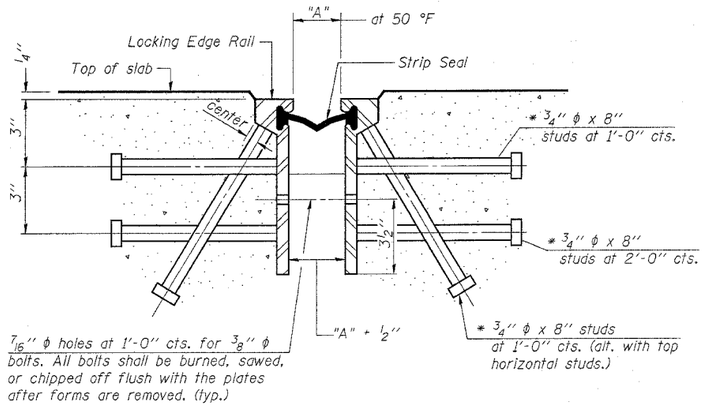

Required Strip Seal rated movement	"A"
1"	1 1/8"
2"	1 3/4"

SECTION THRU ROLLED RAIL EXP. JOINT

(356 Studs Required)

* Granular or solid flux filled headed studs conforming to Article 1006.32 of the Std. Specs., automatically end welded.

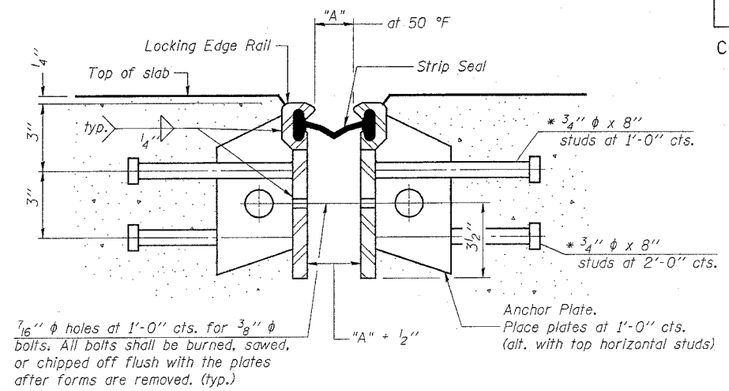

SECTION THRU WELDED RAIL EXP. JOINT

(212 Studs Required)
(142 Anchor Plates Required)

GENERAL NOTES

The strip seal shall be made continuous and shall have a minimum thickness of 1/4". The configuration of the strip seal shall match the configuration of the Locking Edge Rails.

The height and thickness of the Locking Edge Rails shown are minimum dimensions. The actual configuration of the Locking Edge Rails and matching strip seal may vary from manufacturer to manufacturer. Flanged edge rails will not be allowed.

Locking Edge Rails may be spliced at slope discontinuities and stage construction joints.

The manufacturer's recommended installation methods shall be followed.

The joint opening and deck dimensions detailed on the superstructure are based on a preformed joint seal. If the contractor elects to use the alternate strip seal joint, the opening and deck dimensions shall be modified according to the dimensions detailed on this sheet. Required modifications shall be made at no additional cost to the State.

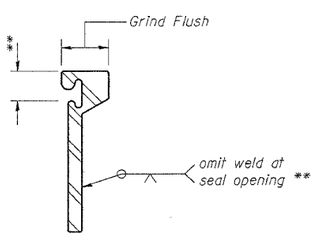

LOCKING EDGE RAIL SPLICE

The inside of the locking edge rail groove shall be free of weld residue.

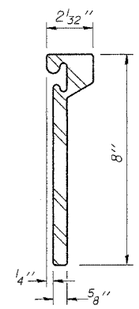

ROLLED (EXTRUDED) RAIL

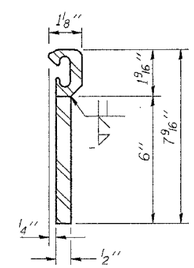

WELDED RAIL

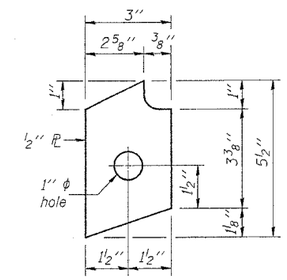

ANCHOR PL

(for welded rail)

LOCKING EDGE RAILS

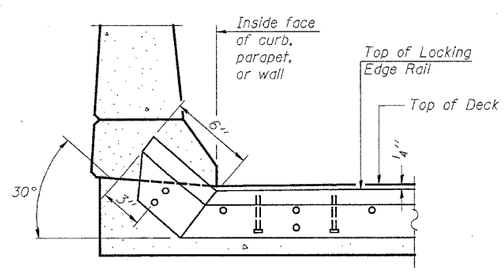

AT CURB, PARAPET, OR WALL

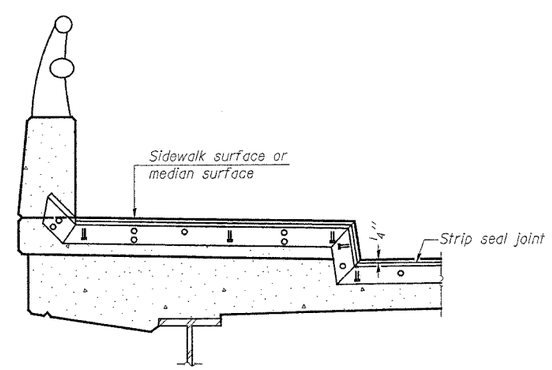

AT SIDEWALK OR MEDIAN*

* Shorter plates with a single row of studs at 12" centers may be necessary on medians which are shallower than 9". See manufacturer's recommendation.

TYPICAL END TREATMENTS

(Sheet 2 of 2)

REVISIONS	
NAME	DATE

ILLINOIS DEPARTMENT OF TRANSPORTATION

BRIDGE JOINT SYSTEM - EXPANSION (ALTERNATE-STRIP SEAL)

WILLOW SPRINGS
SN 016-0537

SCALE: NONE
DATE 8/25/2004
DRAWN BY S.E.S.
CHECKED BY

8/25/2004
c:\projects\dlll804\dlll804aa.m32
schilkese

EJ-BJS 9-01-03

14:50:03 08/25/2004