| F.A.U. RTE. | SECTION | COUNTY | TOTAL SHEETS | SHEET NO. |
|---|---|---|---|---|
| 2697 | COOK | COOK | 36 | 6 |
| FED. ROAD DIST. NO. 7 | ILLINOIS | FED. AID PROJECT | | |

CONTRACT NO. 62706

WILLOW SPRINGS

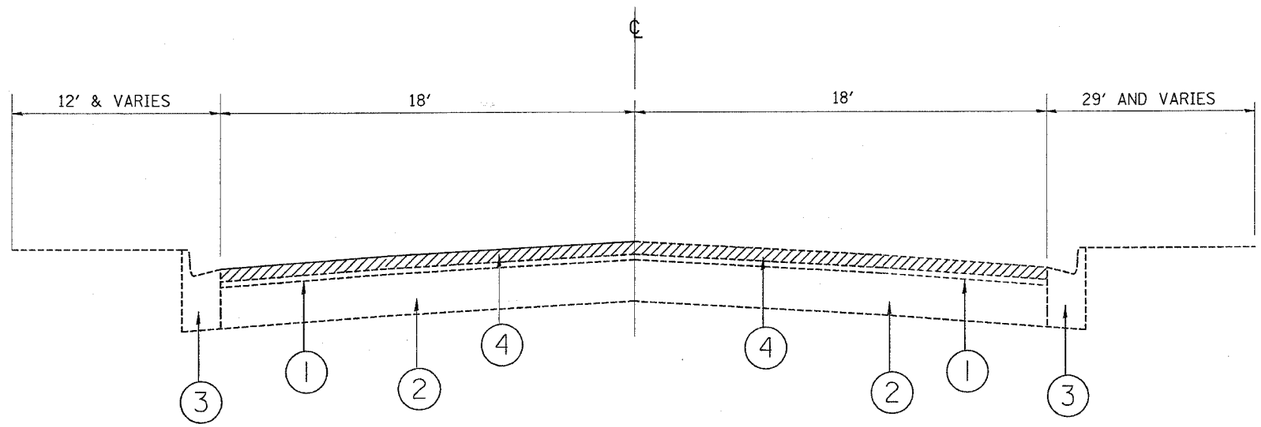


EXISTING TYPICAL CROSS SECTION
STA. 147+37 TO STA. 158+90

## LEGEND

1. EXISTING BITUMINOUS CONCRETE SURFACE ± 6"
2. EXISTING PCC PAVEMENT ± 9"
3. EXISTING CURB & GUTTER
4. PROPOSED BITUMINOUS SURFACE REMOVAL, 2¼"
5. PROPOSED POLYMERIZED LEVELING BINDER (MACHINE METHOD), SUPERPAVE IL-4.75, N50, ¾"
6. PROPOSED BITUMINOUS CONCRETE SURFACE COURSE, SUPERPAVE, MIXTURE D, 1½"

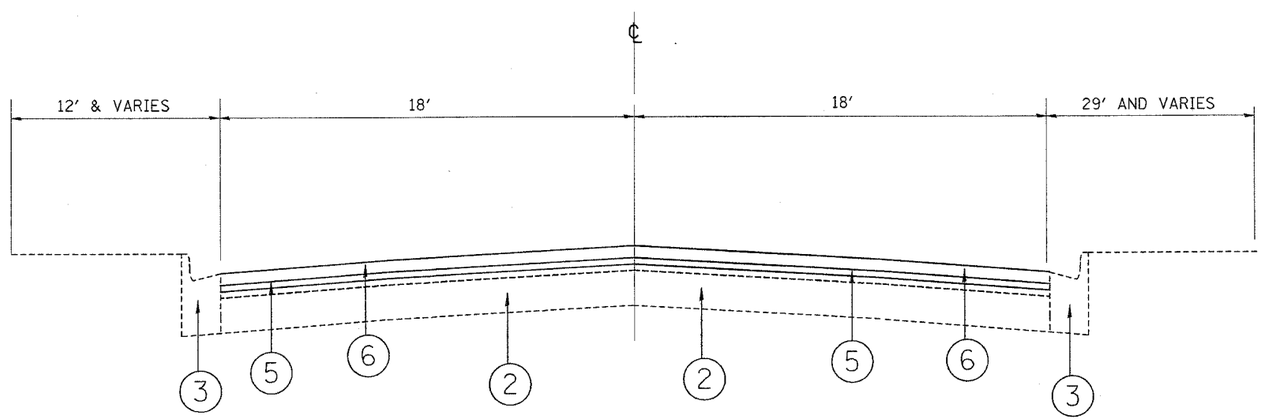


PROPOSED TYPICAL CROSS SECTION
STA. 147+37 TO STA. 158+90

| REVISIONS NAME | DATE |
|---|---|
| | |

ILLINOIS DEPARTMENT OF TRANSPORTATION

EXISTING AND PROPOSED TYPICAL SECTIONS

WILLOW SPRINGS RD.

SCALE NONE — DRAWN BY S.E.S.

DATE 8/26/2004 — CHECKED BY