F.A.I. RTE.	SECTION	COUNTY	TOTAL SHEETS	SHEET NO.
VAR	2003-038GR	VAR	16	15
STA.		TO STA.		
FED. ROAD DIST. NO. 7	ILLINOIS		FED. AID PROJECT	

Contract 62602

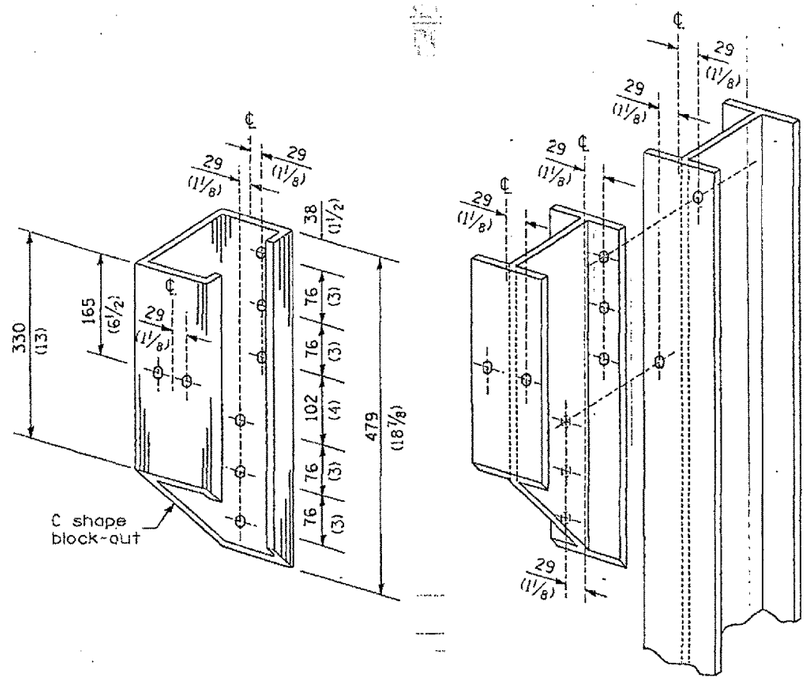

STEEL BLOCK-OUT AND
STEEL POST DETAILS

REVISIONS	
NAME	DATE

ILLINOIS DEPARTMENT OF TRANSPORTATION

STEEL PLATE BEAM GUARDRAIL
STEEL BLOCK-OUT DETAIL

SCALE: VERT.
HORIZ.

DATE

DRAWN BY
DESIGNED BY
CHECKED BY