R.A. NO.	SECTION	COUNTY	TOTAL SHEETS	SHEET NO.
	VAR2003-038 GRR	*	16	12
STA.		ROUTE		
REALIGNED ROA. NO.		LOCATION	FED. AID PROJECT	

* WILL, KENDAL, KANE, DU PAGE AND COOK

CONTRACT 62602

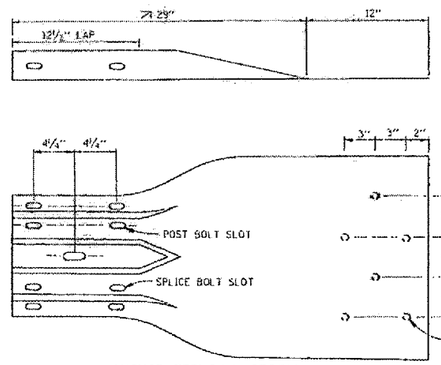

ANCHOR TERMINAL SECTION DETAIL

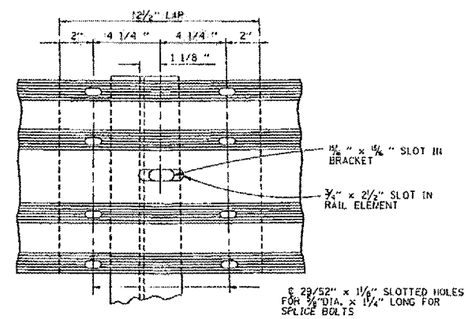

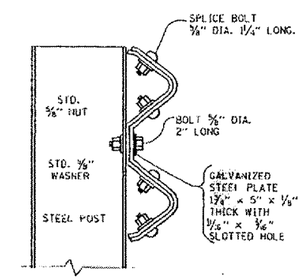

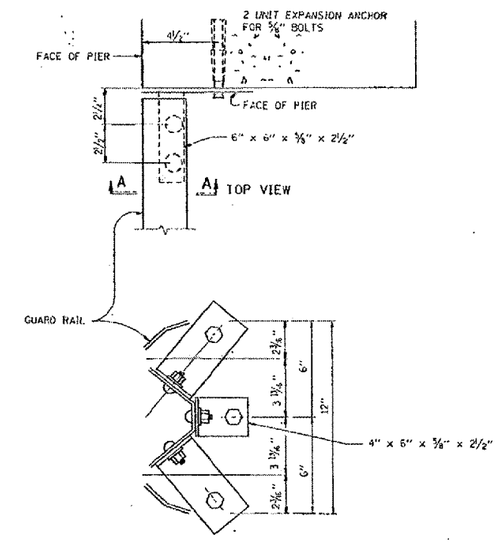

SECTION A-A

SCALE 4"= 1'

DETAIL OF CONNECTION OF GUARDRAIL TO SQUARE BRIDGE PIER OR FOUNDATION.

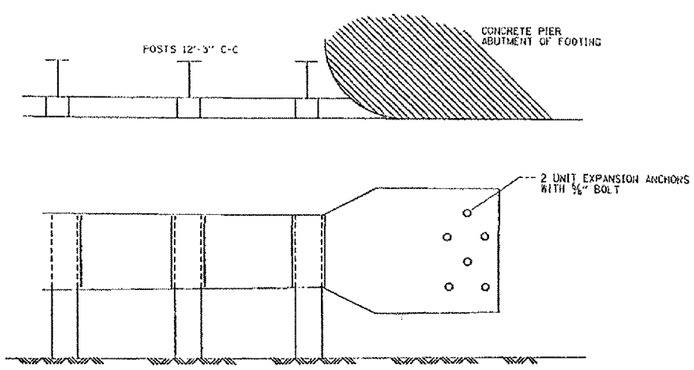

TYPICAL INSTALLATION

DETAIL OF CONNECTION OF GUARDRAIL TO ROUNDED BRIDGE PIER OR FOUNDATION

THIS SHEET IS FOR INFORMATION ONLY

REVISIONS	
NAME	DATE
CREATED	10-31-88

ILLINOIS DEPARTMENT OF TRANSPORTATION

DETAIL OF GUARDRAIL SUPPORT AND END ANCHORAGE

SCALE: NONE

DATE: 9/14/2004

DRAWN BY R.F.L.

CHECKED BY

9/14/2004
c:\projects\m1061888\m061888bb.m32
VI-BM7-N