R. A. RTE.	SECTION	COUNTY	TOTAL SHEETS	SHEET NO.
VAR.	2003-038 GRR	*	16	11
STA.	TO STA.			
FED. ROAD DIST. NO.	ILLINOIS	FED. AID PROJECT		

* WILL, KENDAL, KANE, DU PAGE AND COOK
CONTRACT 62602

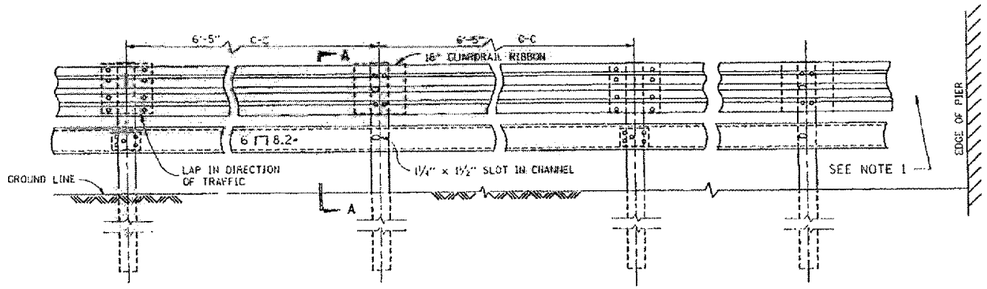

ELEVATION

DETAIL OF END SECTION

NOTE 1:
FOR DETAILS OF GUARDRAIL END ANCHORAGE AT PIERS, SEE SHEET NO. ___

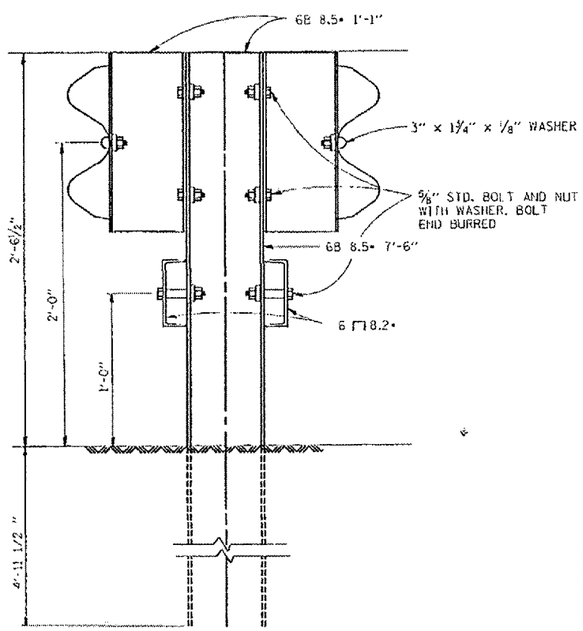

SECTION A-A

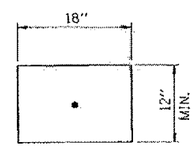

18" GUARDRAIL ELEMENT SPLICE

NOTE:
FOR DETAIL OF RAIL ELEMENT, RAIL SPLICING, BOLT, AND NUT, SEE STATE STANDARD 630001.
A 1⅜" x 3" x ⅛" STEEL PLATE WASHER AS SHOWN ON THIS DRAWING SHALL BE PLACED BETWEEN THE BOLT HEAD AND THE GUARDRAIL RIBBON AT ALL MOUNTING POINTS.
AN 18" PIECE OF GUARDRAIL RIBBON SHALL BE INSERTED BETWEEN THE CONTINUOUS RIBBON AND THE POST AT NON-SLICE MOUNTING POINTS.
RAIL, CHANNELS, POSTS, BASE PLATES, FASTENINGS, AND ALL OTHER EXPOSED ACCESSORIES SHALL BE GALVANIZED.

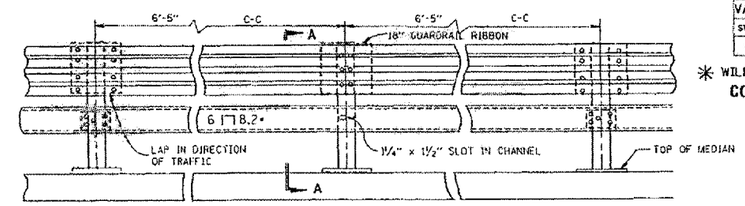

ELEVATION

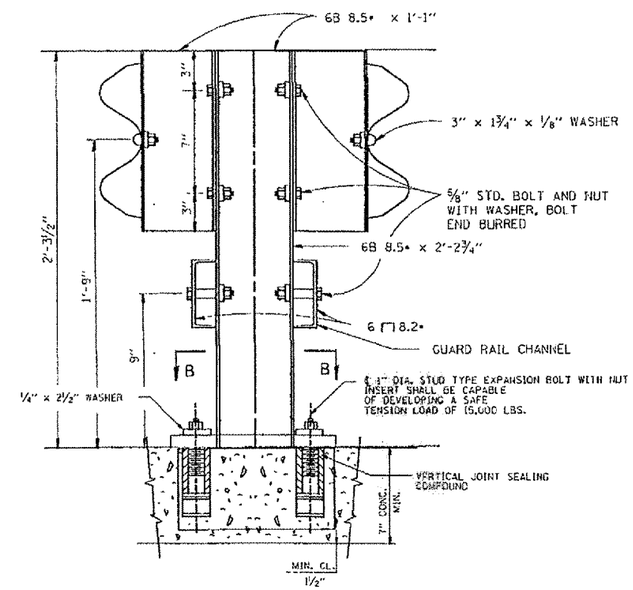

SECTION A-A
ANCHORAGE DETAIL

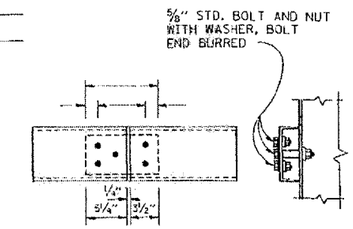

CHANNEL SPLICE
PLATE 8¾" x 4½" x ¼"

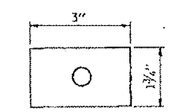

WASHER
PLATE 3" x 1¾" x ⅛"

NOTE:
ALL WELDS SHALL BE GROUND SMOOTH.
POSTS SHALL BE CUT AND WELDED TO THE BASE PLATE SO THAT THE POSTS WILL BE PLUMB WHEN ERECTED.

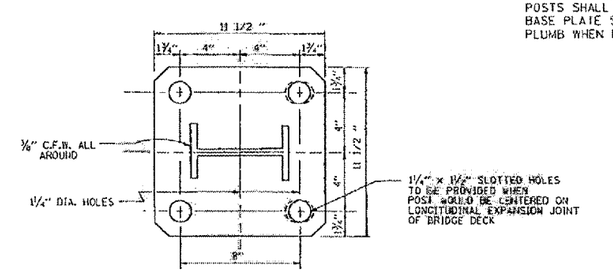

RAIL POST BASE PLATE
℄ 11½" x 1¼" x 11½"

SECTION B-B

REVISIONS	
NAME	DATE

ILLINOIS DEPARTMENT OF TRANSPORTATION

STEEL PLATE BEAM GUARDRAIL SPECIAL

SCALE: NONE
DATE: 9/14/2004
DRAWN BY R.F.L.
CHECKED BY

THIS SHEET IS FOR INFORMATION ONLY

9/14/2004
c:\projects\n106188\n06188bb.m32
V1=BM5-N