F.A. RTE.	SECTION	COUNTY	TOTAL SHEETS	SHEET NO.
VAR	2003-037GR	VAR	17	16
STA.		TO STA.		
FED. ROAD DIST. NO. 7	ILLINOIS	FED. AID PROJECT		

Contract 62601

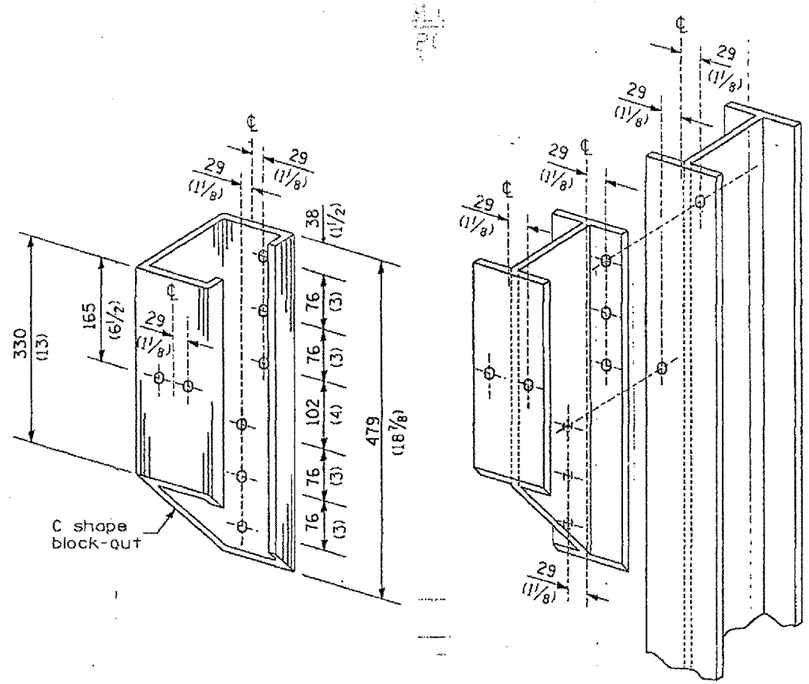

STEEL BLOCK-OUT AND
STEEL POST DETAILS

REVISIONS	
NAME	DATE

ILLINOIS DEPARTMENT OF TRANSPORTATION

STEEL PLATE BEAM GUARDRAIL
STEEL BLOCK-OUT DETAIL

SCALE: VERT.
HORIZ.

DATE

DRAWN BY
DESIGNED BY
CHECKED BY