F.A. RTE.	SECTION	COUNTY	TOTAL SHEETS	SHEET NO.
VAR.	2003-038 GRR	*	17	8
STA.	TO STA.			

* MC HENRY, LAKE, KANE, DU PAGE AND COOK

CONTRACT 62601

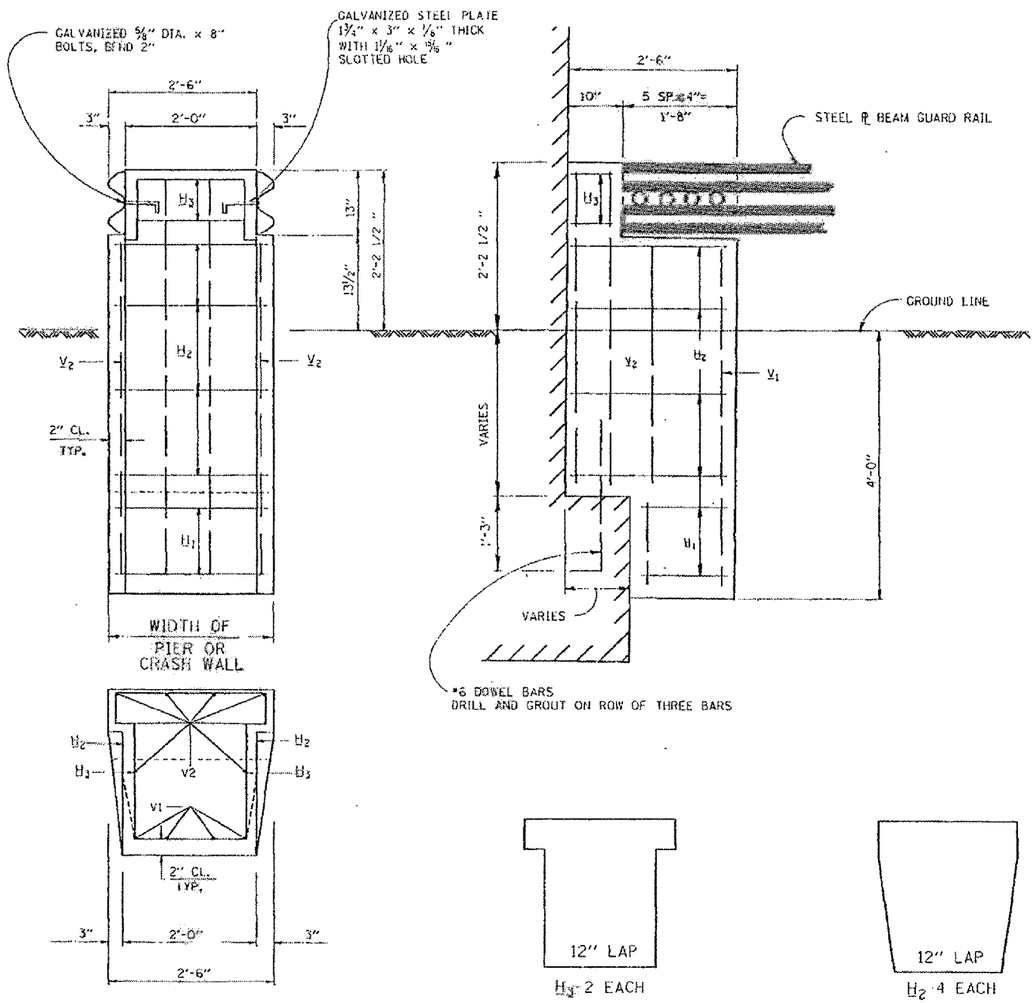

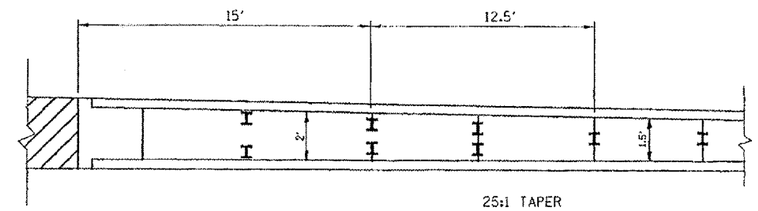

GUARD RAIL TRANSITIONS

NOTES: CLASS SI CONCRETE SHALL BE USED THROUGHOUT
REINFORCEMENT TO BE SIZE #4 UNLESS OTHERWISE NOTED

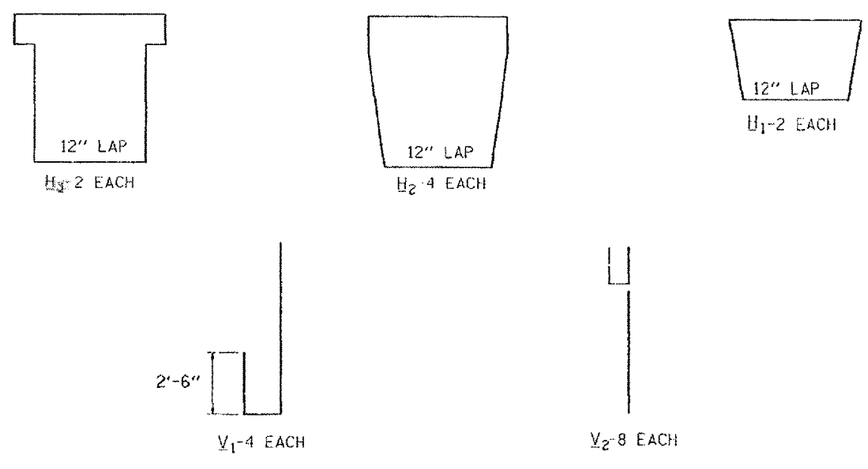

REVISIONS	
NAME	DATE
CREATED	10-31-88

ILLINOIS DEPARTMENT OF TRANSPORTATION

TYPICAL DETAILS FOR STEEL PLATE BEAM GUARDRAIL ANCHORAGE REPAIR

SCALE: NONE

DATE: 9/14/2004

DRAWN BY R.F.L.

CHECKED BY

9/14/2004
c:\projects\mi06188\m06188bb.m32
VI=BM4-N

BM-4